Changes for the Better

MITSUBISHI ELECTRIC

SPLIT-TYPE, HEAT PUMP AIR CONDITIONERS

July 2006

No. OCS05
REVISED EDITION-B

TECHNICAL DATA BOOK R410A

<Indoor unit>

[Model names]

INVERTER

PLA-RP·AA
PLA-RP·AA2
PEAD-RP·EA
PEAD-RP·EA2
PEAD-RP·GA
PKA-RP·GAL
PKA-RP·FAL
PKA-RP·FAL2
PCA-RP·GA
PCA-RP·GA2
PCA-RP·HA
PSA-RP·GA

Revision:
- PKA-RP50FAL2 and PCA-RP50GA2 are added.
- Some descriptions have been modified.

- Please void OCS05 REVISED EDITION-A.

<Outdoor unit>

[Model names]

PUHZ-RP35/50/60/71/100/125/140VHA2
PUHZ-RP100/125/140YHA2

CONTENTS

1. REFERENCE SERVICE MANUAL ····· 2
2. SPECIFICATIONS ····· 3
3. OUTLINES AND DIMENSIONS ····· 23
4. WIRING DIAGRAM ····· 42
5. REFRIGERANT SYSTEM DIAGRAM ····· 54
6. PERFORMANCE CURVES ····· 57
7. CORRECTION FACTORS ····· 59
8. APPLICABLE EXTENSION PIPE FOR EACH MODEL ····· 60
9. AIR FLOW DATA ····· 64
10. NOISE CRITERION CURVES ····· 78
11. OPTIONAL PARTS ····· 87

kW Model

Mr.SLIM™

1 REFERENCE SERVICE MANUAL

For information on service, please refer to the service manual as follows.

1-1. INDOOR UNIT

Model name	Service Ref.	Service Manual No.
PLA-RP35/50/60/71AA	PLA-RP35/50/60/71AA.UK	OC335
	PLA-RP35/50/60/71AA	OC327
PLA-RP100/125/140AA2	PLA-RP100/125/140AA2.UK	OC357
PCA-RP50/60/71/100/125/140GA PCA-RP50GA2	PCA-RP50/60/71/100/125/140GA PCA-RP50GA2	OC328
PCA-RP71/125HA	PCA-RP71/125HA	OC329
PKA-RP35/50GAL	PKA-RP35/50GAL	OC330
PKA-RP60/71/100FAL PKA-RP50FAL2	PKA-RP60/71/100FAL PKA-RP50FAL2	OC331
PSA-RP71/100/125/140GA	PSA-RP71/100/125/140GA	OC332
PEAD-RP50/60/71/125/140EA PEAD-RP35/100EA2	PEAD-RP50/60/71/125/140EA.UK PEAD-RP35/100EA2.UK	HWE05210
PEAD-RP60/71/100GA	PEAD-RP60/71/100GA.UK	HWE05060

1-2. OUTDOOR UNIT

Model name	Service Ref.	Service Manual No.
PUHZ-RP35/50/60/71VHA2 PUHZ-RP100/125/140VHA2 PUHZ-RP100/125/140YHA2	PUHZ-RP35/50/60/71VHA2 PUHZ-RP100/125/140VHA2 PUHZ-RP100/125/140YHA2	OC374

2 SPECIFICATIONS

2-1. CEILING CASSETTE TYPE

Model name	Indoor unit		PLA-RP35AA	PLA-RP50AA
	Outdoor unit		PUHZ-RP35VHA2	PUHZ-RP50VHA2
Cooling	Capacity	Btu/h	12,300	17,100
		kW	3.6(1.6-4.5)	5.0(2.3-5.6)
	Total input	kW	1.07	1.55
	EER		3.36	3.23
	Energy label class		A	A
	SHF		0.89	0.86
Heating	Capacity	Btu/h	14,000	20,500
		kW	4.1(1.6-5.2)	6.0(2.5-7.3)
	Total input	kW	1.12	1.62
	COP		3.66	3.70
	Energy label class		A	A
	Booster heater	kW	-	-
Power supply	Phase	ϕ	1	
	Cycle	Hz	50	
	Voltage	V	230	
	Breaker size	A	16	
Indoor unit	Air flow	CMM	11-12-13-14	14-15-16-18
	(Low-Medium2-Medium1-High)	CFM	390-425-460-495	495-530-565-635
	External pressure	Pa	0	0
	Sound level (Low-Medium2-Medium1-High)	dB(A)	27-28-29-31	28-29-31-33
	External finish (Panel)		White Munsell 0.70Y 8.59/0.97	
	Dimension Unit (Panel)	W : mm	840 (950)	
		D : mm	840 (950)	
		H : mm	258 (30)	
		W : inch	33-1/16 (37-3/8)	
		D : inch	33-1/16 (37-3/8)	
		H : inch	10-3/16 (1-3/16)	
	Weight Unit (Panel)	kg	24 (5)	
		lbs	53 (11)	
	Unit drain pipe I.D.	mm	32	
		inch	1-1/4	
Outdoor unit	Air flow	CMM	35	
		CFM	1,240	
	Sound level at cooling	dB(A)	44	
	Sound level at heating	dB(A)	46	
	External finish		Ivory Munsell 3Y 7.8/1.1	
	Dimension	W : mm	800	
		D : mm	300+23	
		H : mm	600	
		W : inch	31-1/2	
		D : inch	11-13/16 + 7/8	
		H : inch	23-5/8	
	Weight	kg	45	
		lbs	99	
Refrigerant pipe size	Gas side O.D.	mm	12.7	
		inch	1/2	
	Liquid side O.D.	mm	6.35	
		inch	1/4	
Refrigerant pipe length	Height difference	m	Max. 30	
	Length	m	Max. 50	

NOTE:

1. Rating conditions (ISO T1)
   Cooling Indoor : D.B. 27℃ (80˚F) W.B. 19℃ (66˚F) Outdoor : D.B. 35℃ (95˚F) W.B. 24℃ (75˚F)
   Heating Indoor : D.B. 20℃ (68˚F) Outdoor : D.B. 7℃ (45˚F) W.B. 6℃ (43˚F)
   Refrigerant piping length (one way) : 5m (16ft.)
2. Guaranteed operating range

		Indoor	Outdoor
Cooling	Upper limit	D.B. 35˚C, W.B. 22.5˚C	D.B. 46˚C
	Lower limit	D.B. 19˚C, W.B. 15˚C	D.B. -5˚C ※
Heating	Upper limit	D.B. 28˚C	D.B. 21˚C, W.B. 15˚C
	Lower limit	D.B. 17˚C	D.B. -11˚C, W.B. -12˚C

3. Guaranteed voltage
   198~264V, 50Hz
4. Above data based on indicated voltage
   Indoor unit Single phase 230V 50Hz
   Outdoor unit Single phase 230V 50Hz

※ If optional Air protect guide installed. D.B.-15℃

Model name	Indoor unit		PLA-RP60AA	PLA-RP71AA
	Outdoor unit		PUHZ-RP60VHA2	PUHZ-RP71VHA2
Cooling	Capacity	Btu/h	20,500	24,200
		kW	6.0(2.7-6.7)	7.1(3.3-8.1)
	Total input	kW	1.65	1.97
	EER		3.64	3.60
	Energy label class		A	A
	SHF		0.78	0.74
Heating	Capacity	Btu/h	23,900	27,300
		kW	7.0(2.8-8.2)	8.0(3.5-10.2)
	Total input	kW	1.85	2.34
	COP		3.78	3.42
	Energy label class		A	B
	Booster heater	kW	-	-
Power supply	Phase	ϕ	1	
	Cycle	Hz	50	
	Voltage	V	230	
	Breaker size	A	25	
Indoor unit	Air flow	CMM	14-15-16-18	15-16-18-20
	(Low-Medium2-Medium1-High)	CFM	495-530-565-635	530-565-635-705
	External pressure	Pa	0	0
	Sound level (Low-Medium2-Medium1-High)	dB(A)	28-29-31-33	28-30-32-34
	External finish (Panel)		White Munsell 0.70Y 8.59/0.97	
	Dimension Unit (Panel)	W : mm	840 (950)	
		D : mm	840 (950)	
		H : mm	258 (30)	
		W : inch	33-1/16 (37-3/8)	
		D : inch	33-1/16 (37-3/8)	
		H : inch	10-3/16 (1-3/16)	
	Weight Unit (Panel)	kg	24 (5)	
		lbs	53 (11)	
	Unit drain pipe I.D.	mm	32	
		inch	1-1/4	
Outdoor unit	Air flow	CMM	55	
		CFM	1,940	
	Sound level at cooling	dB(A)	47	
	Sound level at heating	dB(A)	48	
	External finish		Ivory Munsell 3Y 7.8/1.1	
	Dimension	W : mm	950	
		D : mm	330+30	
		H : mm	943	
		W : inch	37-3/8	
		D : inch	13 + 1-3/16	
		H : inch	37-1/8	
	Weight	kg	75	
		lbs	165	
Refrigerant pipe size	Gas side O.D.	mm	15.88	
		inch	5/8	
	Liquid side O.D.	mm	9.52	
		inch	3/8	
Refrigerant pipe length	Height difference	m	Max. 30	
	Length	m	Max. 50	

NOTE:

1. Rating conditions (ISO T1)
   Cooling Indoor : D.B. 27℃ (80˚F) W.B. 19℃ (66˚F) Outdoor : D.B. 35℃ (95˚F) W.B. 24℃ (75˚F)
   Heating Indoor : D.B. 20℃ (68˚F) Outdoor : D.B. 7℃ (45˚F) W.B. 6℃ (43˚F)
   Refrigerant piping length (one way) : 5m (16ft.)
2. Guaranteed operating range

		Indoor	Outdoor
Cooling	Upper limit	D.B. 35˚C, W.B. 22.5˚C	D.B. 46˚C
	Lower limit	D.B. 19˚C, W.B. 15˚C	D.B. -5˚C ※
Heating	Upper limit	D.B. 28˚C	D.B. 21˚C, W.B. 15˚C
	Lower limit	D.B. 17˚C	D.B. -11˚C, W.B. -12˚C

3. Guaranteed voltage
   198~264V, 50Hz
4. Above data based on indicated voltage
   Indoor unit Single phase 230V 50Hz
   Outdoor unit Single phase 230V 50Hz

※ If optional Air protect guide installed. D.B.-15℃

Model name	Indoor unit		PLA-RP100AA2	PLA-RP125AA2	PLA-RP140AA2
	Outdoor unit		PUHZ-RP100VHA2	PUHZ-RP125VHA2	PUHZ-RP140VHA2
Cooling	Capacity	Btu/h	34,100	42,700	47,800
		kW	10.0(4.9-11.4)	12.5(5.5-14.0)	14.0(5.5-15.3)
	Total input	kW	3.02	3.87	4.65
	EER		3.31	3.23	3.01
	Energy label class		A	A	B
	SHF		0.78	0.74	0.71
Heating	Capacity	Btu/h	38,200	47,800	54,600
		kW	11.2(4.5-14.0)	14.0(5.0-16.0)	16.0(5.0-18.0)
	Total input	kW	3.02	3.88	4.69
	COP		3.61	3.61	3.41
	Energy label class		A	A	B
	Booster heater	kW	-	-	-
Power supply	Phase	ϕ	1		
	Cycle	Hz	50		
	Voltage	V	230		
	Breaker size	A	32		40
Indoor unit	Air flow	CMM	19-21-23-27	24-25-27-30	
	(Low-Medium2-Medium1-High)	CFM	670-740-810-950	850-880-950-1060	
	External pressure	Pa	0	0	
	Sound level (Low-Medium2-Medium1-High)	dB(A)	33-36-39-41	37-40-43-45	
	External finish (Panel)		White Munsell 0.70Y 8.59/0.97		
	Dimension Unit (Panel)	W : mm	840 (950)		
		D : mm	840 (950)		
		H : mm	298 (30)		
		W : inch	33-1/16 (37-3/8)		
		D : inch	33-1/16 (37-3/8)		
		H : inch	11-3/4 (1-3/16)		
	Weight Unit (Panel)	kg	32 (5)		
		lbs	71 (11)		
	Unit drain pipe I.D.	mm	32		
		inch	1-1/4		
Outdoor unit	Air flow	CMM	100		
		CFM	3,530		
	Sound level at cooling	dB(A)	49	50	
	Sound level at heating	dB(A)	51	52	
	External finish		Ivory Munsell 3Y 7.8/1.1		
	Dimension	W : mm	950		
		D : mm	330+30		
		H : mm	1350		
		W : inch	37-3/8		
		D : inch	13 + 1-3/16		
		H : inch	53-1/8		
	Weight	kg	121	116	
		lbs	267	256	
Refrigerant pipe size	Gas side O.D.	mm	15.88		
		inch	5/8		
	Liquid side O.D.	mm	9.52		
		inch	3/8		
Refrigerant pipe length	Height difference	m	Max. 30		
	Length	m	Max. 75		

NOTE:

1. Rating conditions (ISO T1)
   Cooling Indoor : D.B. 27℃ (80˚F) W.B. 19℃ (66˚F) Outdoor : D.B. 35℃ (95˚F) W.B. 24℃ (75˚F)
   Heating Indoor : D.B. 20℃ (68˚F) Outdoor : D.B. 7℃ (45˚F) W.B. 6℃ (43˚F)
   Refrigerant piping length (one way) : 5m (16ft.)
2. Guaranteed operating range

		Indoor	Outdoor
Cooling	Upper limit	D.B. 35˚C, W.B. 22.5˚C	D.B. 46℃
	Lower limit	D.B. 19˚C, W.B. 15˚C	D.B. -5℃ ※
Heating	Upper limit	D.B. 28˚C	D.B. 21℃, W.B. 15℃
	Lower limit	D.B. 17˚C	D.B. -20℃, W.B. -20℃

3. Guaranteed voltage
   198~264V, 50Hz
4. Above data based on indicated voltage
   Indoor unit Single phase 230V 50Hz
   Outdoor unit Single phase 230V 50Hz

※ If optional Air protect guide installed. D.B.-15℃

Model name	Indoor unit		PLA-RP100AA2	PLA-RP125AA2	PLA-RP140AA2
	Outdoor unit		PUHZ-RP100YHA2	PUHZ-RP125YHA2	PUHZ-RP140YHA2
Cooling	Capacity	Btu/h	34,100	42,700	47,800
		kW	10.0(4.9-11.4)	12.5(5.5-14.0)	14.0(5.5-15.3)
	Total input	kW	3.02	3.87	4.65
	EER		3.31	3.23	3.01
	Energy label class		A	A	B
	SHF		0.78	0.74	0.71
Heating	Capacity	Btu/h	38,200	47,800	54,600
		kW	11.2(4.5-14.0)	14.0(5.0-16.0)	16.0(5.0-18.0)
	Total input	kW	3.02	3.88	4.69
	COP		3.61	3.61	3.41
	Energy label class		A	A	B
	Booster heater	kW	-	-	-
Power supply	Phase	ϕ	3		
	Cycle	Hz	50		
	Voltage	V	400		
	Breaker size	A	16		
Indoor unit	Air flow	CMM	19-21-23-27	24-25-27-30	
	(Low-Medium2-Medium1-High)	CFM	670-740-810-950	850-880-950-1060	
	External pressure	Pa	0	0	
	Sound level (Low-Medium2-Medium1-High)	dB(A)	33-36-39-41	37-40-43-45	
	External finish (Panel)		White Munsell 0.70Y 8.59/0.97		
	Dimension Unit (Panel)	W : mm	840 (950)		
		D : mm	840 (950)		
		H : mm	298 (30)		
		W : inch	33-1/16 (37-3/8)		
		D : inch	33-1/16 (37-3/8)		
		H : inch	11-3/4 (1-3/16)		
	Weight Unit (Panel)	kg	32 (5)		
		lbs	71 (11)		
	Unit drain pipe I.D.	mm	32		
		inch	1-1/4		
Outdoor unit	Air flow	CMM	100		
		CFM	3,530		
	Sound level at cooling	dB(A)	49	50	
	Sound level at heating	dB(A)	51	52	
	External finish		Ivory Munsell 3Y 7.8/1.1		
	Dimension	W : mm	950		
		D : mm	330+30		
		H : mm	1350		
		W : inch	37-3/8		
		D : inch	13 + 1-3/16		
		H : inch	53-1/8		
	Weight	kg	135	130	
		lbs	298	287	
Refrigerant pipe size	Gas side O.D.	mm	15.88		
		inch	5/8		
	Liquid side O.D.	mm	9.52		
		inch	3/8		
Refrigerant pipe length	Height difference	m	Max. 30		
	Length	m	Max. 75		

NOTE:

1. Rating conditions (ISO T1)
   Cooling Indoor : D.B. 27℃ (80˚F) W.B. 19℃ (66˚F) Outdoor : D.B. 35℃ (95˚F) W.B. 24℃ (75˚F)
   Heating Indoor : D.B. 20℃ (68˚F) Outdoor : D.B. 7℃ (45˚F) W.B. 6℃ (43˚F)
   Refrigerant piping length (one way) : 5m (16ft.)
2. Guaranteed operating range

		Indoor	Outdoor
Cooling	Upper limit	D.B. 35˚C, W.B. 22.5˚C	D.B. 46˚C
	Lower limit	D.B. 19˚C, W.B. 15˚C	D.B. -5˚C ※
Heating	Upper limit	D.B. 28˚C	D.B. 21˚C, W.B. 15˚C
	Lower limit	D.B. 17˚C	D.B. -20˚C, W.B. -20˚C

3. Guaranteed voltage
   Indoor unit 198~264V, 50Hz
   Outdoor unit 342~457V, 50Hz
4. Above data based on indicated voltage
   Indoor unit Single phase 230V 50Hz
   Outdoor unit 3 phase 400V 50Hz

※ If optional Air protect guide installed. D.B.-15℃

2-2. CEILING-CONCEALED TYPE

Model name	Indoor unit		PEAD-RP35EA2	PEAD-RP50EA
	Outdoor unit		PUHZ-RP35VHA2	PUHZ-RP50VHA2
Cooling	Capacity	Btu/h	12,300	16,700
		kW	3.6(1.6-4.5)	4.9(2.3-5.6)
	Total input	kW	1.12	1.52
	EER		3.21	3.22
	Energy label class		A	A
	SHF		0.89	0.82
Heating	Capacity	Btu/h	14,000	20,500
		kW	4.1(1.6-5.2)	6.0(2.5-7.3)
	Total input	kW	1.20	1.65
	COP		3.41	3.64
	Energy label class		B	A
	Booster heater	kW	-	-
Power supply	Phase	ϕ	1	
	Cycle	Hz	50	
	Voltage	V	230	
	Breaker size	A	16	
Indoor unit	Air flow	CMM	13.5-17	
	(Low-High)	CFM	476-600	
	External pressure	Pa	30(70)	
	Sound level (Low-High)	dB(A)	36-40 (70Pa : 38-44)	
	External finish		Galvanized sheets	
	Dimension	W : mm	935	
		D : mm	700	
		H : mm	295	
		W : inch	36-13/16	
		D : inch	27-5/8	
		H : inch	11-5/8	
	Weight	kg	33	35
		lbs	73	77
	Unit drain pipe		R1(External thread)	
Outdoor unit	Air flow	CMM	35	
		CFM	1,240	
	Sound level at cooling	dB(A)	44	
	Sound level at heating	dB(A)	46	
	External finish		Ivory Munsell 3Y 7.8/1.1	
	Dimension	W : mm	800	
		D : mm	300+23	
		H : mm	600	
		W : inch	31-1/2	
		D : inch	11-13/16 + 7/8	
		H : inch	23-5/8	
	Weight	kg	45	
		lbs	99	
Refrigerant pipe size	Gas side O.D.	mm	12.7	
		inch	1/2	
	Liquid side O.D.	mm	6.35	
		inch	1/4	
Refrigerant pipe length	Height difference	m	Max. 30	
	Length	m	Max. 50	

NOTE:

1. Rating conditions (ISO T1)
   Cooling Indoor : D.B. 27℃ (80˚F) W.B. 19℃ (66˚F) Outdoor : D.B. 35℃ (95˚F) W.B. 24℃ (75˚F)
   Heating Indoor : D.B. 20℃ (68˚F) Outdoor : D.B. 7℃ (45˚F) W.B. 6℃ (43˚F)
   Refrigerant piping length (one way) : 5m (16ft.)
2. Guaranteed operating range

		Indoor	Outdoor
Cooling	Upper limit	D.B. 35˚C, W.B. 22.5˚C	D.B. 46˚C
	Lower limit	D.B. 19˚C, W.B. 15˚C	D.B. -5˚C ※
Heating	Upper limit	D.B. 28˚C	D.B. 21˚C, W.B. 15˚C
	Lower limit	D.B. 17˚C	D.B. -11˚C, W.B. -12˚C

3. Guaranteed voltage
   198~264V, 50Hz
4. Above data based on indicated voltage
   Indoor unit Single phase 230V 50Hz
   Outdoor unit Single phase 230V 50Hz

※ If optional Air protect guide installed. D.B.-15℃

Model name	Indoor unit		PEAD-RP60EA	PEAD-RP71EA
	Outdoor unit		PUHZ-RP60VHA2	PUHZ-RP71VHA2
Cooling	Capacity	Btu/h	20,500	24,200
		kW	6.0(2.7-6.7)	7.1(3.3-8.1)
	Total input	kW	1.86	2.15
	EER		3.23	3.30
	Energy label class		A	A
	SHF		0.79	0.83
Heating	Capacity	Btu/h	23,900	27,300
		kW	7.0(2.8-8.2)	8.0(3.5-10.2)
	Total input	kW	1.90	2.34
	COP		3.68	3.42
	Energy label class		A	B
	Booster heater	kW	-	-
Power supply	Phase	ϕ	1	
	Cycle	Hz	50	
	Voltage	V	230	
	Breaker size	A	25	
Indoor unit	Air flow	CMM	17-21	20-25
	(Low-High)	CFM	600-741	706-883
	External pressure	Pa	30(70)	70(130)
	Sound level (Low-High)	dB(A)	37-41 (70Pa : 39-46)	37-41 (130Pa : 40-45)
	External finish		Galvanized sheets	
	Dimension	W : mm	1175	
		D : mm	700	740
		H : mm	295	325
		W : inch	46-1/8	
		D : inch	27-5/8	
		H : inch	11-5/8	12-13/16
	Weight	kg	42	44
		lbs	92	97
	Unit drain pipe		R1(External thread)	
Outdoor unit	Air flow	CMM	55	55
		CFM	1,940	1,940
	Sound level at cooling	dB(A)	47	47
	Sound level at heating	dB(A)	48	48
	External finish		Ivory Munsell 3Y 7.8/1.1	
	Dimension	W : mm	950	950
		D : mm	330+30	330+30
		H : mm	943	943
		W : inch	37-3/8	37-3/8
		D : inch	13 + 1-3/16	13 + 1-3/16
		H : inch	37-1/8	37-1/8
	Weight	kg	75	75
		lbs	165	165
Refrigerant pipe size	Gas side O.D.	mm	15.88	15.88
		inch	5/8	5/8
	Liquid side O.D.	mm	9.52	9.52
		inch	3/8	3/8
Refrigerant pipe length	Height difference	m	Max. 30	Max. 30
	Length	m	Max. 50	Max. 50

NOTE:

1. Rating conditions (ISO T1)
   Cooling Indoor : D.B. 27℃ (80˚F) W.B. 19℃ (66˚F) Outdoor : D.B. 35℃ (95˚F) W.B. 24℃ (75˚F)
   Heating Indoor : D.B. 20℃ (68˚F) Outdoor : D.B. 7℃ (45˚F) W.B. 6℃ (43˚F)
   Refrigerant piping length (one way) : 5m (16ft.)
2. Guaranteed operating range

		Indoor	Outdoor
Cooling	Upper limit	D.B. 35˚C, W.B. 22.5˚C	D.B. 46˚C
	Lower limit	D.B. 19˚C, W.B. 15˚C	D.B. -5˚C ※
Heating	Upper limit	D.B. 28˚C	D.B. 21˚C, W.B. 15˚C
	Lower limit	D.B. 17˚C	D.B. -11˚C, W.B. -12˚C

3. Guaranteed voltage
   198~264V, 50Hz
4. Above data based on indicated voltage
   Indoor unit Single phase 230V 50Hz
   Outdoor unit Single phase 230V 50Hz

※ If optional Air protect guide installed. D.B.-15℃

Model name	Indoor unit		PEAD-RP100EA2	PEAD-RP125EA	PEAD-RP140EA
	Outdoor unit		PUHZ-RP100VHA2	PUHZ-RP125VHA2	PUHZ-RP140VHA2
Cooling	Capacity	Btu/h	34,100	42,700	47,800
		kW	10.0(4.9-11.4)	12.5(5.5-14.0)	14.0(5.5-15.3)
	Total input	kW	3.06	3.89	4.65
	EER		3.27	3.21	3.01
	Energy label class		A	A	B
	SHF		0.86	0.82	0.83
Heating	Capacity	Btu/h	38,200	47,800	54,600
		kW	11.2(4.5-14.0)	14.0(5.0-16.0)	16.0(5.0-18.0)
	Total input	kW	3.19	3.88	4.69
	COP		3.51	3.61	3.41
	Energy label class		B	A	B
	Booster heater	kW	-	-	-
Power supply	Phase	ϕ	1		
	Cycle	Hz	50		
	Voltage	V	230		
	Breaker size	A	32		40
Indoor unit	Air flow	CMM	33.5-42		36.5-46
	(Low-High)	CFM	1183-1483		1288-1624
	External pressure	Pa	70(130)		
	Sound level (Low-High)	dB(A)	44-50 (130Pa : 46-52)		46-51 (130Pa : 47-53)
	External finish		Galvanized sheets		
	Dimension	W : mm	1415		1715
		D : mm	740		
		H : mm	325		
		W : inch	55-11/16		67-1/2
		D : inch	29-1/8		
		H : inch	12-13/16		
	Weight	kg	65		70
		lbs	143		154
	Unit drain pipe		R1(External thread)		
Outdoor unit	Air flow	CMM	100		
		CFM	3,530		
	Sound level at cooling	dB(A)	49	50	
	Sound level at heating	dB(A)	51	52	
	External finish		Ivory Munsell 3Y 7.8/1.1		
	Dimension	W : mm	950		
		D : mm	330+30		
		H : mm	1350		
		W : inch	37-3/8		
		D : inch	13 + 1-3/16		
		H : inch	53-1/8		
	Weight	kg	121	116	
		lbs	267	256	
Refrigerant pipe size	Gas side O.D.	mm	15.88		
		inch	5/8		
	Liquid side O.D.	mm	9.52		
		inch	3/8		
Refrigerant pipe length	Height difference	m	Max. 30		
	Length	m	Max. 75		

NOTE:

1. Rating conditions (ISO T1)
   Cooling Indoor : D.B. 27℃ (80˚F) W.B. 19℃ (66˚F) Outdoor : D.B. 35℃ (95˚F) W.B. 24℃ (75˚F)
   Heating Indoor : D.B. 20℃ (68˚F) Outdoor : D.B. 7℃ (45˚F) W.B. 6℃ (43˚F)
   Refrigerant piping length (one way) : 5m (16ft.)
2. Guaranteed operating range

		Indoor	Outdoor
Cooling	Upper limit	D.B. 35˚C, W.B. 22.5˚C	D.B. 46℃
	Lower limit	D.B. 19˚C, W.B. 15˚C	D.B. -5℃ ※
Heating	Upper limit	D.B. 28˚C	D.B. 21℃, W.B. 15℃
	Lower limit	D.B. 17˚C	D.B. -20℃, W.B. -20℃

3. Guaranteed voltage
   198~264V, 50Hz
4. Above data based on indicated voltage
   Indoor unit Single phase 230V 50Hz
   Outdoor unit Single phase 230V 50Hz

※ If optional Air protect guide installed. D.B.-15℃

Model name	Indoor unit		PEAD-RP100EA2	PEAD-RP125EA	PEAD-RP140EA
	Outdoor unit		PUHZ-RP100YHA2	PUHZ-RP125YHA2	PUHZ-RP140YHA2
Cooling	Capacity	Btu/h	34,100	42,700	47,800
		kW	10.0(4.9-11.4)	12.5(5.5-14.0)	14.0(5.5-15.3)
	Total input	kW	3.06	3.89	4.65
	EER		3.27	3.21	3.01
	Energy label class		A	A	B
	SHF		0.86	0.82	0.83
Heating	Capacity	Btu/h	38,200	47,800	54,600
		kW	11.2(4.5-14.0)	14.0(5.0-16.0)	16.0(5.0-18.0)
	Total input	kW	3.19	3.88	4.69
	COP		3.51	3.61	3.41
	Energy label class		B	A	B
	Booster heater	kW	-	-	-
Power supply	Phase	ϕ	3		
	Cycle	Hz	50		
	Voltage	V	400		
	Breaker size	A	16		
Indoor unit	Air flow	CMM	33.5-42		36.5-46
	(Low-High)	CFM	1183-1483		1288-1624
	External pressure	Pa	70(130)		
	Sound level (Low-High)	dB(A)	44-50 (130Pa : 46-52)		46-51 (130Pa : 47-53)
	External finish		Galvanized sheets		
	Dimension	W : mm	1415		1715
		D : mm	740		
		H : mm	325		
		W : inch	55-11/16		67-1/2
		D : inch	29-1/8		
		H : inch	12-13/16		
	Weight	kg	65		70
		lbs	143		154
	Unit drain pipe		R1(External thread)		
Outdoor unit	Air flow	CMM	100		
		CFM	3,530		
	Sound level at cooling	dB(A)	49	50	
	Sound level at heating	dB(A)	51	52	
	External finish		Ivory Munsell 3Y 7.8/1.1		
	Dimension	W : mm	950		
		D : mm	330+30		
		H : mm	1350		
		W : inch	37-3/8		
		D : inch	13 + 1-3/16		
		H : inch	53-1/8		
	Weight	kg	135	130	
		lbs	298	287	
Refrigerant pipe size	Gas side O.D.	mm	15.88		
		inch	5/8		
	Liquid side O.D.	mm	9.52		
		inch	3/8		
Refrigerant pipe length	Height difference	m	Max. 30		
	Length	m	Max. 75		

NOTE:

1. Rating conditions (ISO T1)
   Cooling Indoor : D.B. 27℃ (80˚F) W.B. 19℃ (66˚F) Outdoor : D.B. 35℃ (95˚F) W.B. 24℃ (75˚F)
   Heating Indoor : D.B. 20℃ (68˚F) Outdoor : D.B. 7℃ (45˚F) W.B. 6℃ (43˚F)
   Refrigerant piping length (one way) : 5m (16ft.)
2. Guaranteed operating range

		Indoor	Outdoor
Cooling	Upper limit	D.B. 35˚C, W.B. 22.5˚C	D.B. 46˚C
	Lower limit	D.B. 19˚C, W.B. 15˚C	D.B. -5˚C ※
Heating	Upper limit	D.B. 28˚C	D.B. 21˚C, W.B. 15˚C
	Lower limit	D.B. 17˚C	D.B. -20˚C, W.B. -20˚C

3. Guaranteed voltage
   Indoor unit 198~264V, 50Hz
   Outdoor unit 342~457V, 50Hz
4. Above data based on indicated voltage
   Indoor unit Single phase 230V 50Hz
   Outdoor unit 3 phase 400V 50Hz

※ If optional Air protect guide installed. D.B.-15℃

Model name	Indoor unit		PEAD-RP60GA	PEAD-RP71GA	PEAD-RP100GA
	Outdoor unit		PUHZ-RP60VHA2	PUHZ-RP71VHA2	PUHZ-RP100VHA2
Cooling	Capacity	Btu/h	20,500	24,200	34,100
		kW	6.0(2.7-6.7)	7.1(3.3-8.1)	10.0(4.9-11.4)
	Total input	kW	1.68	2.15	3.08
	EER		3.57	3.30	3.25
	Energy label class		A	A	A
	SHF		0.88	0.83	0.86
Heating	Capacity	Btu/h	23,900	27,300	38,200
		kW	7.0(2.8-8.2)	8.0(3.5-10.2)	11.0(4.5-14.0)
	Total input	kW	1.77	2.34	3.23
	COP		3.95	3.42	3.41
	Energy label class		A	B	B
	Booster heater	kW	-	-	-
Power supply	Phase	ϕ	1		
	Cycle	Hz	50		
	Voltage	V	230		
	Breaker size	A	25		32
Indoor unit	Air flow	CMM	16.5-21	20-25	26.5-33
	(Low-High)	CFM	582-741	706-883	935-1165
	External pressure	Pa	10/50/70		10/50/70
	Sound level (Low-High)	dB(A)	33-37/35-40/36-42 (10/50/70Pa)	35-38/37-41/37-43 (10/50/70Pa)	40-43/42-45/42-46 (10/50/70Pa)
	External finish		Galvanized sheets		
	Dimension	W : mm	1171		1411
		D : mm	740		
		H : mm	275		
		W : inch	46-1/8		55-9/16
		D : inch	29-1/8		
		H : inch	10-13/16		
	Weight	kg	42		50
		lbs	93		111
	Unit drain pipe O.D.	mm	32		
		inch	1-1/4		
Outdoor unit	Air flow	CMM	55		100
		CFM	1,940		3,530
	Sound level at cooling	dB(A)	47		49
	Sound level at heating	dB(A)	48		51
	External finish		Ivory Munsell 3Y 7.8/1.1		
	Dimension	W : mm	950		
		D : mm	330+30		
		H : mm	943		1350
		W : inch	37-3/8		
		D : inch	13 + 1-3/16		
		H : inch	37-1/8		53-1/8
	Weight	kg	75		121
		lbs	165		267
Refrigerant pipe size	Gas side O.D.	mm	15.88		
		inch	5/8		
	Liquid side O.D.	mm	9.52		
		inch	3/8		
Refrigerant pipe length	Height difference	m	Max. 30		Max. 30
	Length	m	Max. 50		Max. 75

NOTE:

1. Rating conditions (ISO T1)
   Cooling Indoor : D.B. 27℃ (80˚F) W.B. 19℃ (66˚F) Outdoor : D.B. 35℃ (95˚F) W.B. 24℃ (75˚F)
   Heating Indoor : D.B. 20℃ (68˚F) Outdoor : D.B. 7℃ (45˚F) W.B. 6℃ (43˚F)
   Refrigerant piping length (one way) : 5m (16ft.)
2. Guaranteed operating range

		Indoor	Outdoor
Cooling	Upper limit	D.B. 35˚C, W.B. 22.5˚C	D.B. 46˚C
	Lower limit	D.B. 19˚C, W.B. 15˚C	D.B. -5˚C ※1
Heating	Upper limit	D.B. 28˚C	D.B. 21˚C, W.B. 15˚C
	Lower limit	D.B. 17˚C	D.B. -11˚C, W.B. -12˚C ※2

3. Guaranteed voltage
   198~264V, 50Hz
4. Above data based on indicated voltage
   Indoor unit Single phase 230V 50Hz
   Outdoor unit Single phase 230V 50Hz

※1. If optional Air protect guide installed. D.B.-15℃
※2. For RP100 D.B. -20℃, W.B. -20℃

Model name	Indoor unit		PEAD-RP100GA
	Outdoor unit		PUHZ-RP100YHA2
Cooling	Capacity	Btu/h	34,100
		kW	10.0(4.9-11.4)
	Total input	kW	3.08
	EER		3.25
	Energy label class		A
	SHF		0.86
Heating	Capacity	Btu/h	38,200
		kW	11.0(4.5-14.0)
	Total input	kW	3.23
	COP		3.41
	Energy label class		B
	Booster heater	kW	-
Power supply	Phase	ϕ	3
	Cycle	Hz	50
	Voltage	V	400
	Breaker size	A	16
Indoor unit	Air flow	CMM	26.5-33
	(Low-High)	CFM	935-1165
	External pressure	Pa	10/50/70
	Sound level (Low-High)	dB(A)	40-43/42-45/42-46 (10/50/70Pa)
	External finish		Galvanized sheets
	Dimension	W : mm	1411
		D : mm	740
		H : mm	275
		W : inch	55-9/16
		D : inch	29-1/8
		H : inch	10-13/16
	Weight	kg	50
		lbs	111
	Unit drain pipe O.D.	mm	32
		inch	1-1/4
Outdoor unit	Air flow	CMM	100
		CFM	3,530
	Sound level at cooling	dB(A)	49
	Sound level at heating	dB(A)	51
	External finish		Ivory Munsell 3Y 7.8/1.1
	Dimension	W : mm	943
		D : mm	330+30
		H : mm	1350
		W : inch	37-3/8
		D : inch	13 + 1-3/16
		H : inch	53-1/8
	Weight	kg	135
		lbs	298
Refrigerant pipe size	Gas side O.D.	mm	15.88
		inch	5/8
	Liquid side O.D.	mm	9.52
		inch	3/8
Refrigerant pipe length	Height difference	m	Max. 30
	Length	m	Max. 75

NOTE:

1. Rating conditions (ISO T1)
   Cooling Indoor : D.B. 27℃ (80˚F) W.B. 19℃ (66˚F) Outdoor : D.B. 35℃ (95˚F) W.B. 24℃ (75˚F)
   Heating Indoor : D.B. 20℃ (68˚F) Outdoor : D.B. 7℃ (45˚F) W.B. 6℃ (43˚F)
   Refrigerant piping length (one way) : 5m (16ft.)
2. Guaranteed operating range

		Indoor	Outdoor
Cooling	Upper limit	D.B. 35˚C, W.B. 22.5˚C	D.B. 46˚C
	Lower limit	D.B. 19˚C, W.B. 15˚C	D.B. -5˚C ※
Heating	Upper limit	D.B. 28˚C	D.B. 21˚C, W.B. 15˚C
	Lower limit	D.B. 17˚C	D.B. -20˚C, W.B. -20˚C

3. Guaranteed voltage
   Indoor unit 198~264V, 50Hz
   Outdoor unit 342~457V, 50Hz
4. Above data based on indicated voltage
   Indoor unit Single phase 230V 50Hz
   Outdoor unit 3 phase 400V 50Hz

※ If optional Air protect guide installed. D.B.-15℃

2-3. WALL MOUNTED TYPE

Model name	Indoor unit		PKA-RP35GAL	PKA-RP50GAL
	Outdoor unit		PUHZ-RP35VHA2	PUHZ-RP50VHA2
Cooling	Capacity	Btu/h	12,300	15,700
		kW	3.6(1.6-4.5)	4.6(2.3-5.4)
	Total input	kW	1.03	1.63
	EER		3.50	2.82
	Energy label class		A	C
	SHF		0.84	0.74
Heating	Capacity	Btu/h	14,000	15,400
		kW	4.1(1.6-5.2)	4.5(2.5-6.2)
	Total input	kW	1.27	1.40
	COP		3.23	3.21
	Energy label class		C	C
	Booster heater	kW	-	-
Power supply	Phase	ϕ	1	
	Cycle	Hz	50	
	Voltage	V	230	
	Breaker size	A	16	
Indoor unit	Air flow	CMM	9-10-11-12	
	(Low-Medium2-Medium1-High)	CFM	320-355-390-425	
	External pressure	Pa	0	
	Sound level (Low-Medium2-Medium1-High)	dB(A)	36-38-41-43	
	External finish		White Munsell 0.70Y 8.59/0.97	
	Dimension	W : mm	990	
		D : mm	235	
		H : mm	340	
		W : inch	39	
		D : inch	9-1/4	
		H : inch	13-3/8	
	Weight	kg	16	
		lbs	35	
	Unit drain pipe O.D.	mm	20	
		inch	13/16	
Outdoor unit	Air flow	CMM	35	
		CFM	1,240	
	Sound level at cooling	dB(A)	44	
	Sound level at heating	dB(A)	46	
	External finish		Ivory Munsell 3Y 7.8/1.1	
	Dimension	W : mm	800	
		D : mm	300+23	
		H : mm	600	
		W : inch	31-1/2	
		D : inch	11-13/16 + 7/8	
		H : inch	23-5/8	
	Weight	kg	45	
		lbs	99	
Refrigerant pipe size	Gas side O.D.	mm	12.7	
		inch	1/2	
	Liquid side O.D.	mm	6.35	
		inch	1/4	
Refrigerant pipe length	Height difference	m	Max. 30	
	Length	m	Max. 50	

NOTE:

1. Rating conditions (ISO T1)
   Cooling Indoor : D.B. 27℃ (80˚F) W.B. 19℃ (66˚F) Outdoor : D.B. 35℃ (95˚F) W.B. 24℃ (75˚F)
   Heating Indoor : D.B. 20℃ (68˚F) Outdoor : D.B. 7℃ (45˚F) W.B. 6℃ (43˚F)
   Refrigerant piping length (one way) : 5m (16ft.)
2. Guaranteed operating range

		Indoor	Outdoor
Cooling	Upper limit	D.B. 35˚C, W.B. 22.5˚C	D.B. 46˚C
	Lower limit	D.B. 19˚C, W.B. 15˚C	D.B. -5˚C ※
Heating	Upper limit	D.B. 28˚C	D.B. 21˚C, W.B. 15˚C
	Lower limit	D.B. 17˚C	D.B. -11˚C, W.B. -12˚C

3. Guaranteed voltage
   198~264V, 50Hz
4. Above data based on indicated voltage
   Indoor unit Single phase 230V 50Hz
   Outdoor unit Single phase 230V 50Hz

※ If optional Air protect guide installed. D.B.-15℃

Model name	Indoor unit		PKA-RP50FAL2	PKA-RP60FAL	PKA-RP71FAL	PKA-RP100FAL
	Outdoor unit		PUHZ-RP50VHA2	PUHZ-RP60VHA2	PUHZ-RP71VHA2	PUHZ-RP100VHA2
Cooling	Capacity	Btu/h	17,000	20,500	24,200	34,100
		kW	5.0(2.3-5.6)	6.0(2.7-6.7)	7.1(3.3-8.1)	10.0(4.9-11.4)
	Total input	kW	1.66	1.55	1.98	2.93
	EER		3.01	3.87	3.59	3.41
	Energy label class		B	A	A	A
	SHF		0.86	0.83	0.77	0.77
Heating	Capacity	Btu/h	20,500	23,900	27,300	38,200
		kW	6.0(2.5-7.3)	7.0(2.8-8.2)	7.6(3.5-10.2)	11.2(4.5-14.0)
	Total input	kW	1.76	2.01	2.23	3.25
	COP		3.41	3.48	3.41	3.45
	Energy label class		B	B	B	B
	Booster heater	kW	-	-	-	-
Power supply	Phase	ϕ	1			
	Cycle	Hz	50			
	Voltage	V	230			
	Breaker size	A	16	25		32
Indoor unit	Air flow (Low-High)	CMM	15-20	15-20		22-28
		CFM	530-705	530-705		780-990
	External pressure	Pa	0			
	Sound level (Low-High)	dB(A)	39-45	39-45		41-46
	External finish		Munsell 3.4Y 7.7/0.8			
	Dimension	W : mm	1400	1400		1680
		D : mm	235			
		H : mm	340			
		W : inch	55-1/8	55-1/8		66-1/8
		D : inch	9-1/4			
		H : inch	13-3/8			
	Weight	kg	24	24		28
		lbs	53	53		62
	Unit drain pipe O.D.	mm	20			
		inch	13/16			
Outdoor unit	Air flow	CMM	35	55		100
		CFM	1,240	1,940		3,530
	Sound level at cooling	dB(A)	44	47		49
	Sound level at heating	dB(A)	46	48		51
	External finish		Ivory Munsell 3Y 7.8/1.1			
	Dimension	W : mm	800	950		950
		D : mm	300+23	330+30		330+30
		H : mm	600	943		1350
		W : inch	31-1/2	37-3/8		37-3/8
		D : inch	11 - 13/16	13 + 1-3/16		13 + 1-3/16
		H : inch	23-5/8	37-1/8		53-1/8
	Weight	kg	45	75		121
		lbs	99	165		267
Refrigerant pipe size	Gas side O.D.	mm	12.7	15.88		15.88
		inch	1/2	5/8		5/8
	Liquid side O.D.	mm	6.35	9.52		9.52
		inch	1/4	3/8		3/8
Refrigerant pipe length	Height difference	m	Max. 30	Max. 30		Max. 30
	Length	m	Max. 50	Max. 50		Max. 75

NOTE:

1. Rating conditions (ISO T1)
   Cooling Indoor : D.B. 27℃ (80˚F) W.B. 19℃ (66˚F) Outdoor : D.B. 35℃ (95˚F) W.B. 24℃ (75˚F)
   Heating Indoor : D.B. 20℃ (68˚F) Outdoor : D.B. 7℃ (45˚F) W.B. 6℃ (43˚F)
   Refrigerant piping length (one way) : 5m (16ft.)
2. Guaranteed operating range

		Indoor	Outdoor
Cooling	Upper limit	D.B. 35˚C, W.B. 22.5˚C	D.B. 46˚C
	Lower limit	D.B. 19˚C, W.B. 15˚C	D.B. -5˚C ※1
Heating	Upper limit	D.B. 28˚C	D.B. 21˚C, W.B. 15˚C
	Lower limit	D.B. 17˚C	D.B. -11˚C, W.B. -12˚C ※2

3. Guaranteed voltage
   198~264V, 50Hz
4. Above data based on indicated voltage
   Indoor unit Single phase 230V 50Hz
   Outdoor unit Single phase 230V 50Hz

※1. If optional Air protect guide installed. D.B.-15℃

※2. For RP100 D.B. -20℃, W.B. -20℃

Model name	Indoor unit		PKA-RP100FAL
	Outdoor unit		PUHZ-RP100YHA2
Cooling	Capacity	Btu/h	34,100
		kW	10.0(4.9-11.4)
	Total input	kW	2.93
	EER		3.41
	Energy label class		A
	SHF		0.77
Heating	Capacity	Btu/h	38,200
		kW	11.2(4.5-14.0)
	Total input	kW	3.25
	COP		3.45
	Energy label class		B
	Booster heater	kW	-
Power supply	Phase	ϕ	3
	Cycle	Hz	50
	Voltage	V	400
	Breaker size	A	16
Indoor unit	Air flow	CMM	22-28
	(Low-High)	CFM	780-990
	External pressure	Pa	0
	Sound level (Low-High)	dB(A)	41-46
	External finish		Munsell 3.4Y 7.7/0.8
	Dimension	W : mm	1680
		D : mm	235
		H : mm	340
		W : inch	66-1/8
		D : inch	9-1/4
		H : inch	13-3/8
	Weight	kg	28
		lbs	62
	Unit drain pipe O.D.	mm	20
		inch	13/16
Outdoor unit	Air flow	CMM	100
		CFM	3,530
	Sound level at cooling	dB(A)	49
	Sound level at heating	dB(A)	51
	External finish		Ivory Munsell 3Y 7.8/1.1
	Dimension	W : mm	950
		D : mm	330+30
		H : mm	1350
		W : inch	37-3/8
		D : inch	13 + 1-3/16
		H : inch	53-1/8
	Weight	kg	135
		lbs	298
Refrigerant pipe size	Gas side O.D.	mm	15.88
		inch	5/8
	Liquid side O.D.	mm	9.52
		inch	3/8
Refrigerant pipe length	Height difference	m	Max. 30
	Length	m	Max. 75

NOTE:

1. Rating conditions (ISO T1)
   Cooling Indoor : D.B. 27℃ (80˚F) W.B. 19℃ (66˚F) Outdoor : D.B. 35℃ (95˚F) W.B. 24℃ (75˚F)
   Heating Indoor : D.B. 20℃ (68˚F) Outdoor : D.B. 7℃ (45˚F) W.B. 6℃ (43˚F)
   Refrigerant piping length (one way) : 5m (16ft.)
2. Guaranteed operating range

		Indoor	Outdoor
Cooling	Upper limit	D.B. 35˚C, W.B. 22.5˚C	D.B. 46˚C
	Lower limit	D.B. 19˚C, W.B. 15˚C	D.B. -5˚C ※
Heating	Upper limit	D.B. 28˚C	D.B. 21˚C, W.B. 15˚C
	Lower limit	D.B. 17˚C	D.B. -20˚C, W.B. -20˚C

3. Guaranteed voltage
   Indoor unit 198~264V, 50Hz
   Outdoor unit 342~457V, 50Hz
4. Above data based on indicated voltage
   Indoor unit Single phase 230V 50Hz
   Outdoor unit 3 phase 400V 50Hz

※ If optional Air protect guide installed. D.B.-15℃

2-4. CEILING SUSPENDED TYPE

Model name	Indoor unit		PCA-RP50GA	PCA-RP50GA2	PCA-RP60GA	PCA-RP71GA
	Outdoor unit		PUHZ-RP50VHA2	PUHZ-RP50VHA2	PUHZ-RP60VHA2	PUHZ-RP71VHA2
Cooling	Capacity	Btu/h	16,000	17,000	20,500	24,200
		kW	4.7(2.3-5.4)	5.0(2.3-5.6)	6.0(2.7-6.7)	7.1(3.3-8.1)
	Total input	kW	1.67	1.66	1.63	2.14
	EER		2.81	3.01	3.68	3.32
	Energy label class		C	B	A	A
	SHF		0.76	0.88	0.86	0.74
Heating	Capacity	Btu/h	18,800	20,500	23,900	27,300
		kW	5.5(2.5-6.6)	6.0(2.5-7.3)	7.0(2.8-8.2)	7.6(3.5-10.2)
	Total input	kW	1.71	1.76	2.03	2.23
	COP		3.22	3.41	3.45	3.41
	Energy label class		C	B	B	B
	Booster heater	kW	-	-	-	-
Power supply	Phase	ϕ	1			
	Cycle	Hz	50			
	Voltage	V	230			
	Breaker size	A	16		25	
Indoor unit	Air flow (Low-Medium2-Medium1-High)	CMM	10-11-12-13	14-15-16-18	14-15-16-18	
		CFM	355-390-425-460	495-530-565-635	495-530-565-635	
	External pressure	Pa	0			
	Sound level (Low-Medium2-Medium1-High)	dB(A)	37-38-40-42	37-39-41-43	37-39-41-43	
	External finish		White Munsell 0.70Y 8.59/0.97			
	Dimension	W : mm	1000	1310	1310	
		D : mm	680			
		H : mm	210			
		W : inch	39-3/8	51-9/16	51-9/16	
		D : inch	26-3/4			
		H : inch	8-1/4			
	Weight	kg	27	34	34	
		lbs	60	75	75	
	Unit drain pipe I.D.	mm	26			
		inch	1			
Outdoor unit	Air flow	CMM	35		55	
		CFM	1,240		1,940	
	Sound level at cooling	dB(A)	44		47	
	Sound level at heating	dB(A)	46		48	
	External finish		Ivory Munsell 3Y 7.8/1.1			
	Dimension	W : mm	800		950	
		D : mm	330+23		330+30	
		H : mm	600		943	
		W : inch	31-1/2		37-3/8	
		D : inch	13 + 7/8		13 + 1-3/16	
		H : inch	23-5/8		37-1/8	
	Weight	kg	45		75	
		lbs	99		165	
Refrigerant pipe size	Gas side O.D.	mm	12.7		15.88	
		inch	1/2		5/8	
	Liquid side O.D.	mm	6.35		9.52	
		inch	1/4		3/8	
Refrigerant pipe length	Height difference	m	Max. 30		Max. 30	
	Length	m	Max. 50		Max. 50	

NOTE:

1. Rating conditions (ISO T1)
   Cooling Indoor : D.B. 27℃ (80˚F) W.B. 19℃ (66˚F) Outdoor : D.B. 35℃ (95˚F) W.B. 24℃ (75˚F)
   Heating Indoor : D.B. 20℃ (68˚F) Outdoor : D.B. 7℃ (45˚F) W.B. 6℃ (43˚F)
   Refrigerant piping length (one way) : 5m (16ft.)
2. Guaranteed operating range

		Indoor	Outdoor
Cooling	Upper limit	D.B. 35˚C, W.B. 22.5˚C	D.B. 46˚C
	Lower limit	D.B. 19˚C, W.B. 15˚C	D.B. -5˚C ※
Heating	Upper limit	D.B. 28˚C	D.B. 21˚C, W.B. 15˚C
	Lower limit	D.B. 17˚C	D.B. -11˚C, W.B. -12˚C

3. Guaranteed voltage
   198~264V, 50Hz
4. Above data based on indicated voltage
   Indoor unit Single phase 230V 50Hz
   Outdoor unit Single phase 230V 50Hz

※ If optional Air protect guide installed. D.B.-15℃

Model name	Indoor unit		PCA-RP100GA	PCA-RP125GA	PCA-RP140GA
	Outdoor unit		PUHZ-RP100VHA2	PUHZ-RP125VHA2	PUHZ-RP140VHA2
Cooling	Capacity	Btu/h	34,100	42,700	47,800
		kW	10.0(4.9-11.4)	12.5(5.5-14.0)	14.0(5.5-15.3)
	Total input	kW	2.92	3.88	4.65
	EER		3.42	3.22	3.01
	Energy label class		A	A	B
	SHF		0.75	0.77	0.75
Heating	Capacity	Btu/h	38,200	47,800	54,600
		kW	11.2(4.5-14.0)	14.0(5.0-16.0)	16.0(5.0-18.0)
	Total input	kW	3.26	4.11	4.60
	COP		3.44	3.41	3.48
	Energy label class		B	B	B
	Booster heater	kW	-	-	-
Power supply	Phase	ϕ	1		
	Cycle	Hz	50		
	Voltage	V	230		
	Breaker size	A	32		40
Indoor unit	Air flow	CMM	20-21-23-25	27-30-32-34	
	(Low-Medium2-Medium1-High)	CFM	705-840-810-885	955-1060-1130-1200	
	External pressure	Pa	0	0	
	Sound level (Low-Medium2-Medium1-High)	dB(A)	40-41-43-45	41-43-45-46	42-44-46-48
	External finish		White Munsell 0.70Y 8.59/0.97		
	Dimension	W : mm	1310	1620	
		D : mm	680		
		H : mm	270		
		W : inch	51-9/16	63-3/4	
		D : inch	26-3/4		
		H : inch	10-5/8		
	Weight	kg	37	43	45
		lbs	82	95	99
	Unit drain pipe I.D.	mm	26		
		inch	1		
Outdoor unit	Air flow	CMM	100		
		CFM	3,530		
	Sound level at cooling	dB(A)	49	50	
	Sound level at heating	dB(A)	51	52	
	External finish		Ivory Munsell 3Y 7.8/1.1		
	Dimension	W : mm	950		
		D : mm	330+30		
		H : mm	1350		
		W : inch	37-3/8		
		D : inch	13 + 1-3/16		
		H : inch	53-1/8		
	Weight	kg	121	116	
		lbs	267	256	
Refrigerant pipe size	Gas side O.D.	mm	15.88		
		inch	5/8		
	Liquid side O.D.	mm	9.52		
		inch	3/8		
Refrigerant pipe length	Height difference	m	Max. 30		
	Length	m	Max. 75		

NOTE:

1. Rating conditions (ISO T1)
   Cooling Indoor : D.B. 27℃ (80˚F) W.B. 19℃ (66˚F) Outdoor : D.B. 35℃ (95˚F) W.B. 24℃ (75˚F)
   Heating Indoor : D.B. 20℃ (68˚F) Outdoor : D.B. 7℃ (45˚F) W.B. 6℃ (43˚F)
   Refrigerant piping length (one way) : 5m (16ft.)
2. Guaranteed operating range

		Indoor	Outdoor
Cooling	Upper limit	D.B. 35˚C, W.B. 22.5˚C	D.B. 46℃
	Lower limit	D.B. 19˚C, W.B. 15˚C	D.B. -5℃ ※
Heating	Upper limit	D.B. 28˚C	D.B. 21℃, W.B. 15℃
	Lower limit	D.B. 17˚C	D.B. -20℃, W.B. -20℃

3. Guaranteed voltage
   198~264V, 50Hz
4. Above data based on indicated voltage
   Indoor unit Single phase 230V 50Hz
   Outdoor unit Single phase 230V 50Hz

※ If optional Air protect guide installed. D.B.-15℃

Model name	Indoor unit		PCA-RP100GA	PCA-RP125GA	PCA-RP140GA
	Outdoor unit		PUHZ-RP100YHA2	PUHZ-RP125YHA2	PUHZ-RP140YHA2
Cooling	Capacity	Btu/h	34,100	42,700	47,800
		kW	10.0(4.9-11.4)	12.5(5.5-14.0)	14.0(5.5-15.3)
	Total input	kW	2.92	3.88	4.65
	EER		3.42	3.22	3.01
	Energy label class		A	A	B
	SHF		0.75	0.77	0.75
Heating	Capacity	Btu/h	38,200	47,800	54,600
		kW	11.2(4.5-14.0)	14.0(5.0-16.0)	16.0(5.0-18.0)
	Total input	kW	3.26	4.11	4.60
	COP		3.44	3.41	3.48
	Energy label class		B	B	B
	Booster heater	kW	-	-	-
Power supply	Phase	ϕ	3		
	Cycle	Hz	50		
	Voltage	V	400		
	Breaker size	A	16		
Indoor unit	Air flow	CMM	20-21-23-25	27-30-32-34	
	(Low-Medium2-Medium1-High)	CFM	705-840-810-885	955-1060-1130-1200	
	External pressure	Pa	0	0	
	Sound level (Low-Medium2-Medium1-High)	dB(A)	40-41-43-45	41-43-45-46	42-44-46-48
	External finish		White Munsell 0.70Y 8.59/0.97		
	Dimension	W : mm	1310	1620	
		D : mm	680		
		H : mm	270		
		W : inch	51-9/16	63-3/4	
		D : inch	26-3/4		
		H : inch	10-5/8		
	Weight	kg	37	43	45
		lbs	82	95	99
	Unit drain pipe I.D.	mm	26		
		inch	1		
Outdoor unit	Air flow	CMM	100		
		CFM	3,530		
	Sound level at cooling	dB(A)	49	50	
	Sound level at heating	dB(A)	51	52	
	External finish		Ivory Munsell 3Y 7.8/1.1		
	Dimension	W : mm	950		
		D : mm	330+30		
		H : mm	1350		
		W : inch	37-3/8		
		D : inch	13 + 1-3/16		
		H : inch	53-1/8		
	Weight	kg	135	130	
		lbs	298	287	
Refrigerant pipe size	Gas side O.D.	mm	15.88		
		inch	5/8		
	Liquid side O.D.	mm	9.52		
		inch	3/8		
Refrigerant pipe length	Height difference	m	Max. 30		
	Length	m	Max. 75		

NOTE:

1. Rating conditions (ISO T1)
   Cooling Indoor : D.B. 27℃ (80˚F) W.B. 19℃ (66˚F) Outdoor : D.B. 35℃ (95˚F) W.B. 24℃ (75˚F)
   Heating Indoor : D.B. 20℃ (68˚F) Outdoor : D.B. 7℃ (45˚F) W.B. 6℃ (43˚F)
   Refrigerant piping length (one way) : 5m (16ft.)
2. Guaranteed operating range

		Indoor	Outdoor
Cooling	Upper limit	D.B. 35˚C, W.B. 22.5˚C	D.B. 46˚C
	Lower limit	D.B. 19˚C, W.B. 15˚C	D.B. -5˚C ※
Heating	Upper limit	D.B. 28˚C	D.B. 21˚C, W.B. 15˚C
	Lower limit	D.B. 17˚C	D.B. -20˚C, W.B. -20˚C

3. Guaranteed voltage
   Indoor unit 198~264V, 50Hz
   Outdoor unit 342~457V, 50Hz
4. Above data based on indicated voltage
   Indoor unit Single phase 230V 50Hz
   Outdoor unit 3 phase 400V 50Hz

※ If optional Air protect guide installed. D.B.-15℃

Model name	Indoor unit		PCA-RP71HA	PCA-RP125HA	PCA-RP125HA
	Outdoor unit		PUHZ-RP71VHA2	PUHZ-RP125VHA2	PUHZ-RP125YHA2
Cooling	Capacity	Btu/h	24,200	42,700	42,700
		kW	7.1(3.3-8.1)	12.5(5.5-14.0)	12.5(5.5-14.0)
	Total input	kW	2.21	3.88	3.88
	EER		3.21	3.22	3.22
	Energy label class		A	A	A
	SHF		0.74	0.77	0.77
Heating	Capacity	Btu/h	27,300	47,800	47,800
		kW	7.6(3.5-10.2)	13.8(5.0-16.0)	13.8(5.0-16.0)
	Total input	kW	2.23	4.05	4.05
	COP		3.41	3.41	3.41
	Energy label class		B	B	B
	Booster heater	kW	-	-	-
Power supply	Phase	ϕ	1		3
	Cycle	Hz	50		50
	Voltage	V	230		400
	Breaker size	A	25		16
Indoor unit	Air flow	CMM	17-19	30-38	
	(Low-High)	CFM	600-670	1060-1350	
	External pressure	Pa	0	0	
	Sound level (Low-High)	dB(A)	34-38	44-50	
	External finish		Stainless steel		
	Dimension	W : mm	1136	1520	
		D : mm	650		
		H : mm	280		
		W : inch	44-3/4	59-7/8	
		D : inch	25-5/8		
		H : inch	11		
	Weight	kg	41	56	
		lbs	90	124	
	Unit drain pipe I.D.	mm	26		
		inch	1		
Outdoor unit	Air flow	CMM	55	100	
		CFM	1,940	3,530	
	Sound level at cooling	dB(A)	47	50	
	Sound level at heating	dB(A)	48	52	
	External finish		Ivory Munsell 3Y 7.8/1.1		
	Dimension	W : mm	950	950	
		D : mm	330+30	330+30	
		H : mm	943	1350	
		W : inch	37-3/8	37-3/8	
		D : inch	13 + 1-3/16	13 + 1-3/16	
		H : inch	37-1/8	53-1/8	
	Weight	kg	75	116	130
		lbs	165	256	287
Refrigerant pipe size	Gas side O.D.	mm	15.88	15.88	
		inch	5/8	5/8	
	Liquid side O.D.	mm	9.52	9.52	
		inch	3/8	3/8	
Refrigerant pipe length	Height difference	m	Max. 30	Max. 30	
	Length	m	Max. 50	Max. 75	

NOTE:

1. Rating conditions (ISO T1)
   Cooling Indoor : D.B. 27℃ (80˚F) W.B. 19℃ (66˚F) Outdoor : D.B. 35℃ (95˚F) W.B. 24℃ (75˚F)
   Heating Indoor : D.B. 20℃ (68˚F) Outdoor : D.B. 7℃ (45˚F) W.B. 6℃ (43˚F)
   Refrigerant piping length (one way) : 5m (16ft.)
2. Guaranteed operating range

		Indoor	Outdoor
Cooling	Upper limit	D.B. 35˚C, W.B. 22.5˚C	D.B. 46˚C
	Lower limit	D.B. 19˚C, W.B. 15˚C	D.B. -5˚C ※1
Heating	Upper limit	D.B. 28˚C	D.B. 21˚C, W.B. 15˚C
	Lower limit	D.B. 17˚C	D.B. -11˚C, W.B. -12˚C ※2

3. Guaranteed voltage
   198~264V, 50Hz (RP125Y : 342~457V, 50Hz)
4. Above data based on indicated voltage
   Indoor unit Single phase 230V 50Hz
   Outdoor unit V: Single phase 230V 50Hz, Y: 3 phase 400V 50Hz

※1. If optional Air protect guide installed. D.B.-15℃
※2. For RP125 D.B. -20℃, W.B. -20℃

2-5. FLOOR STANDING TYPE

Model name	Indoor unit		PSA-RP71GA
	Outdoor unit		PUHZ-RP71VHA2
Cooling	Capacity	Btu/h	24,200
		kW	7.1(3.3-8.1)
	Total input	kW	2.20
	EER		3.23
	Energy label class		A
	SHF		0.73
Heating	Capacity	Btu/h	27,300
		kW	7.6(3.5-10.2)
	Total input	kW	2.23
	COP		3.41
	Energy label class		B
	Booster heater	kW	-
Power supply	Phase	ϕ	1
	Cycle	Hz	50
	Voltage	V	230
	Breaker size	A	25
Indoor unit	Air flow	CMM	15-18
	(Low-High)	CFM	530-635
	External pressure	Pa	0
	Sound level (Low-High)	dB(A)	40-45
	External finish		White Munsell 0.70Y 8.59/0.97
	Dimension	W : mm	600
		D : mm	270
		H : mm	1900
		W : inch	23-5/8
		D : inch	10-5/8
		H : inch	74-13/16
	Weight	kg	43
		lbs	98
	Unit drain pipeO.D.	mm	20
		inch	13/16
Outdoor unit	Air flow	CMM	55
		CFM	1,940
	Sound level at cooling	dB(A)	47
	Sound level at heating	dB(A)	48
	External finish		Ivory Munsell 3Y 7.8/1.1
	Dimension	W : mm	950
		D : mm	330+30
		H : mm	943
		W : inch	37-3/8
		D : inch	13 + 1-3/16
		H : inch	37-1/8
	Weight	kg	75
		lbs	165
Refrigerant pipe size	Gas side O.D.	mm	15.88
		inch	5/8
	Liquid side O.D.	mm	9.52
		inch	3/8
Refrigerant pipe length	Height difference	m	Max. 30
	Length	m	Max. 50

NOTE:

1. Rating conditions (ISO T1)
   Cooling Indoor : D.B. 27℃ (80˚F) W.B. 19℃ (66˚F) Outdoor : D.B. 35℃ (95˚F) W.B. 24℃ (75˚F)
   Heating Indoor : D.B. 20℃ (68˚F) Outdoor : D.B. 7℃ (45˚F) W.B. 6℃ (43˚F)
   Refrigerant piping length (one way) : 5m (16ft.)
2. Guaranteed operating range

		Indoor	Outdoor
Cooling	Upper limit	D.B. 35˚C, W.B. 22.5˚C	D.B. 46˚C
	Lower limit	D.B. 19˚C, W.B. 15˚C	D.B. -5˚C ※
Heating	Upper limit	D.B. 28˚C	D.B. 21˚C, W.B. 15˚C
	Lower limit	D.B. 17˚C	D.B. -11˚C, W.B. -12˚C

3. Guaranteed voltage
   198~264V, 50Hz
4. Above data based on indicated voltage
   Indoor unit Single phase 230V 50Hz
   Outdoor unit Single phase 230V 50Hz

※ If optional Air protect guide installed. D.B.-15℃

Model name	Indoor unit		PSA-RP100GA	PSA-RP125GA	PSA-RP140GA
	Outdoor unit		PUHZ-RP100VHA2	PUHZ-RP125VHA2	PUHZ-RP140VHA2
Cooling	Capacity	Btu/h	34,100	42,700	47,800
		kW	10.0(4.9-11.4)	12.4(5.5-14.0)	13.8(5.5-15.3)
	Total input	kW	2.99	4.12	4.91
	EER		3.34	3.01	2.81
	Energy label class		A	B	C
	SHF		0.81	0.75	0.74
Heating	Capacity	Btu/h	38,200	47,800	54,600
		kW	11.2(4.5-14.0)	14.0(5.0-16.0)	16.0(5.0-18.0)
	Total input	kW	3.28	4.11	4.97
	COP		3.41	3.41	3.22
	Energy label class		B	B	C
	Booster heater	kW	-	-	-
Power supply	Phase	ϕ	1		
	Cycle	Hz	50		
	Voltage	V	230		
	Breaker size	A	32		40
Indoor unit	Air flow	CMM	24-31	26-33	27-35
	(Low-High)	CFM	850-1060	920-1165	955-1240
	External pressure	Pa	0		
	Sound level (Low-High)	dB(A)	44-49	46-51	47-52
	External finish		White Munsell 0.70Y 8.59/0.97		
	Dimension	W : mm	600		
		D : mm	350		
		H : mm	1900		
		W : inch	23-5/8		
		D : inch	13-3/4		
		H : inch	74-13/16		
	Weight	kg	51		53
		lbs	112		117
	Unit drain pipeO.D.	mm	20		
		inch	13/16		
Outdoor unit	Air flow	CMM	100		
		CFM	3,530		
	Sound level at cooling	dB(A)	49	50	
	Sound level at heating	dB(A)	51	52	
	External finish		Ivory Munsell 3Y 7.8/1.1		
	Dimension	W : mm	950		
		D : mm	330+30		
		H : mm	1350		
		W : inch	37-3/8		
		D : inch	13 + 1-3/16		
		H : inch	53-1/8		
	Weight	kg	121	116	
		lbs	267	256	
Refrigerant pipe size	Gas side O.D.	mm	15.88		
		inch	5/8		
	Liquid side O.D.	mm	9.52		
		inch	3/8		
Refrigerant pipe length	Height difference	m	Max. 30		
	Length	m	Max. 75		

NOTE:

1. Rating conditions (ISO T1)
   Cooling Indoor : D.B. 27℃ (80˚F) W.B. 19℃ (66˚F) Outdoor : D.B. 35℃ (95˚F) W.B. 24℃ (75˚F)
   Heating Indoor : D.B. 20℃ (68˚F) Outdoor : D.B. 7℃ (45˚F) W.B. 6℃ (43˚F)
   Refrigerant piping length (one way) : 5m (16ft.)
2. Guaranteed operating range

		Indoor	Outdoor
Cooling	Upper limit	D.B. 35˚C, W.B. 22.5˚C	D.B. 46℃
	Lower limit	D.B. 19˚C, W.B. 15˚C	D.B. -5℃ ※
Heating	Upper limit	D.B. 28˚C	D.B. 21℃, W.B. 15℃
	Lower limit	D.B. 17˚C	D.B. -20℃, W.B. -20℃

3. Guaranteed voltage
   198~264V, 50Hz
4. Above data based on indicated voltage
   Indoor unit Single phase 230V 50Hz
   Outdoor unit Single phase 230V 50Hz

※ If optional Air protect guide installed. D.B.-15℃

Model name	Indoor unit		PSA-RP100GA	PSA-RP125GA	PSA-RP140GA
	Outdoor unit		PUHZ-RP100YHA2	PUHZ-RP125YHA2	PUHZ-RP140YHA2
Cooling	Capacity	Btu/h	34,100	42,700	47,800
		kW	10.0(4.9-11.4)	12.4(5.5-14.0)	13.8(5.5-15.3)
	Total input	kW	2.99	4.12	4.91
	EER		3.34	3.01	2.81
	Energy label class		A	B	C
	SHF		0.81	0.75	0.74
Heating	Capacity	Btu/h	38,200	47,800	54,600
		kW	11.2(4.5-14.0)	14.0(5.0-16.0)	16.0(5.0-18.0)
	Total input	kW	3.28	4.11	4.97
	COP		3.41	3.41	3.22
	Energy label class		B	B	C
	Booster heater	kW	-	-	-
Power supply	Phase	ϕ	3		
	Cycle	Hz	50		
	Voltage	V	400		
	Breaker size	A	16		
Indoor unit	Air flow	CMM	24-31	26-33	27-35
	(Low-High)	CFM	850-1060	920-1165	955-1240
	External pressure	Pa	0		
	Sound level (Low-High)	dB(A)	44-49	46-51	47-52
	External finish		White Munsell 0.70Y 8.59/0.97		
	Dimension	W : mm	600		
		D : mm	350		
		H : mm	1900		
		W : inch	23-5/8		
		D : inch	13-3/4		
		H : inch	74-13/16		
	Weight	kg	51	51	53
		lbs	112	112	117
	Unit drain pipeO.D.	mm	20		
		inch	13/16		
Outdoor unit	Air flow	CMM	100		
		CFM	3,530		
	Sound level at cooling	dB(A)	49	50	
	Sound level at heating	dB(A)	51	52	
	External finish		Ivory Munsell 3Y 7.8/1.1		
	Dimension	W : mm	950		
		D : mm	330+30		
		H : mm	1350		
		W : inch	37-3/8		
		D : inch	13 + 1-3/16		
		H : inch	53-1/8		
	Weight	kg	135	130	
		lbs	298	287	
Refrigerant pipe size	Gas side O.D.	mm	15.88		
		inch	5/8		
	Liquid side O.D.	mm	9.52		
		inch	3/8		
Refrigerant pipe length	Height difference	m	Max. 30		
	Length	m	Max. 75		

NOTE:

1. Rating conditions (ISO T1)
   Cooling Indoor : D.B. 27℃ (80˚F) W.B. 19℃ (66˚F) Outdoor : D.B. 35℃ (95˚F) W.B. 24℃ (75˚F)
   Heating Indoor : D.B. 20℃ (68˚F) Outdoor : D.B. 7℃ (45˚F) W.B. 6℃ (43˚F)
   Refrigerant piping length (one way) : 5m (16ft.)
2. Guaranteed operating range

		Indoor	Outdoor
Cooling	Upper limit	D.B. 35˚C, W.B. 22.5˚C	D.B. 46˚C
	Lower limit	D.B. 19˚C, W.B. 15˚C	D.B. -5˚C ※
Heating	Upper limit	D.B. 28˚C	D.B. 21˚C, W.B. 15˚C
	Lower limit	D.B. 17˚C	D.B. -20˚C, W.B. -20˚C

3. Guaranteed voltage
   Indoor unit 198~264V, 50Hz
   Outdoor unit 342~457V, 50Hz
4. Above data based on indicated voltage
   Indoor unit Single phase 230V 50Hz
   Outdoor unit 3 phase 400V 50Hz

※ If optional Air protect guide installed. D.B.-15℃

3 OUTLINES AND DIMENSIONS

INDOOR UNIT

Unit : mm

PLA-RP35AA PLA-RP50AA PLA-RP60AA PLA-RP71AA
PLA-RP100AA2 PLA-RP125AA2 PLA-RP140AA2

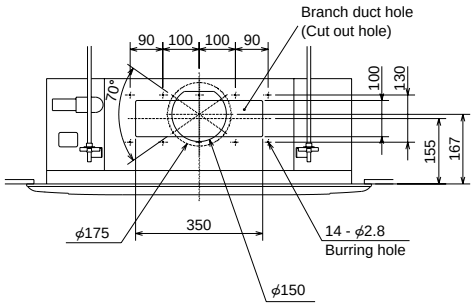

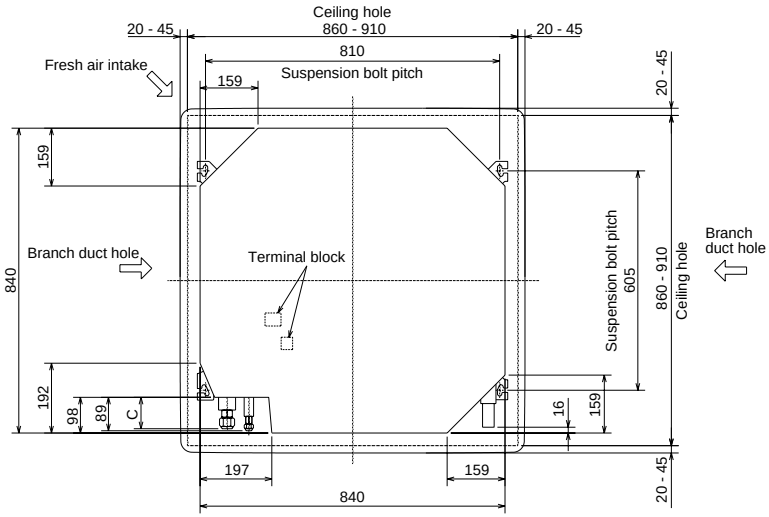

Detail drawing of fresh air intake

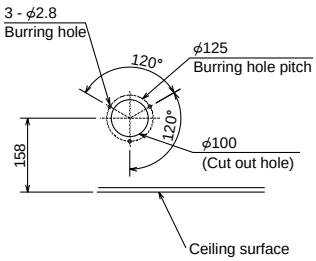

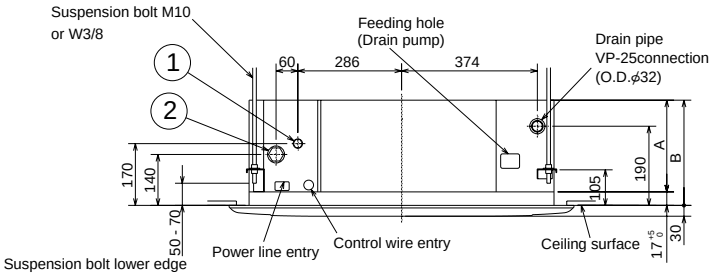

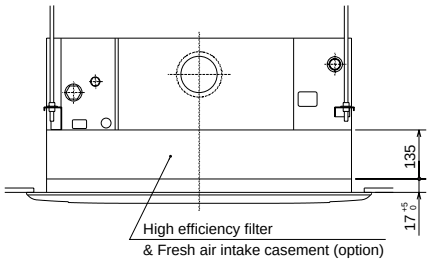

A (WIRELESS PANEL)

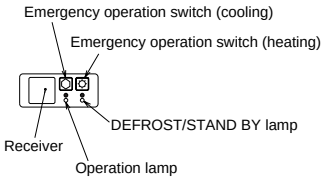

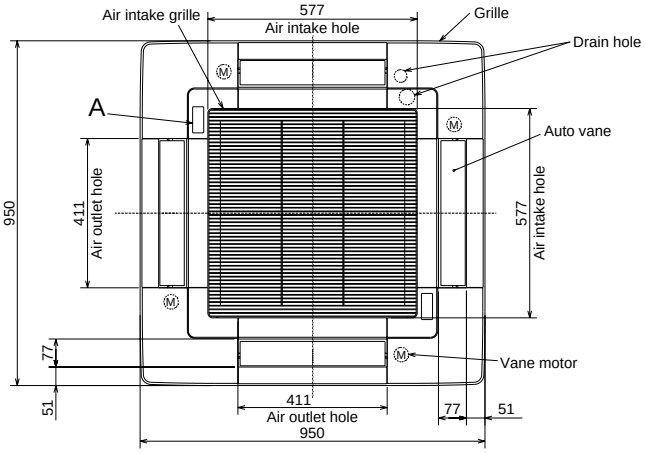

Use the current nuts meeting the pipe size of the outdoor unit.
Available pipe size

	RP35, 50	RP60	RP71	RP100, 125, 140
① LIQUID SIDE	ϕ6.35 ○	ϕ6.35	—	—
	ϕ9.52	ϕ9.52 ○	ϕ9.52 ○	ϕ9.52 ○
② GAS SIDE	ϕ12.7 ○	—	—	—
	ϕ15.88	ϕ15.88 ○	ϕ15.88 ○	ϕ15.88 ○
	—	—	—	ϕ19.05

○ Factory flare nut attachment to the heat-exchanger.

Models	A	B	C
PLA-RP35,50AA PLA-RP60,71AA	241	258	80
PLA-RP100,125,140AA2	281	298	84

PEAD-RP35EA2
PEAD-RP50EA
PEAD-RP60EA

Unit : mm

Model	A	B	C	D	E	F	G
RP35,50	772	305	–	830	804	R410A Outdoor unit : 6.35 ※ R407C Outdoor unit : 9.52	R410A Outdoor unit : 12.7 ※ R407C Outdoor unit : 15.88
RP60	1012	280	290	1070	1044	Outdoor unit (SUZ) : 6.35 R407C Outdoor unit : 9.52 ※	15.88

※ Setting at shipment

① Refrigerant piping flare connection (liquid ϕ F copper tube):HP
② Refrigerant piping flare connection (gas ϕG copper tube):LP
③ Drain R1(External thread)
④ Electrical parts box
⑤ Drain Pump (Option)
⑥ Drain Pipe (Option) ... Flexible joint VP-25(I.D. ϕ32) } Set
⑦ Filter

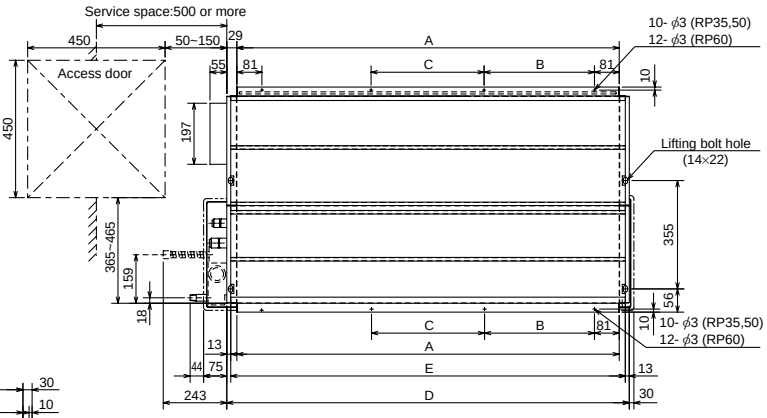

In case of rear inlet

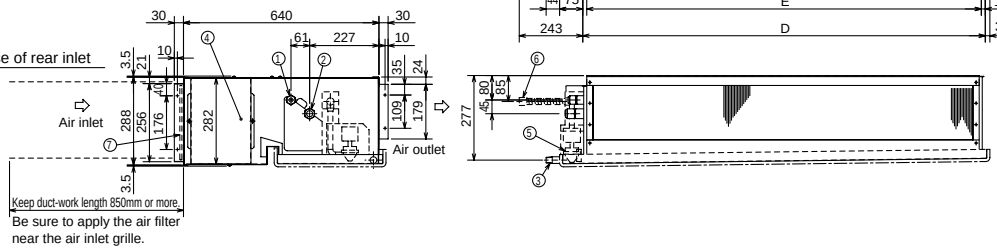

In case of bottom inlet

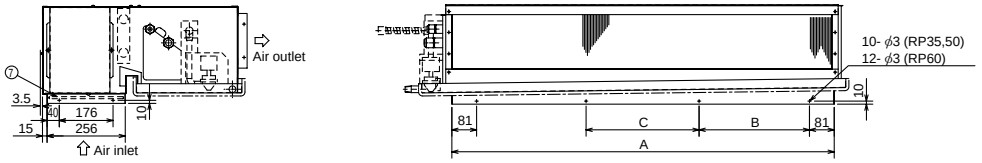

PEAD-RP71EA
PEAD-RP100EA2
PEAD-RP125EA
PEAD-RP140EA

Model	A	B	C	D	E	F
RP71	1012	280	290	1070	1044	15.88
RP100,125	1252	360	370	1310	1284	R410A Outdoor unit : 15.88 ※
RP140	1552	460	470	1610	1584	R407C outdoor unit : 19.05

※ Setting at shipment

① Refrigerant piping flare connection (liquid ϕ9.52 copper tube):HP
② Refrigerant piping flare connection (gas ϕF copper tube):LP
③ Drain R1 (External thread)
④ Electrical parts box
⑤ Drain Pump (Option)
⑥ Drain Pipe (Option) ... Flexible joint VP25(I.D.ϕ32) } Set
⑦ Filter

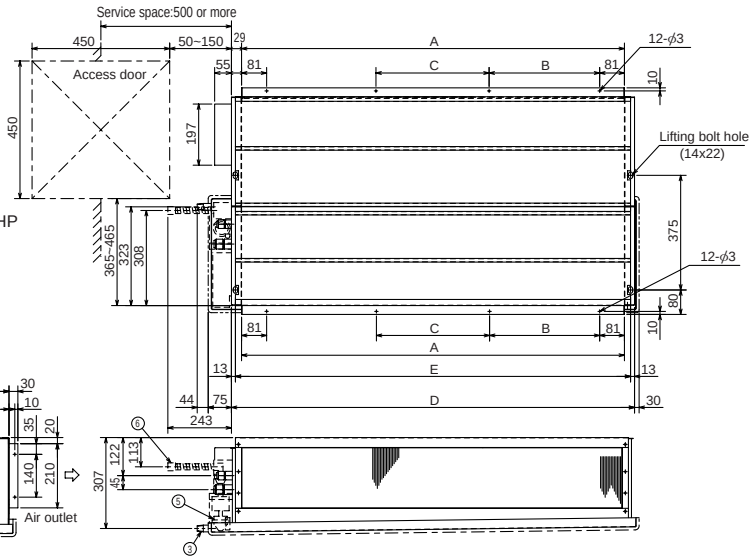

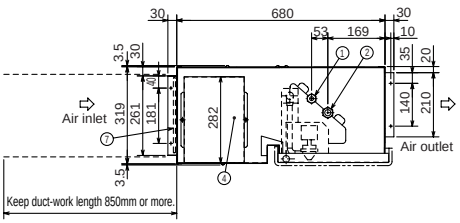

PEAD-RP60GA
PEAD-RP71GA
PEAD-RP100GA

Unit : mm

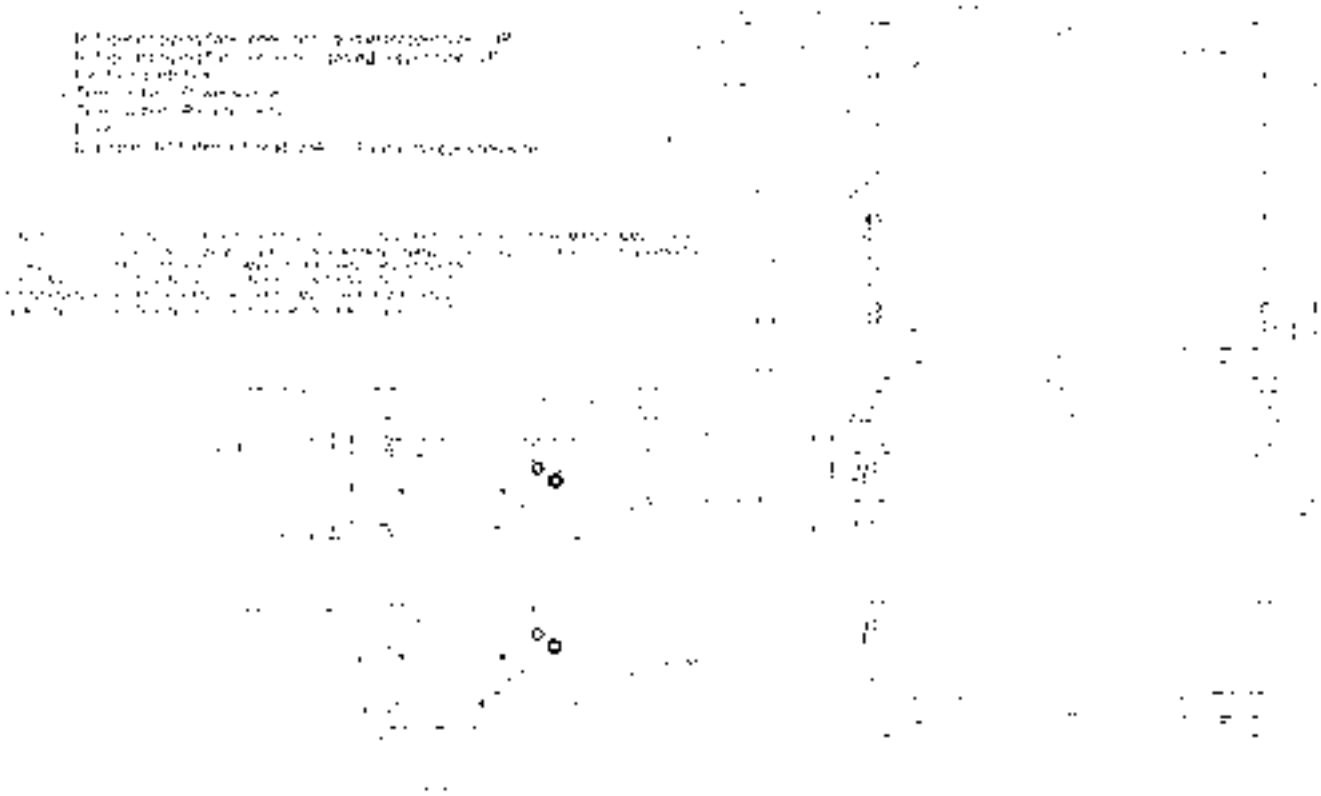

Model	A	B	C	D	E	F	G	H	J
RP60	1125	1090	1050	1012	7	840	8	Outdoor unit(SUZ) : 6.35 Other outdoor unit : 9.52 ※	15.88
RP71	1125	1090	1050	1012	7	840	8	9.52	15.88
RP100	1365	1330	1290	1252	9	1080	10	9.52	R410A Outdoor unit : 15.88 ※ R407C Outdoor unit : 19.05

※ Setting at shipment

INDOOR UNIT
PKA-RP35GAL PKA-RP50GAL

Unit : mm

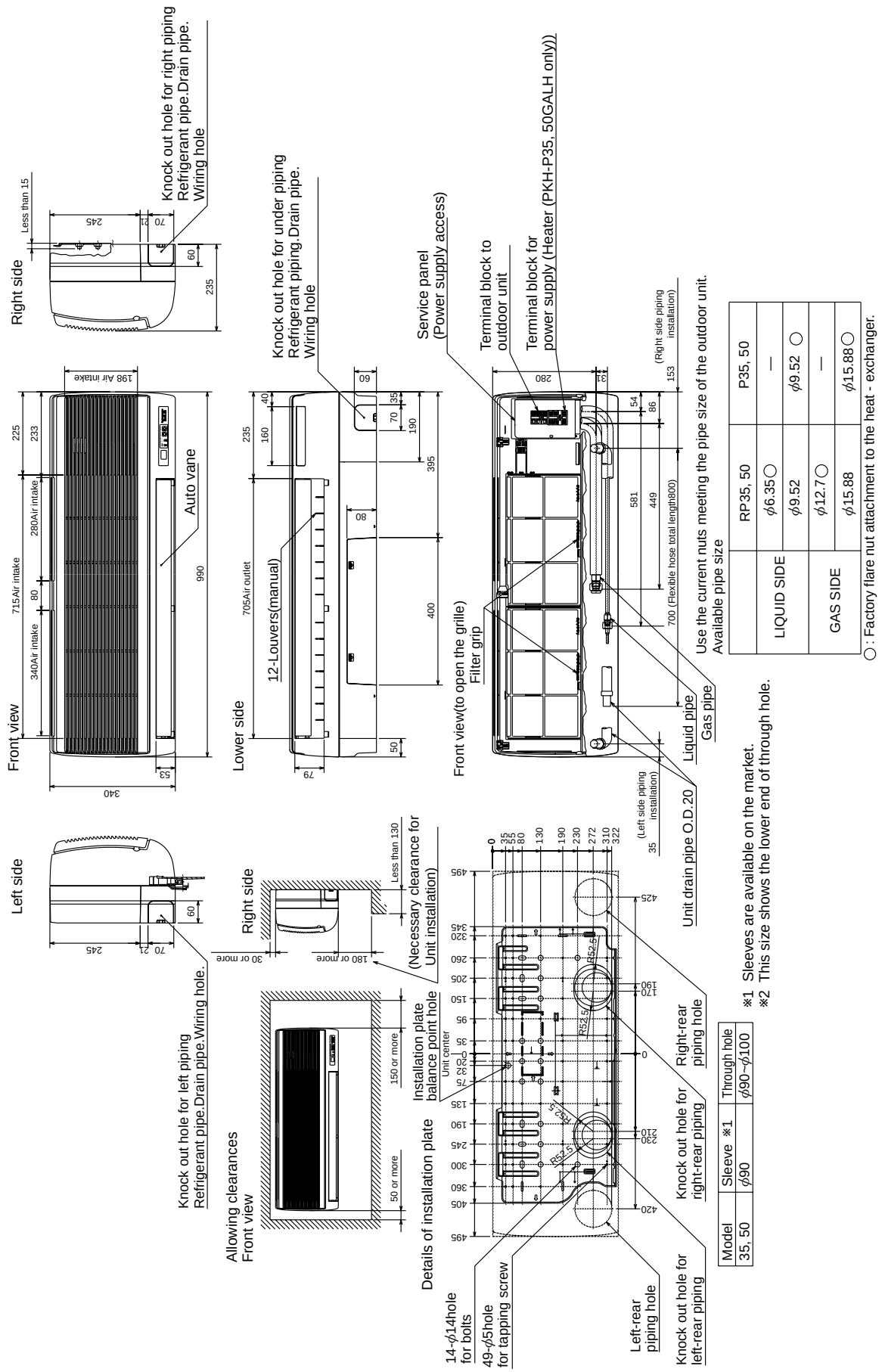

PKA-RP50FAL2
PKA-RP60FAL
PKA-RP71FAL

Unit : mm

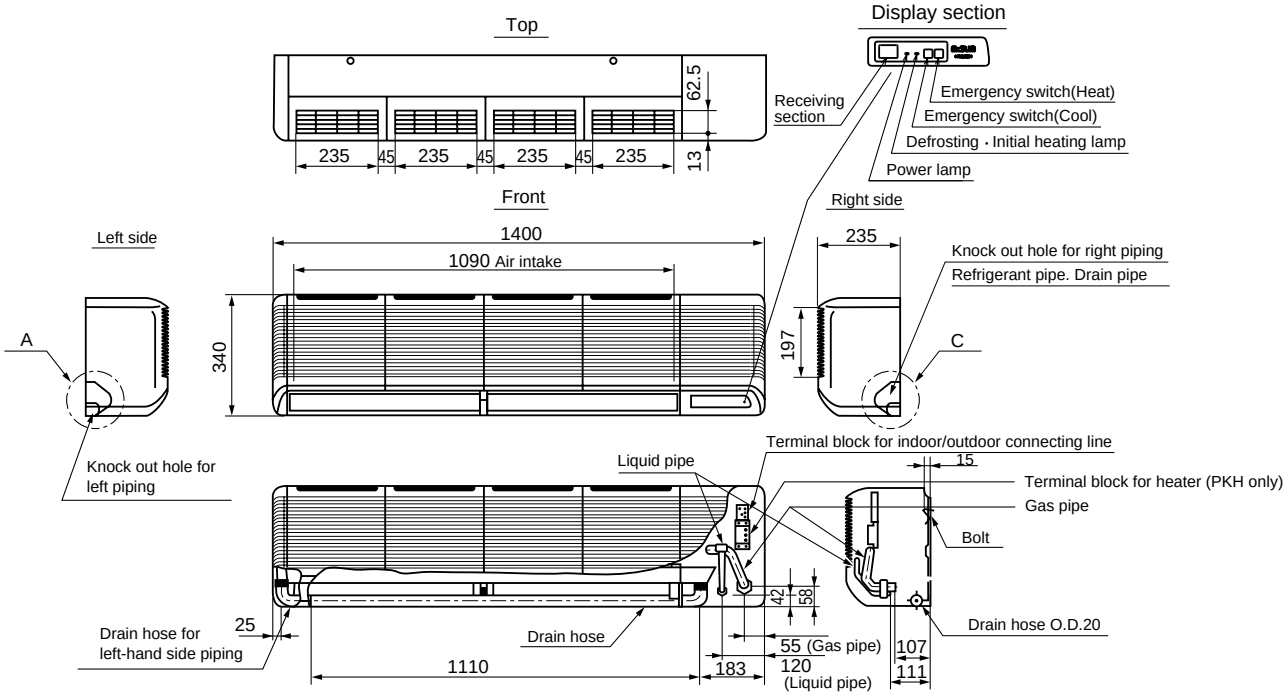

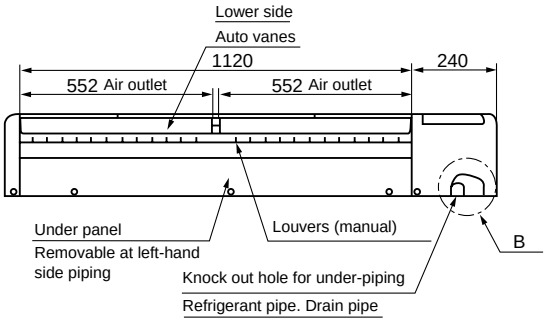

Sleeve ※1	Through hole
ϕ 90	ϕ 90~ ϕ 100

※1 Sleeves are available on the market.

Use the current nuts meeting the pipe size of the outdoor unit.

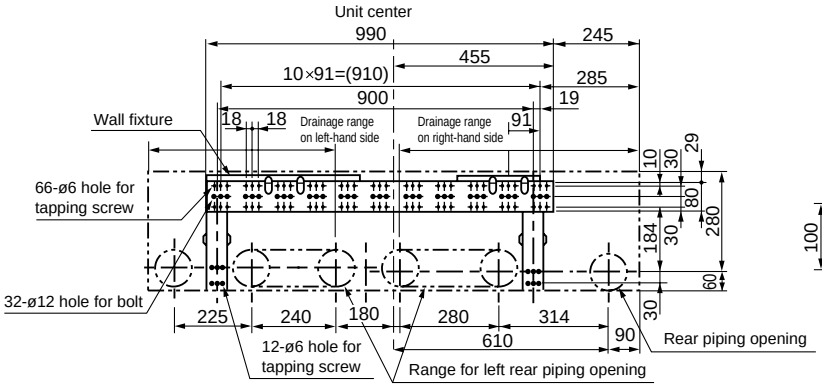

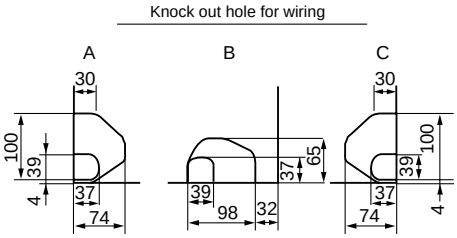

Available pipe size

	RP50	RP60,71 / P60,71
⑤LIQUID SIDE	ϕ 6.35 ○	——
	ϕ 9.52	ϕ 9.52 ○
⑥GAS SIDE	ϕ 12.7 ○	——
	ϕ 15.88	ϕ 15.88 ○
	——	——

○:Factory flare nut attachment to the heat-exchanger.

PKA-RP100FAL

Unit : mm

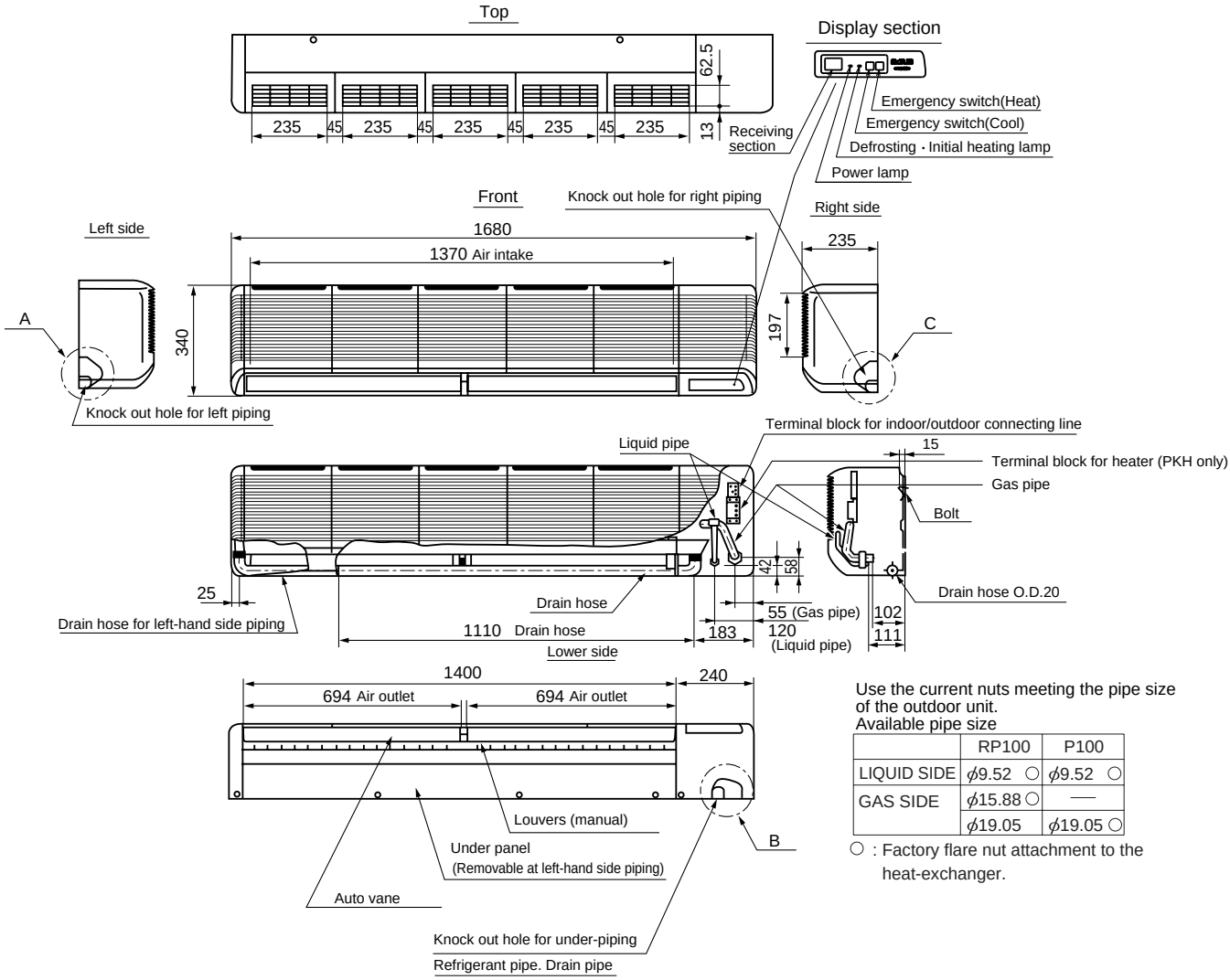

Use the current nuts meeting the pipe size of the outdoor unit.
Available pipe size

	RP100	P100
LIQUID SIDE	ϕ9.52 ○	ϕ9.52 ○
GAS SIDE	ϕ15.88 ○	—
	ϕ19.05	ϕ19.05 ○

○ : Factory flare nut attachment to the heat-exchanger.

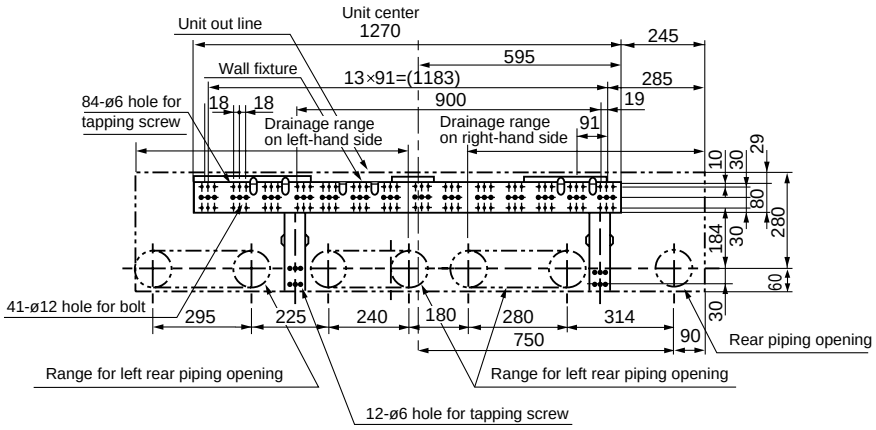

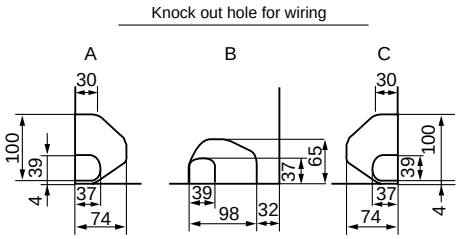

INDOOR UNIT
PCA-RP50GA

Unit : mm

NOTES:
1. Use M10 or W3/8 screws for anchor bolt.
2. When optional drain lift-up mechanism is installed, always provide upward piping for refrigerant piping.

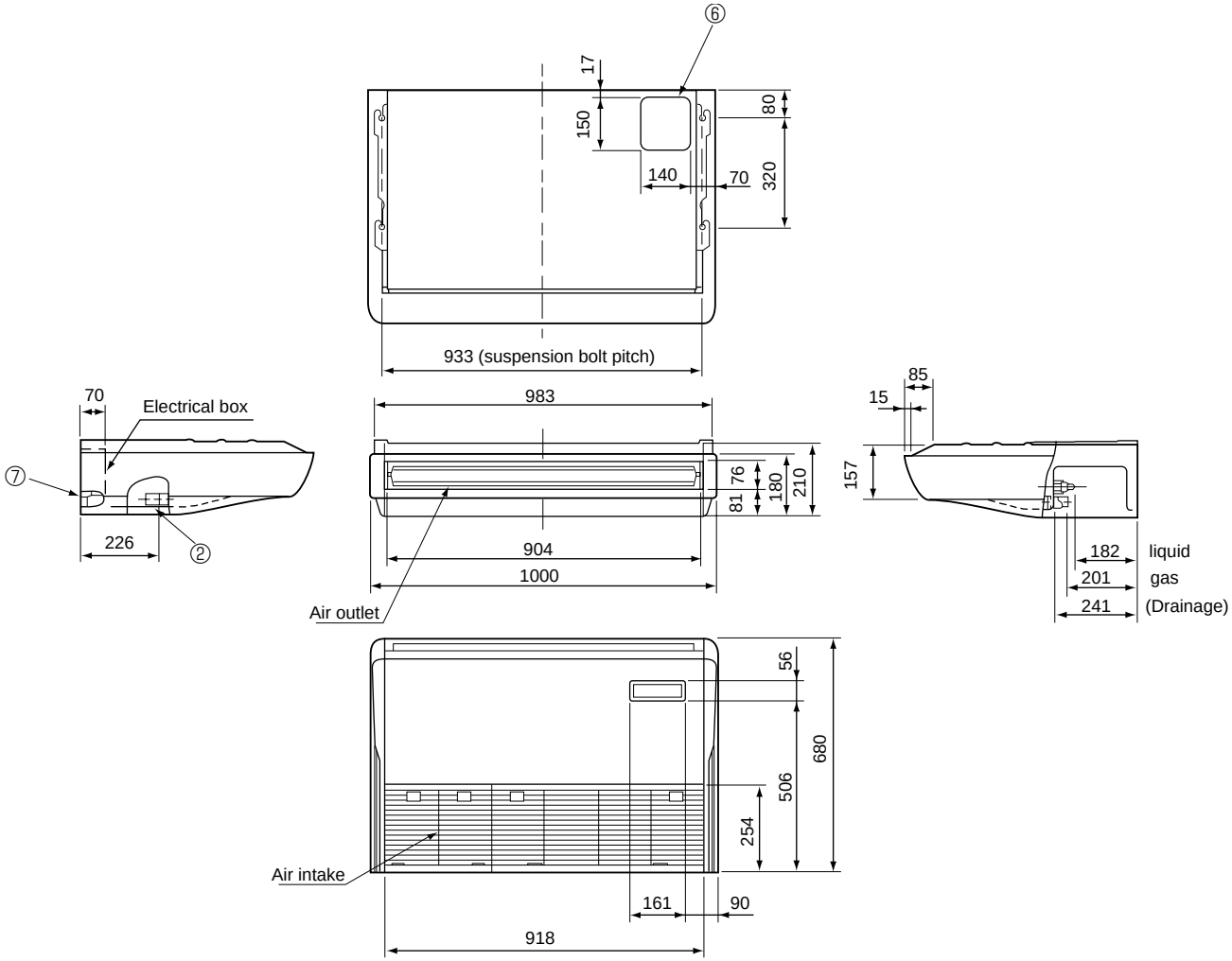

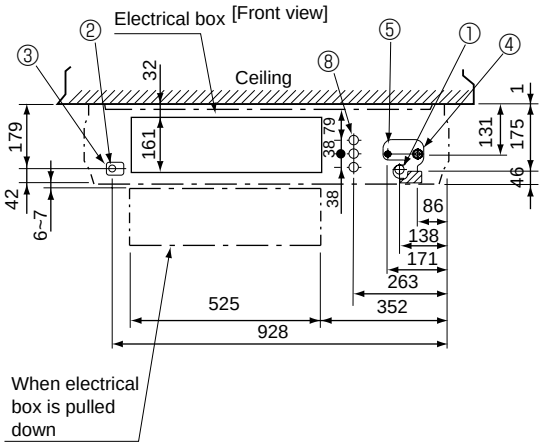

① Drainage pipe connection (26mm I.D.)
② Drainage pipe connection (for the left arrangement)
③ Knock out hole for left drain-piping arrangement
④ Refrigerant-pipe connection (gas pipe side/flared connection)
⑤ Refrigerant-pipe connection (liquid pipe side/flared connection)
⑥ Knock out hole for upper drain pipe arrangement
⑦ Knock out hole for left drain pipe arrangement
⑧ Knock out hole for wiring arrangement

Use the current nuts meeting the pipe size of the outdoor unit.

Available pipe size

	RP50	P50
⑤ LIQUID SIDE	ϕ6.35 ○	—
	ϕ9.52	ϕ9.52 ○
④ GAS SIDE	ϕ12.7 ○	—
	ϕ15.88	ϕ15.88 ○

○ : Factory flare nut attachment to the heat-exchanger.

PCA-RP50GA2
PCA-RP60GA
PCA-RP71GA

Unit : mm

NOTES:
1. Use M10 or W3/8 screws for anchor bolt.
2. When optional drain lift-up mechanism is installed, always provide upward piping for refrigerant piping.

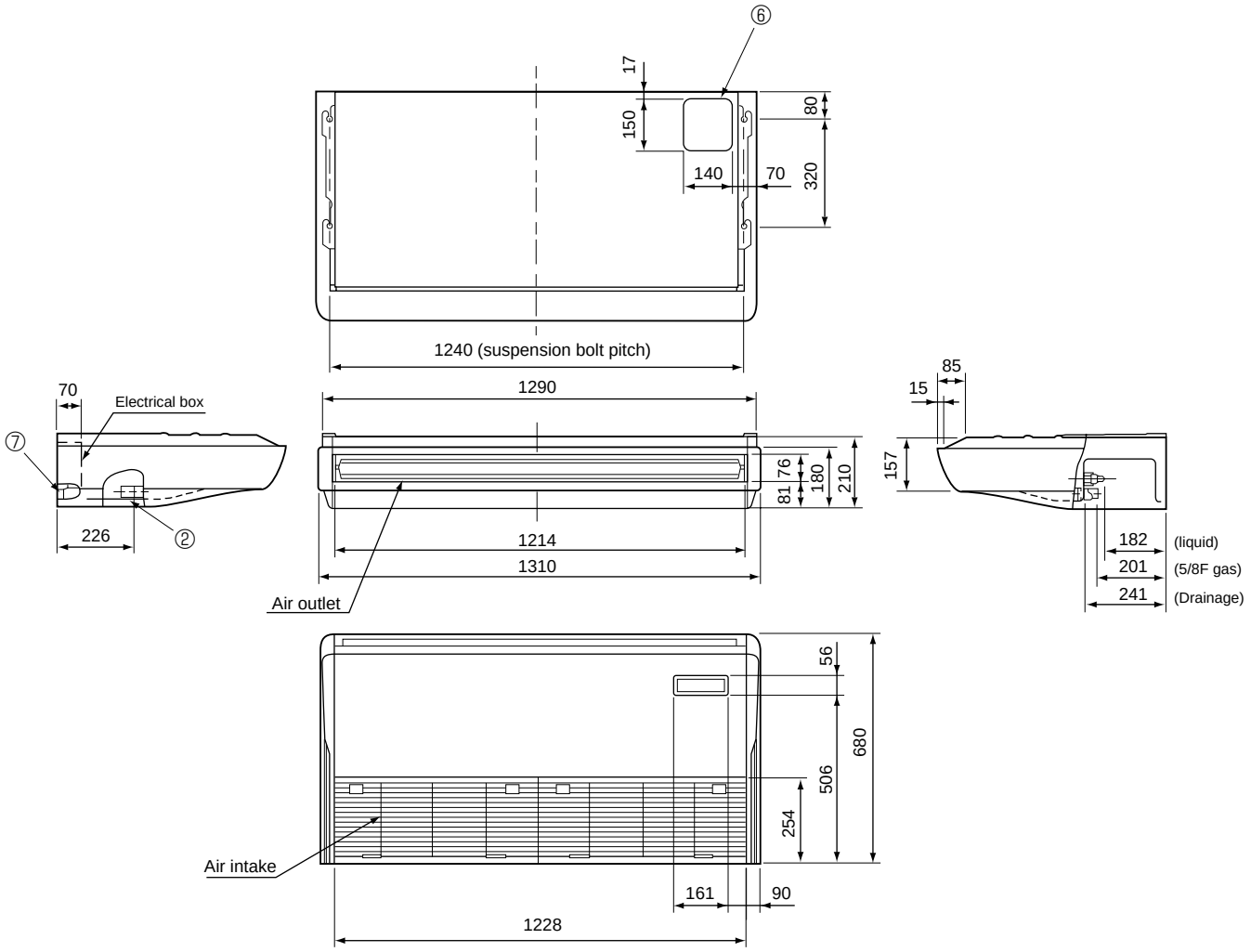

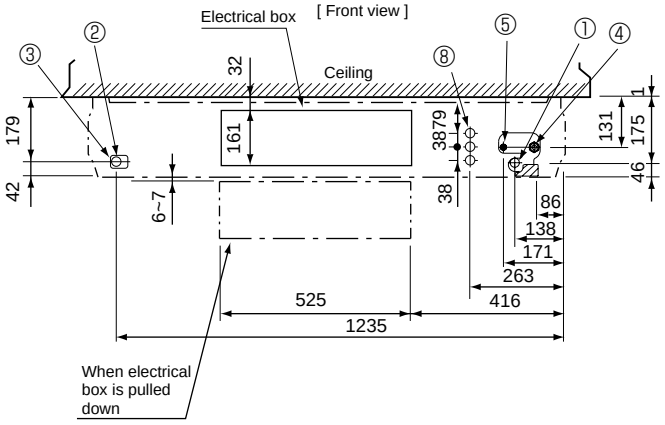

① Drainage pipe connection (26mm I.D.)
② Drainage pipe connection (for the left arrangement)
③ Knock out hole for left drain-piping arrangement
④ Refrigerant-pipe connection (gas pipe side/flared connection)
⑤ Refrigerant-pipe connection (liquid pipe side/flared connection)
⑥ Knock out hole for upper drain pipe arrangement
⑦ Knock out hole for left drain pipe arrangement
⑧ Knock out hole for wiring arrangement

Use the current nuts meeting the pipe size of the outdoor unit.

Available pipe size

	RP50	RP60	RP71,P60,P71
⑤ LIQUID SIDE	ϕ6.35 ○	ϕ6.35	—
	ϕ9.52	ϕ9.52 ○	ϕ9.52 ○
④ GAS SIDE	ϕ12.7 ○	—	—
	ϕ15.88	ϕ15.88 ○	ϕ15.88 ○
	—	—	—

○ : Factory flare nut attachment to the heat-exchanger.

PCA-RP100GA

Unit : mm

NOTES:
1. Use M10 or W3/8 screws for anchor bolt.
2. When optional drain lift-up mechanism is installed, always provide upward piping for refrigerant piping.

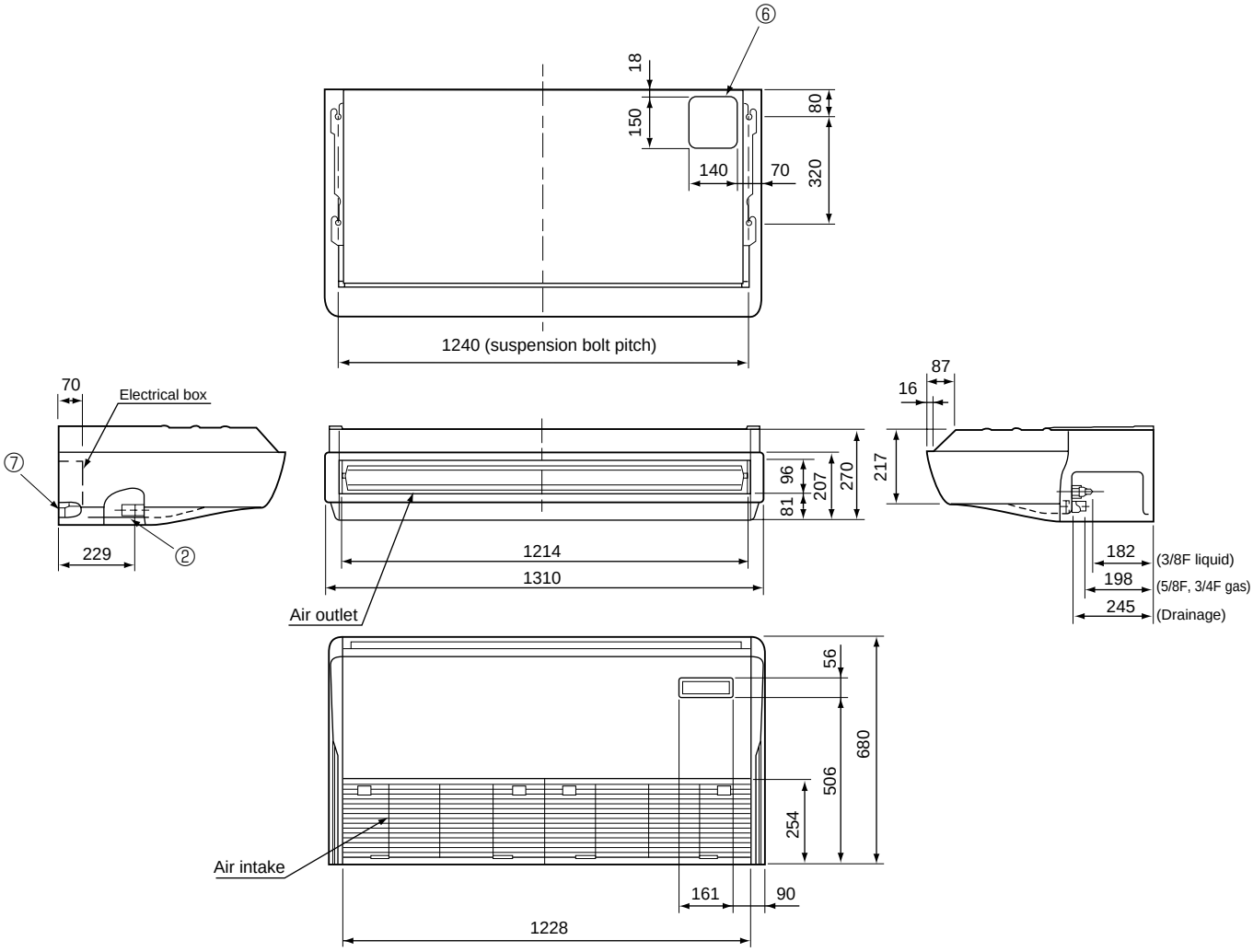

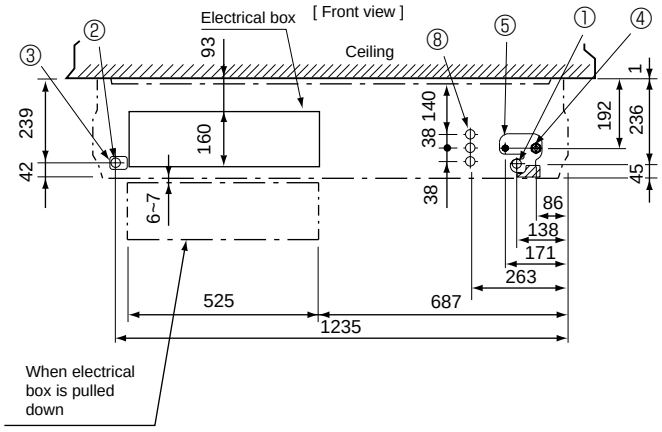

① Drainage pipe connection (26mm I.D.)
② Drainage pipe connection (for the left arrangement)
③ Knock out hole for left drain-piping arrangement
④ Refrigerant-pipe connection (gas pipe side/flared connection)
⑤ Refrigerant-pipe connection (liquid pipe side/flared connection)
⑥ Knock out hole for upper drain pipe arrangement
⑦ Knock out hole for left drain pipe arrangement
⑧ Knock out hole for wiring arrangement

Use the current nuts meeting the pipe size of the outdoor unit.

Available pipe size

	RP100	P100
⑤ LIQUID SIDE	—	—
	ϕ9.52 ○	ϕ9.52 ○
④ GAS SIDE	—	—
	ϕ15.88 ○	—
	ϕ19.05	ϕ19.05 ○

○ :Factory flare nut attachment to the heat-exchanger.

PCA-RP125GA
PCA-RP140GA

Unit : mm

NOTES:
1. Use M10 or W3/8 screws for anchor bolt.
2. When optional drain lift-up mechanism is installed, always provide upward piping for refrigerant piping.

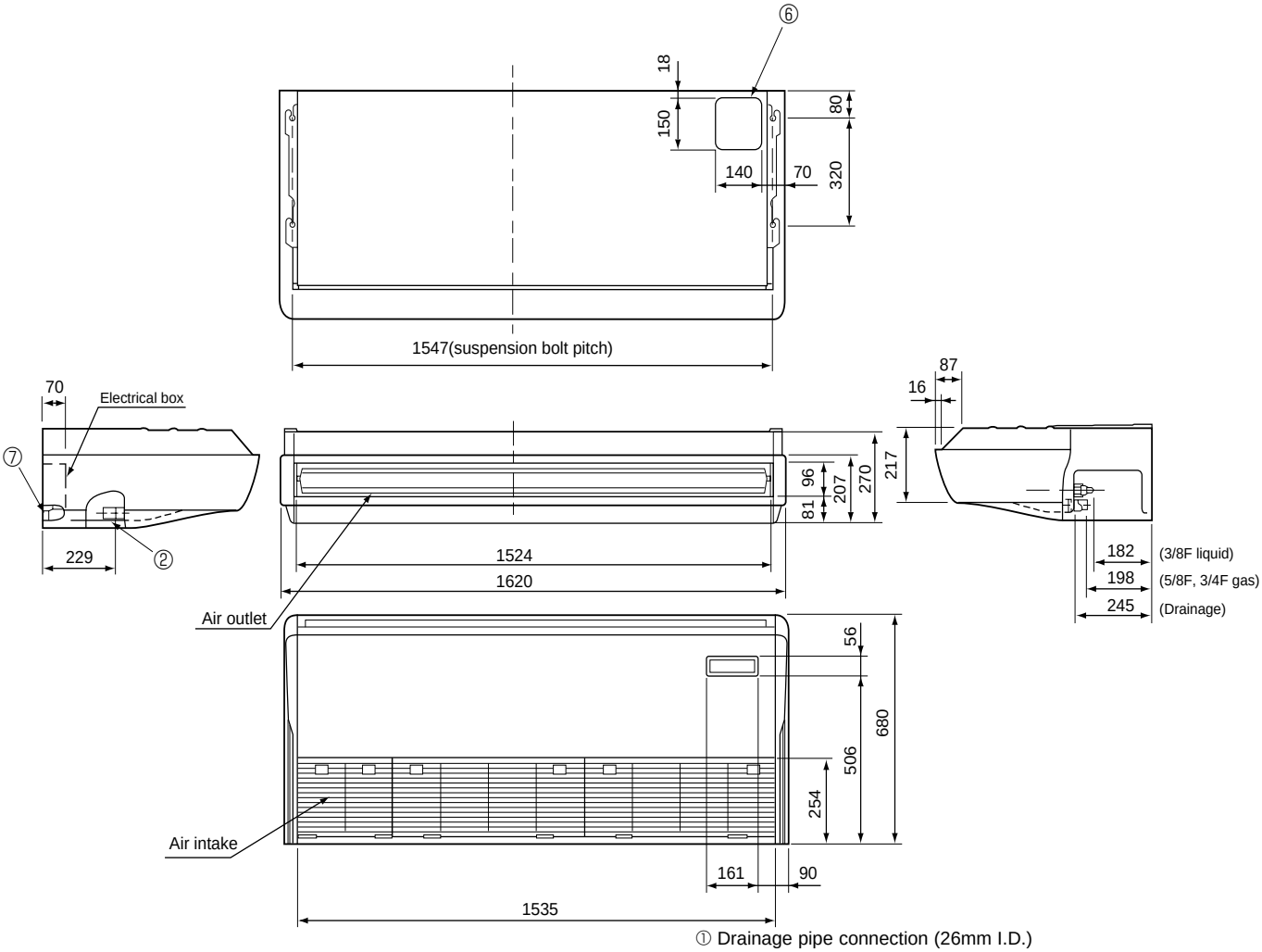

① Drainage pipe connection (26mm I.D.)
② Drainage pipe connection (for the left arrangement)
③ Knock out hole for left drain-piping arrangement
④ Refrigerant-pipe connection (gas pipe side/flared connection)
⑤ Refrigerant-pipe connection (liquid pipe side/flared connection)
⑥ Knock out hole for upper drain pipe arrangement
⑦ Knock out hole for left drain pipe arrangement
⑧ Knock out hole for wiring arrangement

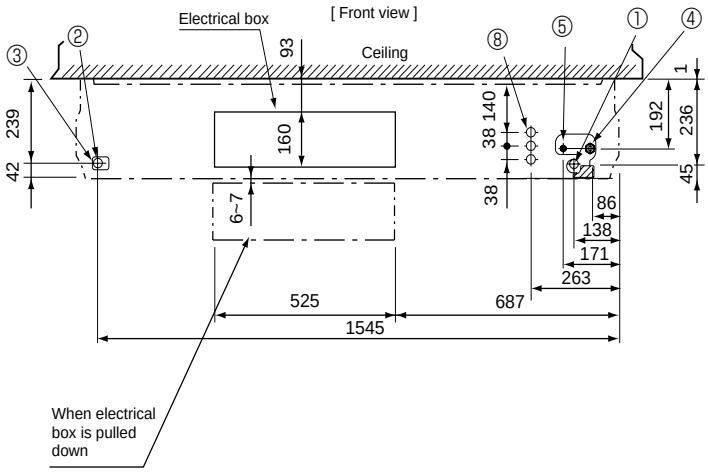

Use the current nuts meeting the pipe size of the outdoor unit.

Available pipe size

	RP125,140	P125,140
⑤ LIQUID SIDE	—	—
	ϕ9.52 ○	ϕ9.52 ○
④ GAS SIDE	—	—
	ϕ15.88○	—
	ϕ19.05	ϕ19.05○

○ :Factory flare nut attachment to the heat-exchanger.

PCA-RP71HA

Unit : mm

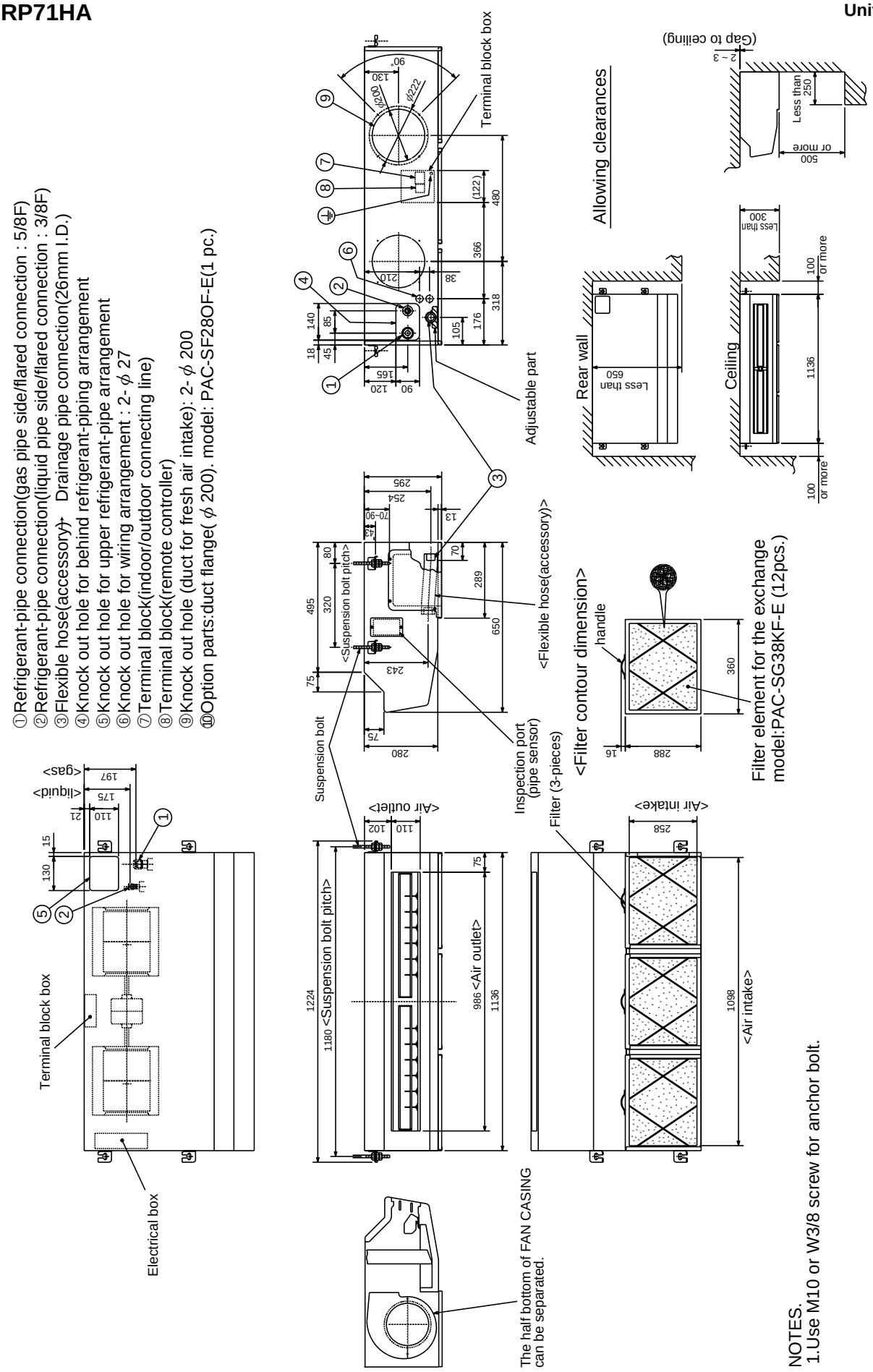

①Refrigerant-pipe connection(gas pipe side/flared connection : 5/8F, 3/4F)
②Refrigerant-pipe connection(liquid pipe side/flared connection : 3/8F)
③Flexible hose(accessory) Drainage pipe connection(26mm I.D.)
④Knock out hole for behind refrigerant-piping arrangement
⑤Knock out hole for upper refrigerant-pipe arrangement
⑥Knock out hole for wiring arrangement : 2- ϕ 27
⑦Terminal block(indoor/outdoor connecting line)
⑧Terminal block(remote controller)
⑨Knock out hole (duct for fresh air intake) : 2- ϕ 200
⑩Option parts:duct flange(ϕ 200). model: PAC-SF28OF-E(1 pc.)

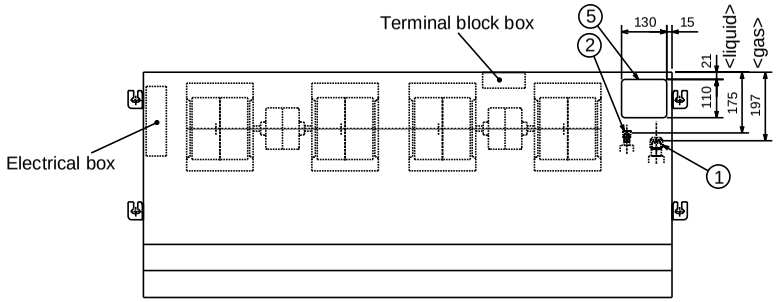

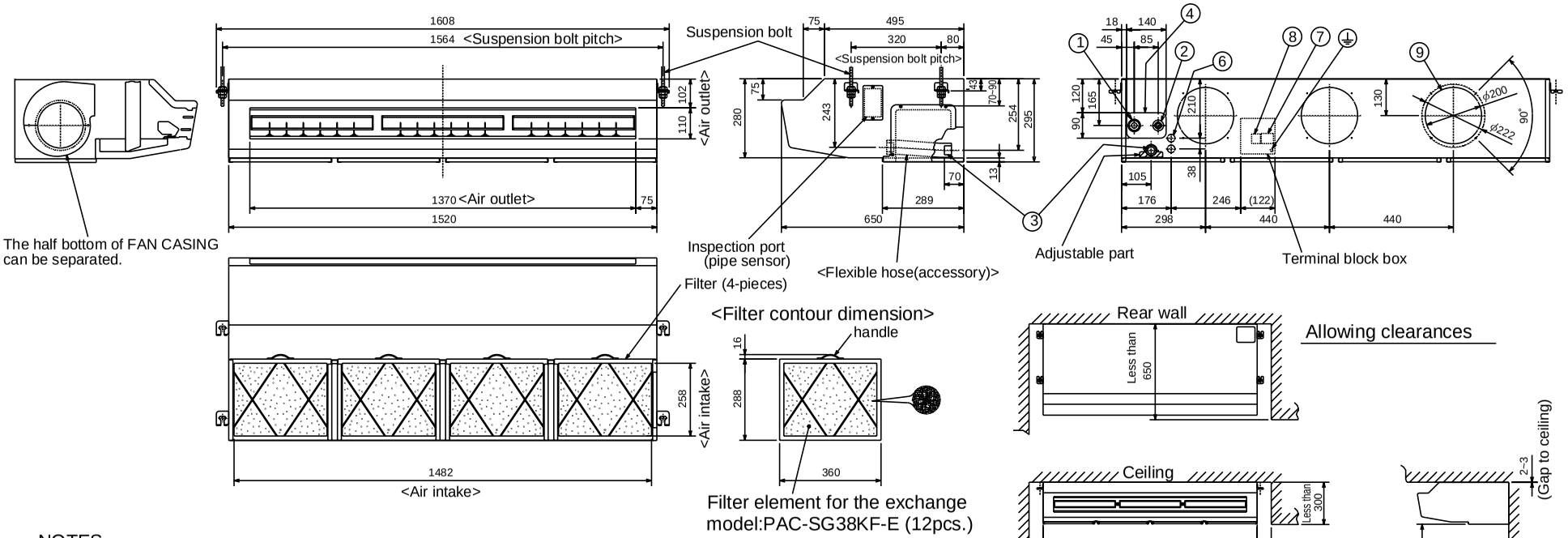

<Filter contour dimension>

Filter element for the exchange model:PAC-SG38KF-E (12pcs.)

Allowing clearances

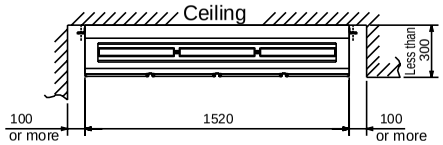

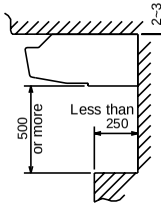

NOTES.
1.Use M10 or W3/8 screw for anchor bolt.

Use the current nuts meeting the pipe size of the outdoor unit.

Available pipe size

	RP125
② LIQUID SIDE	ϕ 9.52 ○
① GAS SIDE	ϕ 15.88 ○
	ϕ 19.05

○: Factory flare nut attachment to the heat-exchanger

Unit : mm

INDOOR UNIT
PSA-RP71GA

Unit : mm

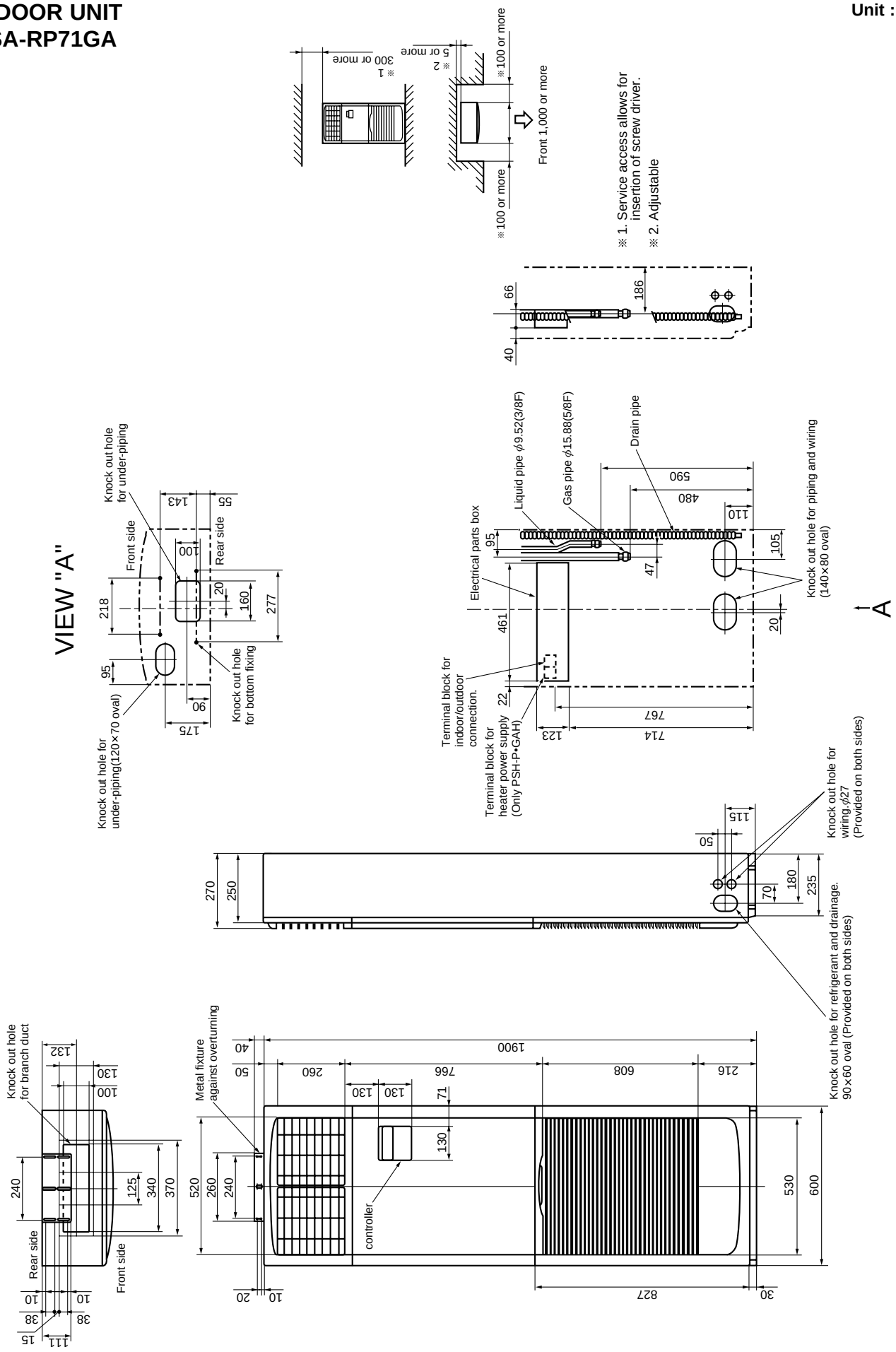

PSA-RP100GA
PSA-RP125GA
PSA-RP140GA

Unit : mm

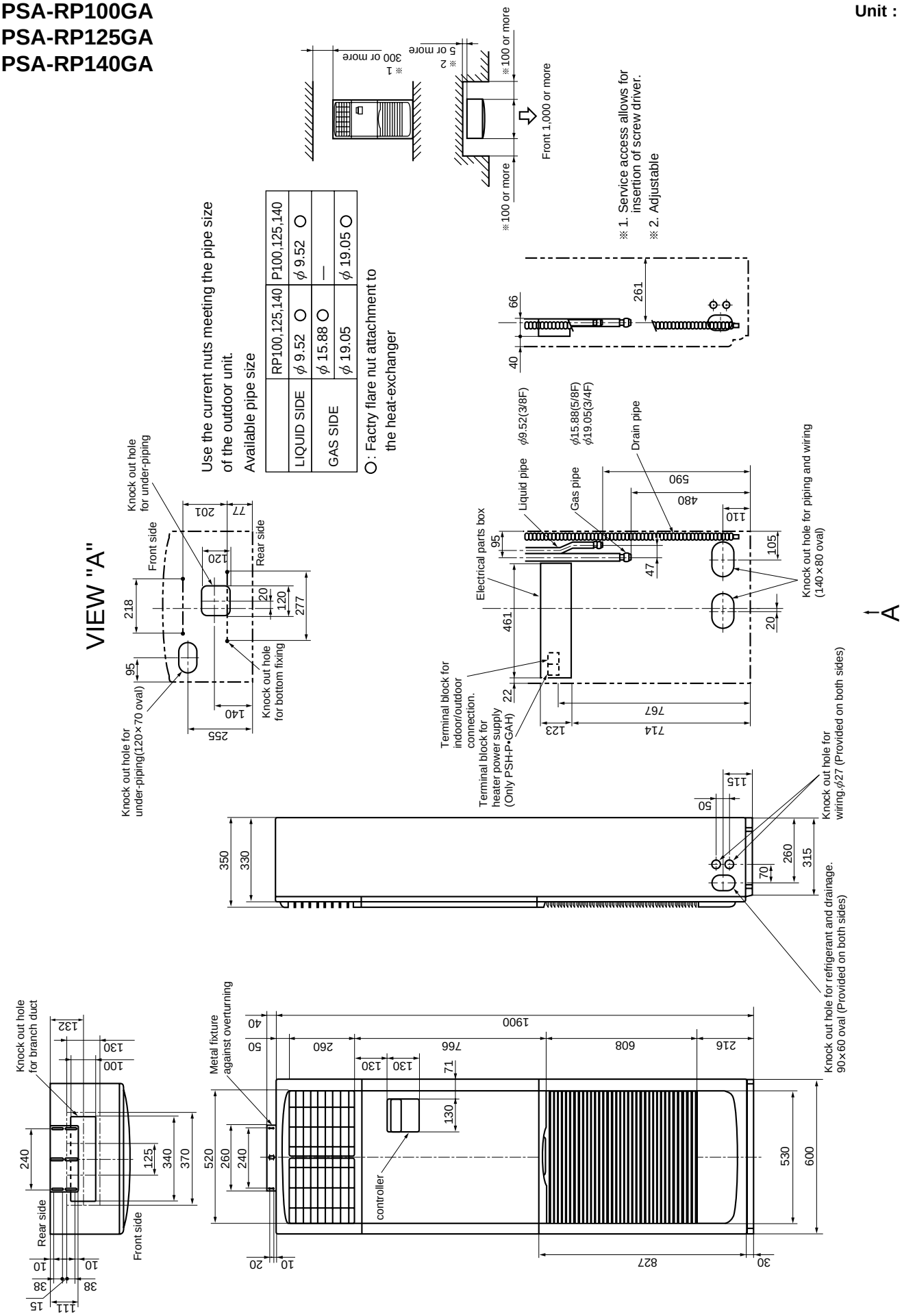

OUTDOOR UNIT
PUHZ-RP35VHA2
PUHZ-RP50VHA2

Unit : mm

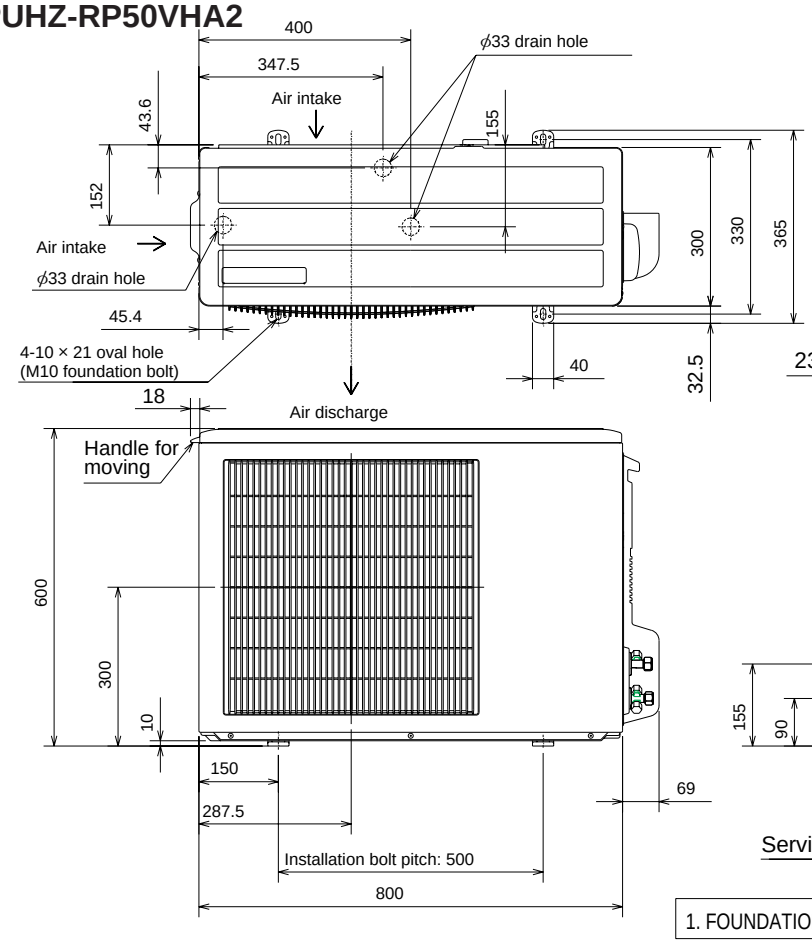

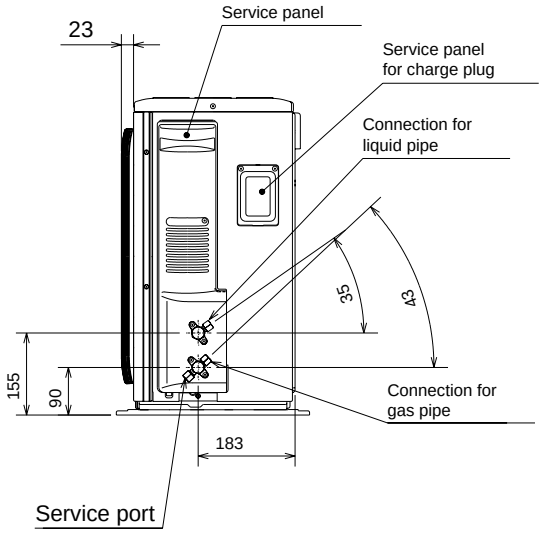

1. FOUNDATION BOLTS

Please secure the unit firmly with 4 foundation (M10) bolts. (Bolts, washer and nut must be purchased locally.)

<Foundation bolt height>

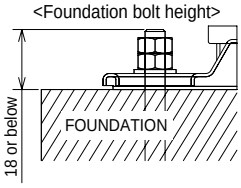

2. PIPING-WIRING DIRECTION

Piping and wiring connection can be made from the rear direction only.

3. ATTACHING THE CONDUIT

In order to attach the conduit, it is necessary to fix the metal plate with 2 screws to the back panel. Procure the metal plate and make screw holes locally. It is recommended to use the metal plate shown below. Align the metal plate to the marks on the unit and attach it.

※ The position and the size of conduit hole depend on the conduit to be used.

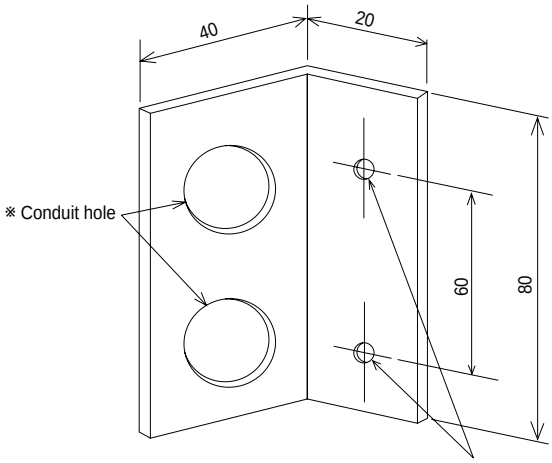

Holes for metal plate fixing screw
※ The size of hole depends on the screw to be used.

Free space around the outdoor unit (basic example)

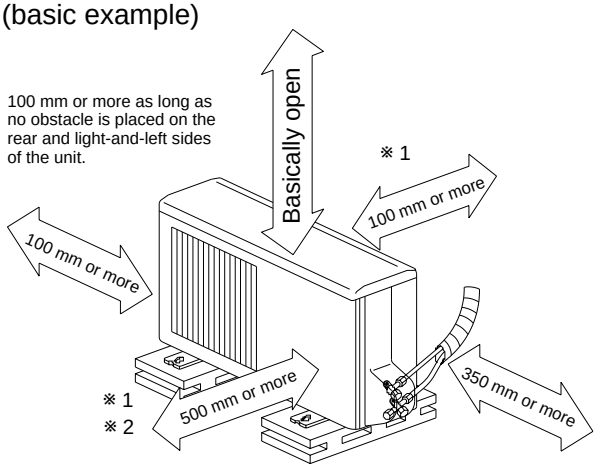

2 sides should be open in the right, left and rear side.

Minimum installation space for outdoor unit

※ 1 In the place where short cycle tends to occur, cooling and heating capacity and power consumption might get lowered 10%. Air outlet guide (optional PAC-SG58SG) will help them improve.
※ 2 If air discharges to the wall, the surface might get stained.

PUHZ-RP60VHA2
PUHZ-RP71VHA2

Unit : mm

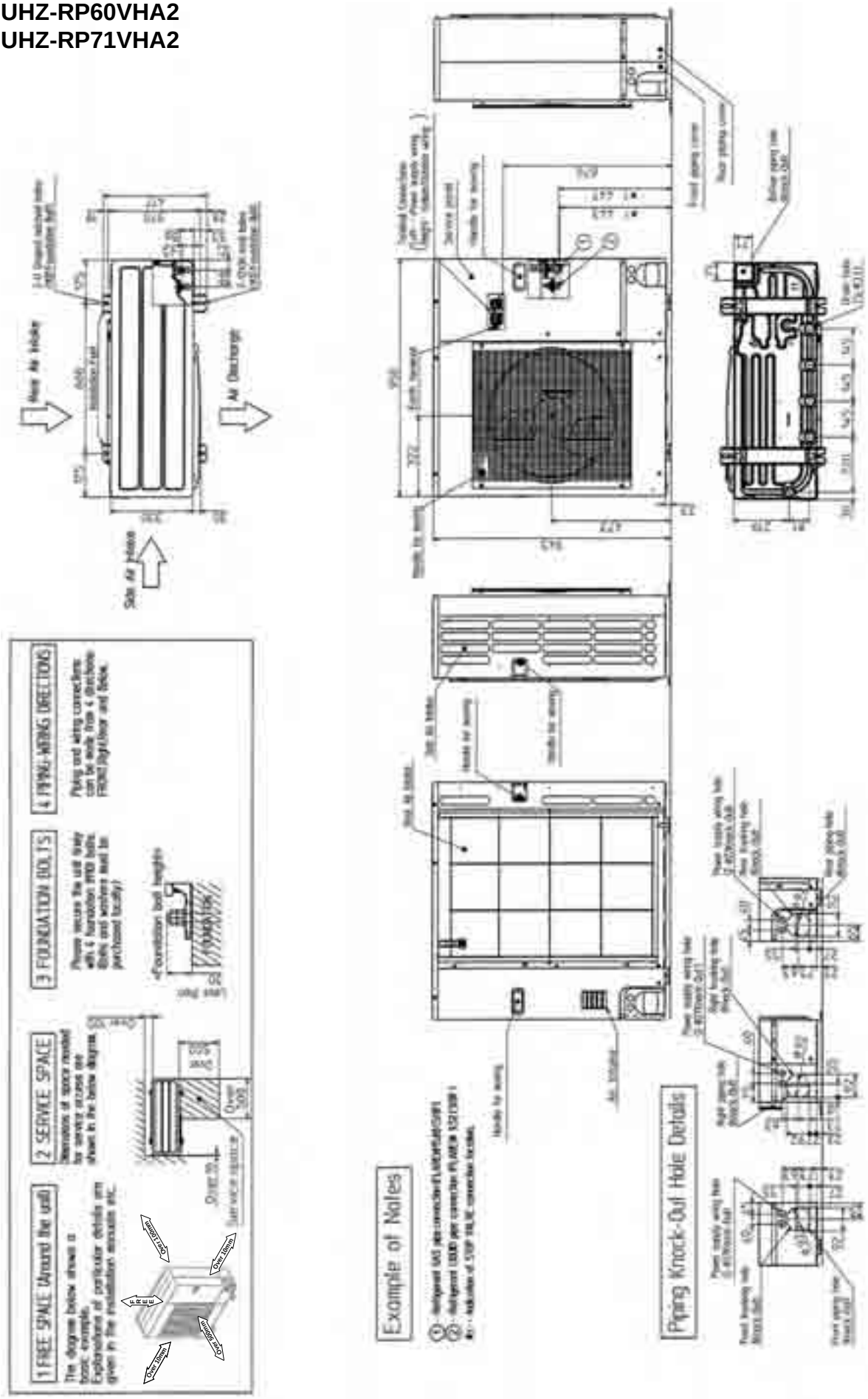

PUHZ-RP100VHA2
PUHZ-RP125VHA2
PUHZ-RP140VHA2
PUHZ-RP100YHA2
PUHZ-RP125YHA2
PUHZ-RP140YHA2

Unit : mm

	A
RP·VHA2	1,076
RP·YHA2	930

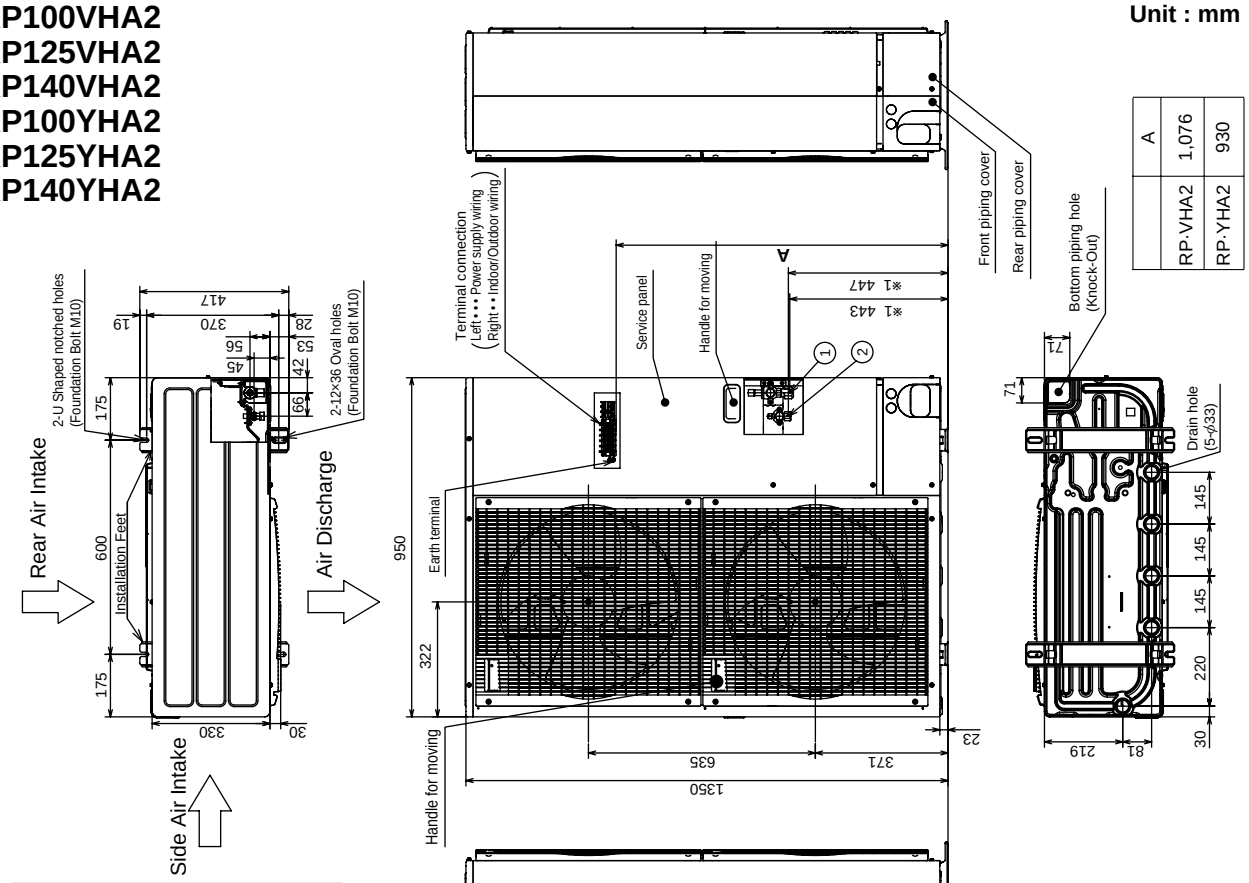

1 FREE SPACE (Around the unit)

The diagram below shows a basic example.
Explantion of particular details are given in the installation manuals etc.

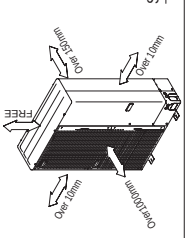

2 SERVICE SPACE

Dimensions of space needed for service access are shown in the below diagram.

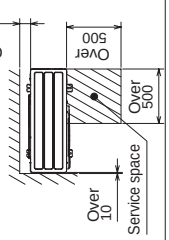

3 FOUNDATION BOLTS

Please secure the unit firmly with 4 foundation (M10) bolts. (Bolts and washers must be purchased locally.)

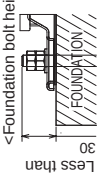

4 PIPING-WIRING DIRECTIONS

Piping and wiring connections can be made from 4 directions: FRONT,Right,Rear and Below.

Example of Notes

①••• Refrigerant GAS pipe connction (FLARE)φ15.88 (5/8F)
②••• Refrigerant LIQUID pipe connection (FLARE)φ9.52 (3/8F)
※1••• Indication of STOP VALVE connection location.

Piping Knock-Out Hole Details

WIRED REMOTE CONTROLLER

Unit : mm

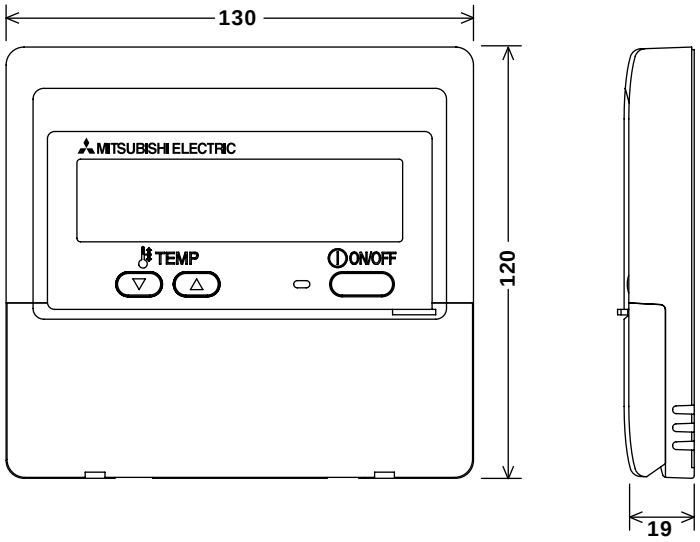

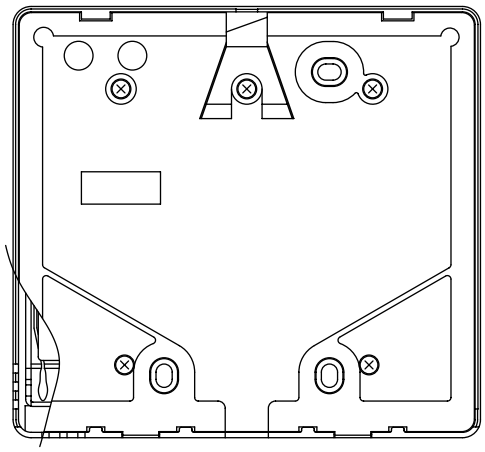

WIRELESS REMOTE CONTROLLER

Unit : mm

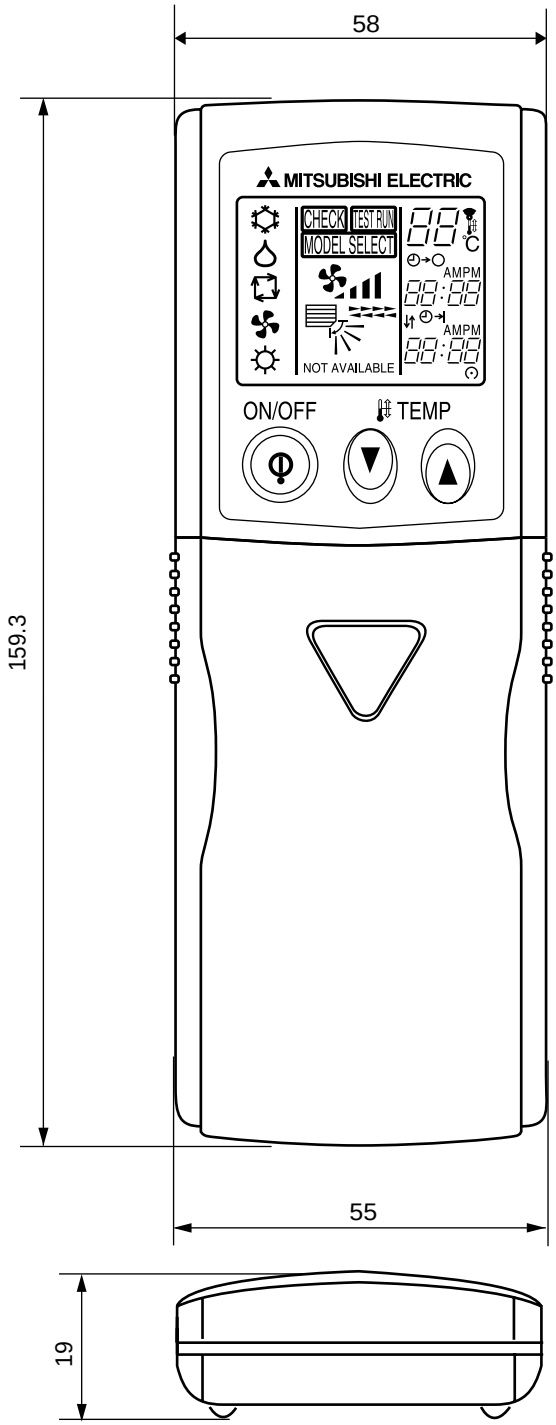

4 WIRING DIAGRAM

PLA-RP35AA PLA-RP50AA PLA-RP60AA PLA-RP71AA

[LEGEND]

SYMBOL		NAME	SYMBOL	NAME	SYMBOL		NAME
P.B		INDOOR POWER BOARD	MF	FAN MOTOR	W.B		WIRELESS REMOTE CONTROLLER BOARD
I.B		INDOOR CONTROLLER BOARD	MV	VANE MOTOR		RU	RECEIVING UNIT
	FUSE	FUSE(T6.3AL250V)	H2	DEW PREVENTION HEATER		BZ	BUZZER
	ZNR	VARISTOR	DP	DRAIN-UP MACHINE		LED1	LED(RUN INDICATOR)
	BCR	FAN CONTROL ELEMENT	DS	DRAIN SENSOR		LED2	LED(HOT ADJUST)
	CN2L	CONNECTOR(LOSSNAY)	TB2	TERMINAL BLOCK (INDOOR UNIT POWER(OPTION))		SW1	SWITCH(HEATING ON/OFF)
	CN32	CONNECTOR(REMOTE SWITCH)				SW2	SWITCH(COOLING ON/OFF)
	CN41	CONNECTOR(HA TERMINAL-A)	TB4	TERMINAL BLOCK (INDOOR/ OUTDOOR CONNECTING LINE)			
	CN51	CONNECTOR(CENTRALLY CONTROL)					
	LED1	POWER SUPPLY(I.B)	TB5, TB6	TERMINAL BLOCK(REMOTE CONTROLLER TRANSMISSION LINE)			
	LED2	POWER SUPPLY(I.B)					
	LED3	TRANSMISSION(INDOOR-OUTDOOR)	TH1	ROOM TEMP.THERMISTOR (0˚C/15kΩ,25˚C/5.4kΩ DETECT)			
	X1	RELAY(DRAIN PUMP)					
	X4	RELAY(FAN MOTOR)	TH2	PIPE TEMP.THERMISTOR/LIQUID (0˚C/15kΩ,25˚C/5.4kΩ DETECT)			
	SW1	SWITCH(MODEL SELECTION)※See table 1					
	SW2	SWITCH(CAPACITY CORD)※See table 2	TH5	COND./EVA. TEMP. THERMISTOR (0˚C/15kΩ,25˚C/5.4kΩ DETECT)			
	SWE	CONNECTOR(EMERGENCY OPERATION)					
C		CAPACITOR(FAN MOTOR)	R.B	WIRED REMOTE CONTROLLER BOARD			

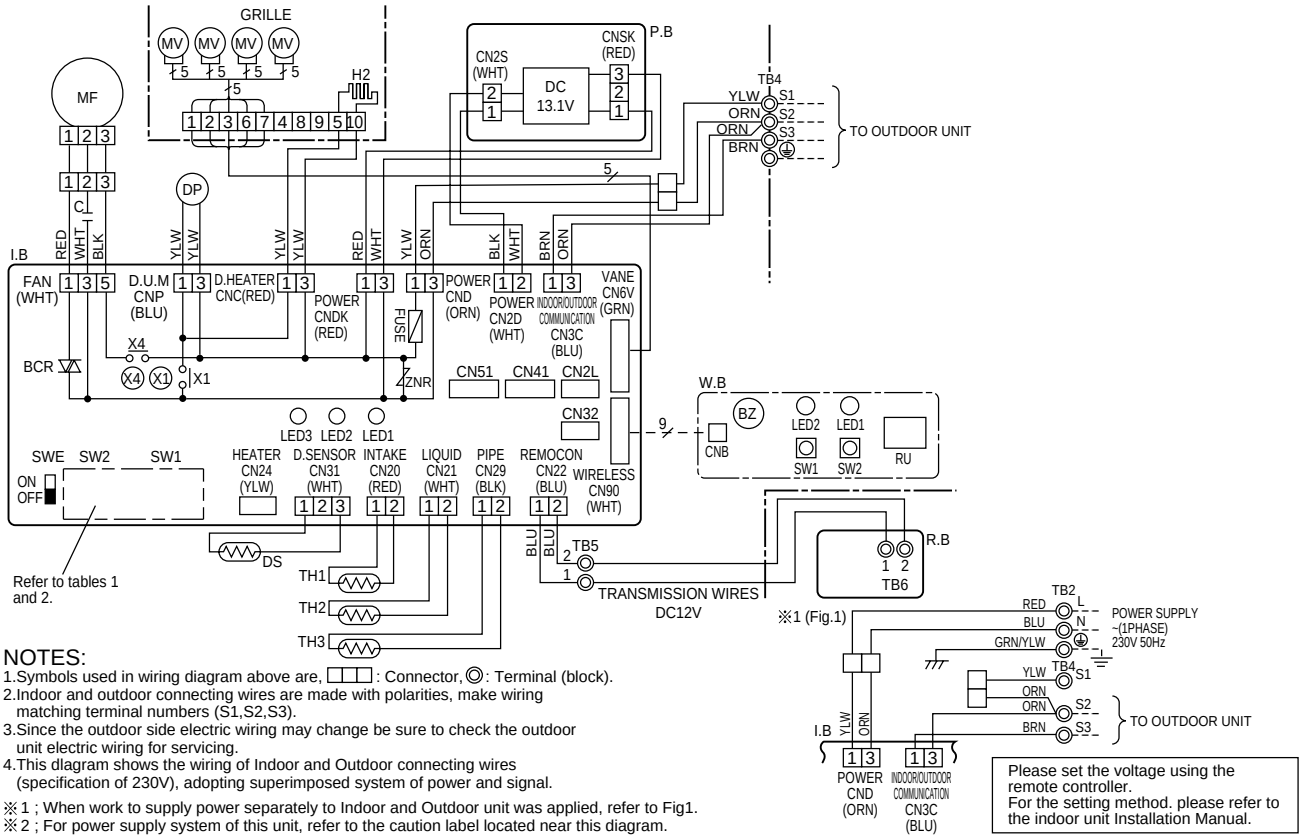

NOTES:

1.Symbols used in wiring diagram above are, ▭▭▭ : Connector, ◎ : Terminal (block).
2.Indoor and outdoor connecting wires are made with polarities, make wiring matching terminal numbers (S1,S2,S3).
3.Since the outdoor side electric wiring may change be sure to check the outdoor unit electric wiring for servicing.
4.This dlagram shows the wiring of Indoor and Outdoor connecting wires (specification of 230V), adopting superimposed system of power and signal.

※1 ; When work to supply power separately to Indoor and Outdoor unit was applied, refer to Fig1.
※2 ; For power supply system of this unit, refer to the caution label located near this diagram.

Table 1

SW1	
MODELS	Service board
PLA-RP. AA	1 2 3 4 5 ON OFF

Table 2

SW2	
MODELS	Service board
PLA-RP35AA	1 2 3 4 5 ON OFF
PLA-RP50AA	1 2 3 4 5 ON OFF
PLA-RP60AA	1 2 3 4 5 ON OFF
PLA-RP71AA	1 2 3 4 5 ON OFF

PLA-RP100AA2 PLA-RP125AA2 PLA-RP140AA2

[LEGEND]

SYMBOL		NAME	SYMBOL	NAME	SYMBOL		NAME
P.B		INDOOR POWER BOARD	MV	VANE MOTOR	W.B		WIRELESS REMOTE CONTROLLER BOARD
	FUSE	FUSE(T5AL250V)	H2	DEW PREVENTION HEATER		RU	RECEIVING UNIT
	ZNR	VARISTOR	DP	DRAIN-UP MACHINE		BZ	BUZZER
	IPM	POWER MODULE	DS	DRAIN SENSOR		LED1	LED(RUN INDICATOR)
I.B		INDOOR CONTROLLER BOARD	TB2	TERMINAL BLOCK (Indoor unit Power (option))		LED2	LED(HOT ADJUST)
	CN2L	CONNECTOR(LOSSNAY)	TB4	TERMINAL BLOCK (INDOOR/OUTDOOR CONNECTING LINE)		SW1	SWITCH(HEATING ON/OFF)
	CN32	CONNECTOR(REMOTE SWITCH)				SW2	SWITCH(COOLING ON/OFF)
	CN41	CONNECTOR(HA TERMINAL-A)	TB5, TB6	TERMINAL BLOCK(REMOTE CONTROLLER TRANSMISSION LINE)			
	CN51	CONNECTOR(CENTRALLY CONTROL)					
	LED1	POWER SUPPLY(I.B)	DCL	REACTOR			
	LED2	POWER SUPPLY(I.B)	TH1	ROOM TEMP.THERMISTOR (0℃/15kΩ,25℃/5.4kΩ DETECT)			
	LED3	TRANSMISSION(INDOOR-OUTDOOR)					
	X1	RELAY(DRAIN PUMP)	TH2	PIPE TEMP.THERMISTOR/LIQUID (0℃/15kΩ,25℃/5.4kΩ DETECT)			
	SW1	SWITCH(MODEL SELECTION)※See table 1					
	SW2	SWITCH(CAPACITY CORD)※See table 2	TH5	COND./EVA. TEMP. THERMISTOR (0℃/15kΩ,25℃/5.4kΩ DETECT)			
	SWE	CONNECTOR(EMERGENCY OPERATION)					
MF		FAN MOTOR	R.B	WIRED REMOTE CONTROLLER BOARD			

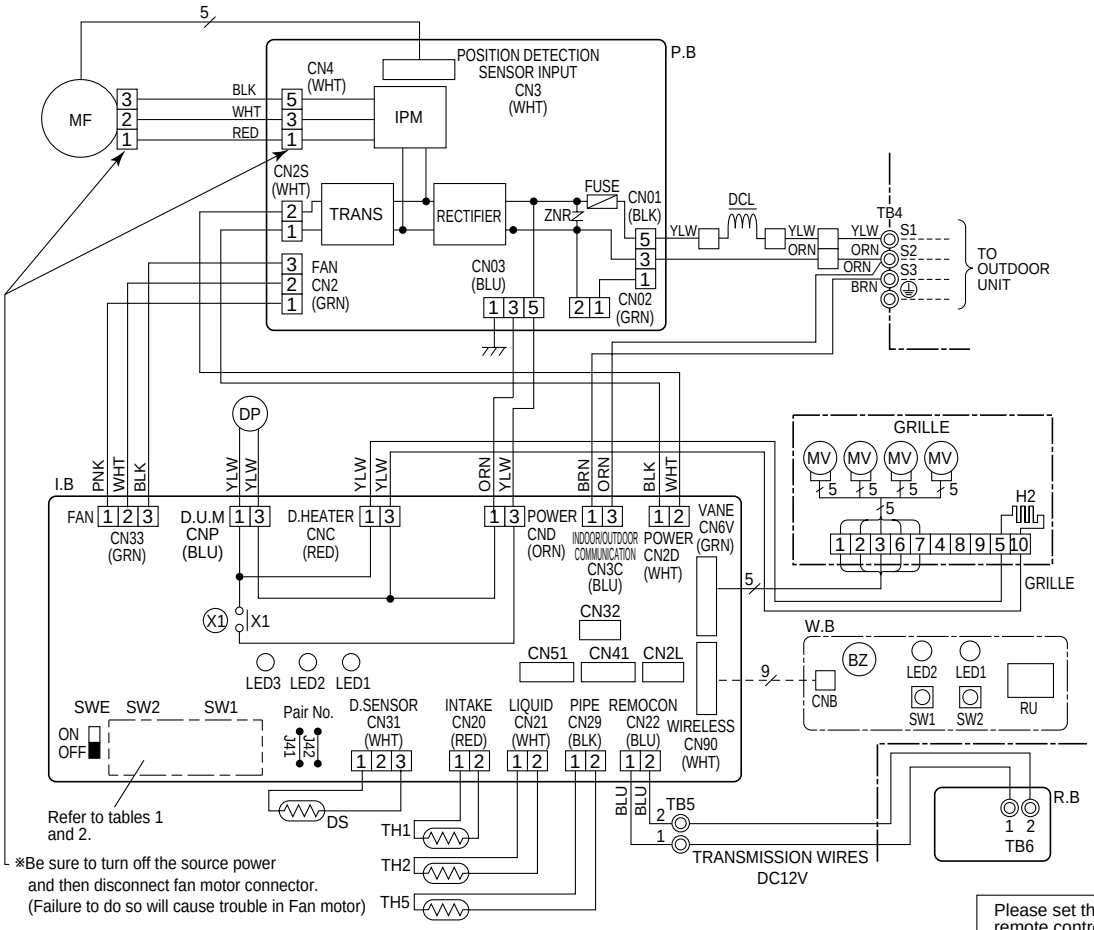

Please set the voltage using the remote controller.
For the setting method. please refer to the indoor unit Installation Manual.

NOTES: 1.Symbols used in wiring diagram above are, ▭▭▭: Connector, ◎: Terminal (block).
2.Indoor and outdoor connecting wires are made with polarities, make wiring matching terminal numbers (S1,S2,S3).
3.Since the outdoor side electric wiring may change be sure to check the outdoor unit electric wiring for servicing.
4.This dlagram shows the wiring of indoor and outdoor connecting wires. (specification of 230V), adopting superimposed system of power and signal.

※1 ; When work to supply power separately to indoor and outdoor unit was applied, refer to Fig1.
※2 ; For power supply system of this unit, refer to the caution label located near this diagram.

※1 (Fig.1)

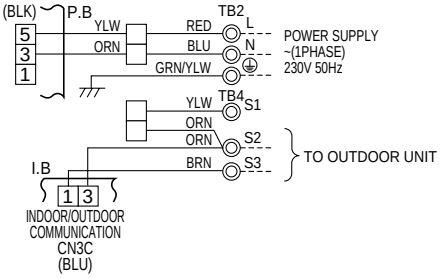

(Table 1) SW1 (MODEL SELECTION)

SW1
Manufacture/Service
1 2 3 4 5 ON OFF

(Table 2) SW2 (CAPACITY CORD)

SW2			
MODELS	Manufacture/Service	MODELS	Manufacture/Service
PLA-RP100AA2	1 2 3 4 5 ON OFF	PLA-RP140AA2	1 2 3 4 5 ON OFF
PLA-RP125AA2	1 2 3 4 5 ON OFF		

PEAD-RP35EA2 PEAD-RP50EA PEAD-RP60EA PEAD-RP71EA PEAD-RP100EA2 PEAD-RP125EA PEAD-RP140EA

SYMBOL	NAME	SYMBOL	NAME	SYMBOL	NAME
I.B.	INDOOR CONTROLLER BOARD	SW2	SWITCH(CAPACITY CORD)	TB4	TERMINAL BLOCK (INDOOR/OUTDOOR CONNECTING LINE)
FUSE	FUSE(T6.3AL250V)	SWE	SWITCH(EMERGENCY OPERATION)		
ZNR	VARISTOR	X1	RELAY(DRAIN PUMP)	TB5	TERMINAL BLOCK(REMOTE CONTROLLER)
CN2L	CONNECTOR(LOSSNAY)	X4	RELAY(FAN MOTOR)	TH1	INTAKE AIR TEMP. THERMISTOR (0℃ /15kΩ,25℃/5.4kΩ DETECT)
CN24	CONNECTOR(HEATER)	X5	RELAY(FAN MOTOR)		
CN32	CONNECTOR(REMOTE SWITCH)	X6	RELAY(FAN MOTOR)	TH2	PIPE TEMP. THERMISTOR/LIQUID (0℃ /15kΩ,25℃/5.4kΩ DETECT)
CN41	CONNECTOR(HA TERMINAL-A)	P.B.	INDOOR POWER BOARD		
CN51	CONNECTOR(CENTRALLY CONTROL)	DRAIN PUMP	(OPTIONAL PARTS)	TH5	COND./EVA. TEMP. THERMISTOR (0℃ /15kΩ,25℃/5.4kΩ DETECT)
CN90	CONNECTOR(WIRELESS)	DP	DRAIN PUMP		
LED1	POWER SUPPLY(I.B.)	DS	DRAIN SENSOR		
LED2	POWER SUPPLY(REMOTE CONTROLLER)	C	CAPACITOR(FAN MOTOR)		
LED3	TRANSMISSION(INDOOR•OUTDOOR)	MF	FAN MOTOR		
SW1	SWITCH(MODEL SELECTION)				

INSIDE SECTION OF CONTROL BOX

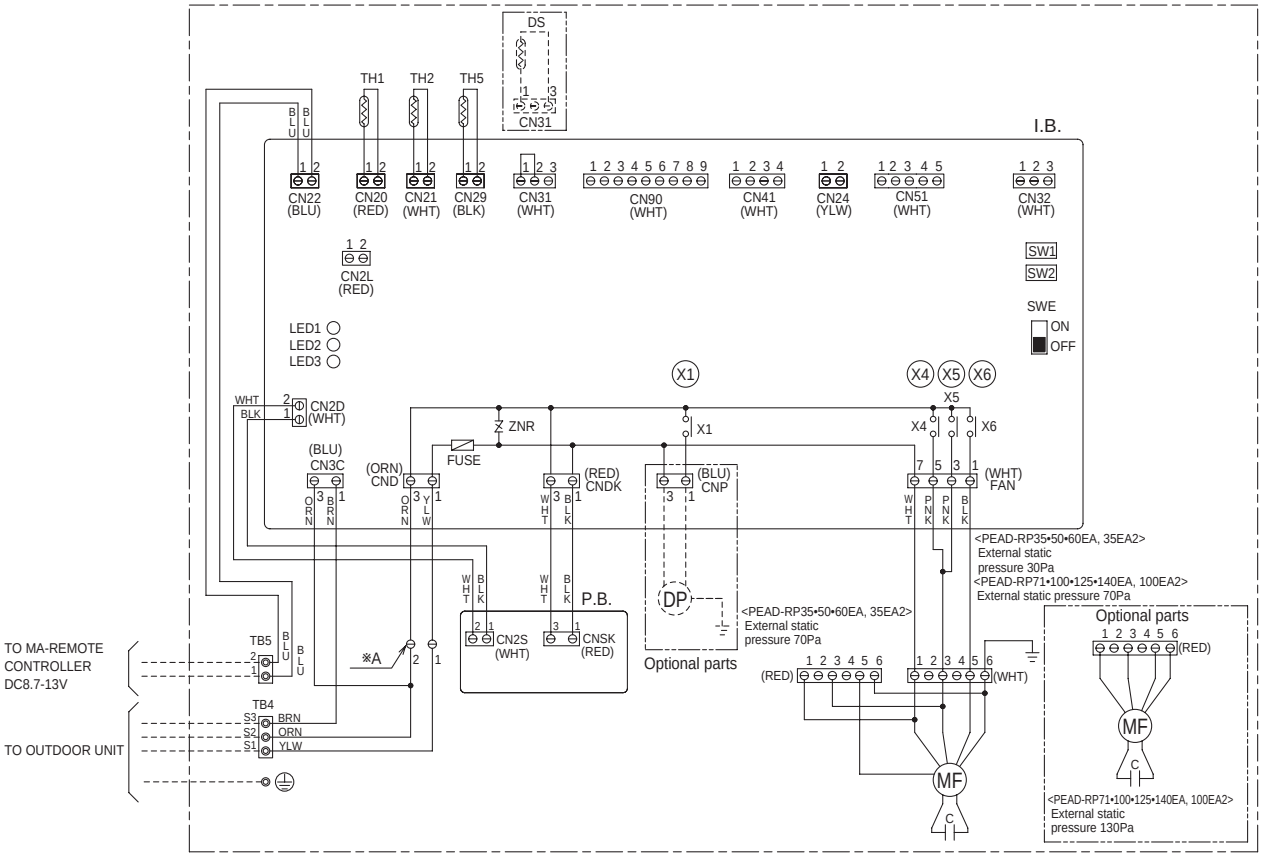

MODELS	SW1 Model selection switch	SW2 Capacity cord switch
35EA(2)		1 2 3 4 5 ON OFF
50EA		1 2 3 4 5 ON OFF
60EA		1 2 3 4 5 ON OFF
71EA	1 2 3 4 5 ON OFF	1 2 3 4 5 ON OFF
100EA(2)		1 2 3 4 5 ON OFF
125EA		1 2 3 4 5 ON OFF
140EA		1 2 3 4 5 ON OFF

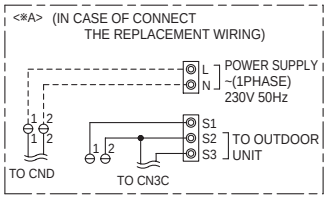

NOTE 1.SINCE THE OUTDOOR SIDE ELECTRIC WIRING MAY CHANGE BE SURE TO CHECK THE OUTDOOR UNIT ELECTRIC WIRING FOR SERVICING.
2.INDOOR AND OUTDOOR CONNECTING WIRES ARE MADE WITH POLARITIES, MAKE WIRING MATCHING TERMINAL NUMBERS(S1,S2,S3).
3.SYMBOLS USED IN WIRING DIAGRAM ABOVE ARE,
⊖⊖⊖: CONNECTOR, ◎◎◎ : TERMINAL.
4.THE WIRING BETWEEN MA-REMOTE CONTROLLER AND TB5 IS INCLUDED IN THE PACKAGE.

PEAD-RP60GA PEAD-RP71GA PEAD-RP100GA

SYMBOL	NAME	SYMBOL	NAME	SYMBOL	NAME
I.B.	INDOOR CONTROLLER BOARD	SW1	SWITCH(MODEL SELECTION)	TB5	TERMINAL BLOCK(REMOTE CONTROLLER)
FUSE	FUSE(T6.3AL250V)	SW2	SWITCH(CAPACITY CORD)	TH1	INTAKE AIR TEMP.THERMISTOR (0℃ /15kΩ,25℃/5.4kΩ DETECT)
ZNR	VARISTOR	SWE	SWITCH(EMERGENCY OPERATION)		
CN2L	CONNECTOR(LOSSNAY)	X1	RELAY(DRAIN PUMP)	TH2	PIPE TEMP. THERMISTOR/LIQUID (0℃ /15kΩ,25℃/5.4kΩ DETECT)
CN24	CONNECTOR(HEATER)	X4	RELAY(FAN MOTOR)		
CN32	CONNECTOR(REMOTE SWITCH)	X5	RELAY(FAN MOTOR)	TH5	COND./EVA. TEMP. THERMISTOR (0℃ /15kΩ,25℃/5.4kΩ DETECT)
CN41	CONNECTOR(HA TERMINAL-A)	X6	RELAY(FAN MOTOR)		
CN51	CONNECTOR(CENTRALLY CONTROL)	P.B.	INDOOR POWER BOARD		
CN90	CONNECTOR(WIRELESS)	C	CAPACITOR(FAN MOTOR)		
LED1	POWER SUPPLY(I.B.)	MF	FAN MOTOR		
LED2	POWER SUPPLY(REMOTE CONTROLLER)	TB4	TERMINAL BLOCK (INDOOR/OUTDOOR CONNECTING LINE)		
LED3	TRANSMISSION(INDOOR•OUTDOOR)				

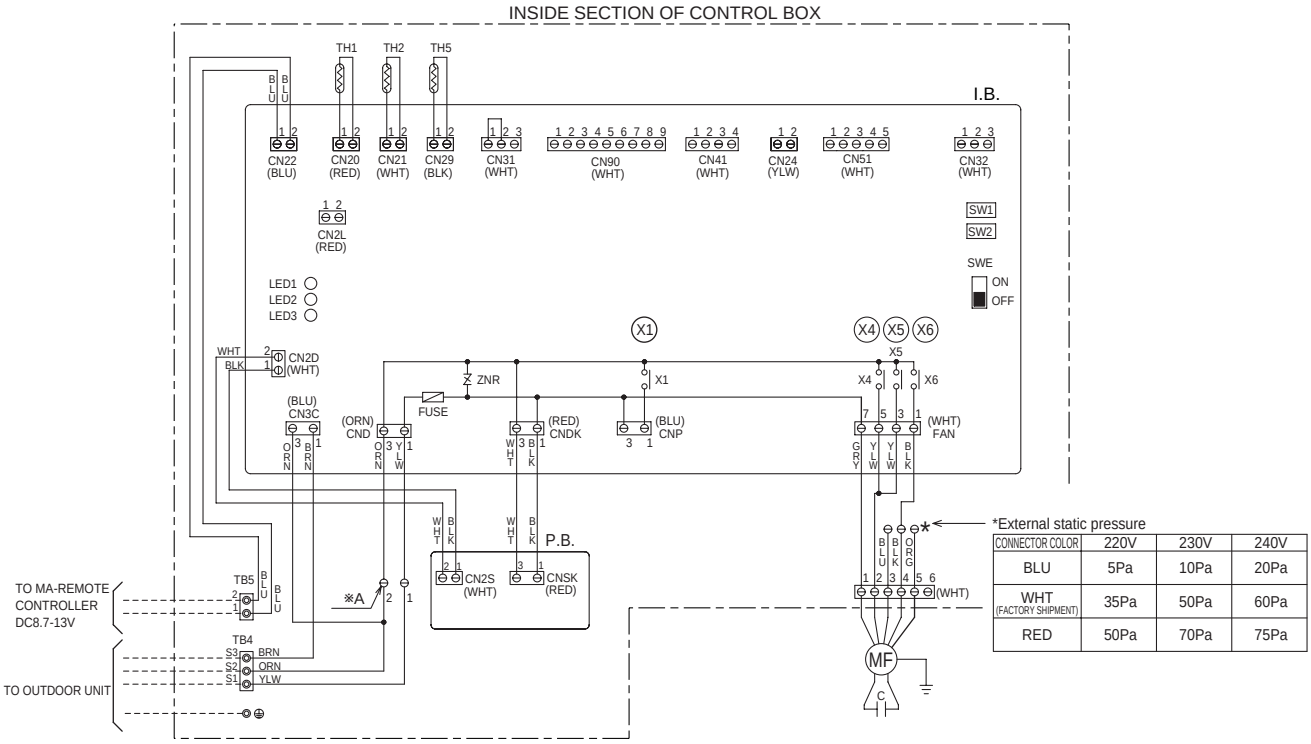

CONNECTOR COLOR	220V	230V	240V
BLU	5Pa	10Pa	20Pa
WHT (FACTORY SHIPMENT)	35Pa	50Pa	60Pa
RED	50Pa	70Pa	75Pa

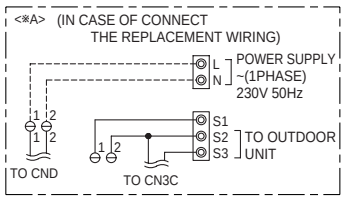

MODELS	SW1 Model selection switch	SW2 Capacity cord switch
60GA		1 2 3 4 5 ON OFF
71GA	1 2 3 4 5 ON OFF	1 2 3 4 5 ON OFF
100GA		1 2 3 4 5 ON OFF

NOTE 1.SINCE THE OUTDOOR SIDE ELECTRIC WIRING MAY CHANGE BE SURE TO CHECK THE OUTDOOR UNIT ELECTRIC WIRING FOR SERVICING.
2.INDOOR AND OUTDOOR CONNECTING WIRES ARE MADE WITH POLARITIES, MAKE WIRING MATCHING TERMINAL NUMBERS(S1,S2,S3).
3.SYMBOLS USED IN WIRING DIAGRAM ABOVE ARE,
⊖⊖⊖: CONNECTOR, ◎◎◎ : TERMINAL.
4.THE WIRING BETWEEN MA-REMOTE CONTROLLER AND TB5 IS INCLUDED IN THE PACKAGE.

PKA-RP35GAL PKA-RP50GAL

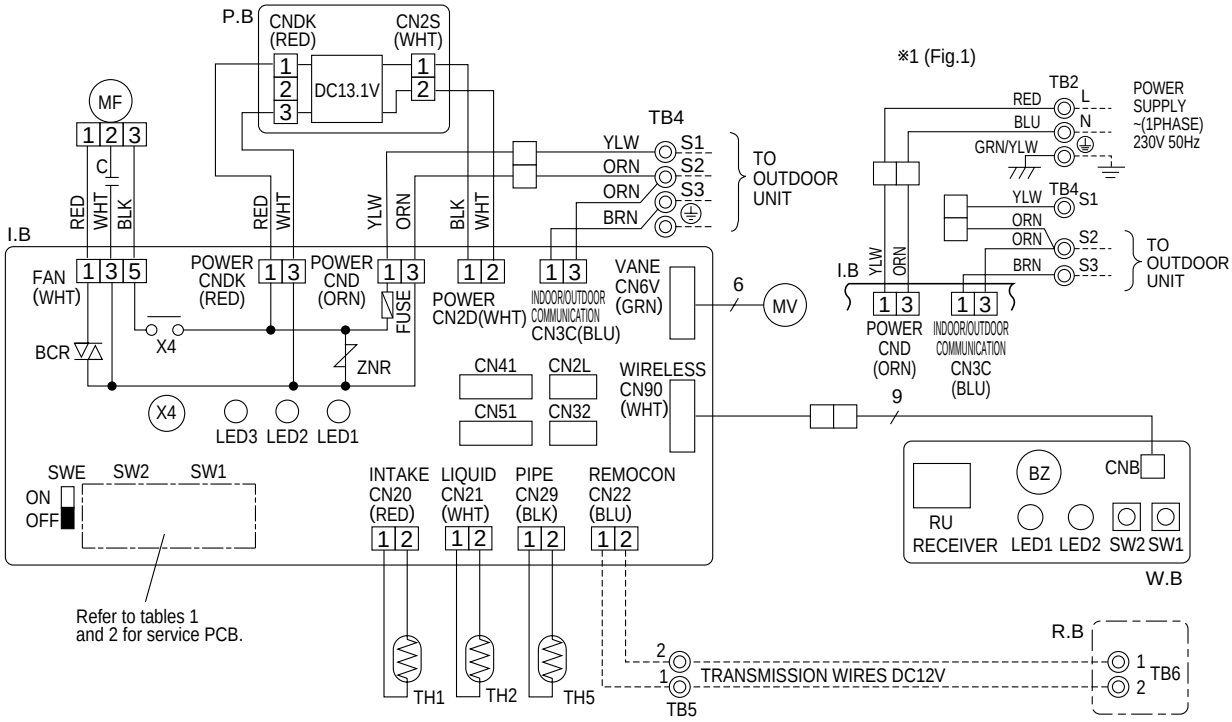

PKH-P35,50GALH models only

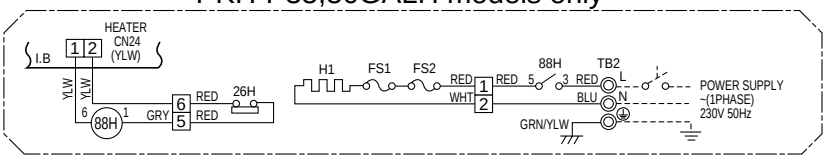

Please set the voltage using the remote controller.
For the setting method,please refer to the indoor unit Installation Manual.

SW1
Service board
1 2 3 4 5 ON OFF

SW2			
MODELS	Service board	MODELS	Service board
PKA-RP35GAL PKH-P35GALH	1 2 3 4 5 ON OFF	PKA-RP50GAL PKH-P50GALH	1 2 3 4 5 ON OFF

SYMBOL		NAME
P.B		INDOOR POWER BOARD
I.B		INDOOR CONTROLLER BOARD
	FUSE	FUSE (T6.3AL250V)
	ZNR	VARISTOR
	CN2L	CONNECTOR <LOSSNAY>
	CN32	CONNECTOR <REMOTE SWITCH>
	CN41	CONNECTOR <HA TERMINAL-A>
	CN51	CONNECTOR <CENTRALLY CONTROL>
	SW1	SWITCH <MODEL SELECTION>※See Table 1.
	SW2	SWITCH <CAPACITY CODE>※See Table 2.
	SWE	SWITCH <EMERGENCY OPERATION>
	X4	RELAY <FAN MOTOR>
	BCR	FAN CONTROL ELEMENT
	LED1	POWER SUPPLY <I.B>
	LED2	POWER SUPPLY <R.B>
	LED3	TRANSMISSION <INDOOR-OUTDOOR>

SYMBOL	NAME
C	CAPACITOR <FAN MOTOR>
MF	FAN MOTOR
MV	VANE MOTOR
TB2	TERMINAL BLOCK (HEATER) ※PKH-P.GALH models only or option for PKA-RP.GAL models.
TB4	TERMINAL BLOCK <INDOOR/ OUTDOOR CONNECTING LINE>
TB5,TB6	TERMINAL BLOCK <REMOTE CONTROLLER TRANSMISSION LINE> <OPTION>
TH1	ROOM TEMP.THERMISTOR <0℃/ 15kΩ, 25℃/ 5.4kΩ DETECT>
TH2	PIPE TEMP.THERMISTOR/ LIQUID <0℃/ 15kΩ, 25℃/ 5.4kΩ DETECT>
TH5	COND./ EVA.TEMP.THERMISTOR <0℃/ 15kΩ, 25℃/ 5.4kΩ DETECT>

SYMBOL		NAME
W.B		WIRELESS REMOTE CONTROLLER BOARD
	RU	RECEIVING UNIT
	BZ	BUZZER
	LED1	LED <RUN INDICATOR>
	LED2	LED <HOT ADJUST>
	SW1	SWITCH (HEATING ON/ OFF>
	SW2	SWITCH (COOLING ON/ OFF>
R.B		WIRED REMOTE CONTROLLER BOARD
HEATER		
	FS1	THERMAL FUSE <104℃ 10A>
	FS2	THERMAL FUSE <84℃ 10A>
	H1	HEATER
	26H	HEATER THERMAL SWITCH
	88H	HEATER CONTACTOR

NOTES:
1. Since the outdoor side electric wiring may change be sure to check the outdoor unit electric wiring for servicing.
2. Indoor and outdoor connecting wires are made with polarities, make wiring matching terminal numbers (S1, S2, S3).
3. Make sure that the main power supply of the booster heater is independent.
4. Symbols used in wiring diagram above are, ☐☐☐: Connector, ◎: Terminal (block).
※1. When work to supply power separately to Indoor and Outdoor unit was applied, refer to Fig 1.
※2. For power supply system of this unit, refer to the caution label located near this diagram.

PKA-RP50FAL2 PKA-RP60FAL PKA-RP71FAL PKA-RP100FAL

SYMBOL		NAME	SYMBOL	NAME	SYMBOL		NAME
P.B		INDOOR POWER BOARD	C	CAPACITOR(FAN MOTOR)	W.B		WIRELESS REMOTE CONTROLLER BOARD
I.B		INDOOR CONTROLLER BOARD	MF	FAN MOTOR		RU	RECEIVING UNIT
	FUSE	FUSE(T6.3AL250V)	MV	VANE MOTOR		BZ	BUZZER
	ZNR	VARISTOR	TB2	TERMINAL BLOCK (HEATER) ※PKH-P.FALH models only or option for PKA-RP.FAL(2) models.		LED1	LED(RUN INDICATOR)
	CN2L	CONNECTOR(LOSSNAY)				LED2	LED(HOT ADJUST)
	CN32	CONNECTOR(REMOTE SWITCH)	TB4	TERMINAL BLOCK(INDOOR/OUTDOOR CONNECTING LINE)		SW1	SWITCH(HEATING ON/OFF)
	CN41	CONNECTOR(HA TERMINAL-A)				SW2	SWITCH(COOLING ON/OFF)
	CN51	CONNECTOR(CENTRALLY CONTROL)	TB5	TERMINAL BLOCK(REMOTE CONTROLLER TRANSMISSION LINE)(OPTION)	R.B		WIREDREMOTE CONTROLLER BOARD(OPTION)
	SW1	SWITCH (MODEL SELECTION) ※See Table 1.				TB6	TERMINAL BLOCK(REMOTE CONTROLLER TRANSMISSION LINE)
	SW2	SWITCH (CAPACITY CODE) ※See Table 2.	TH1	ROOM TEMP.THERMISTOR (0℃/15kΩ, 25℃/5.4kΩ DETECT)	HEATER		
	SWE	SWITCH(EMERGENCY OPERATION)				FS1,2	THERMAL FUSE(117℃ 10A:60,71FALH/ 117℃ 16A:100FALH)
	X4	RELAY(FAN MOTOR)	TH2	PIPE TEMP.THERMISTOR/LIQUID (0℃/15kΩ, 25℃/5.4kΩ DETECT)			
	BCR	FAN CONTROL ELEMENT					
	LED1	POWER SUPPLY(I.B)	TH5	COND./EVA.TEMP.THERMISTOR (0℃/15kΩ, 25℃/5.4kΩ DETECT)		H1	HEATER
	LED2	POWER SUPPLY(R.B)				26H	HEATER THERMAL SWITCH
	LED3	TRANSMISSION(INDOOR-OUTDOOR)				88H	HEATER CONTACTOR

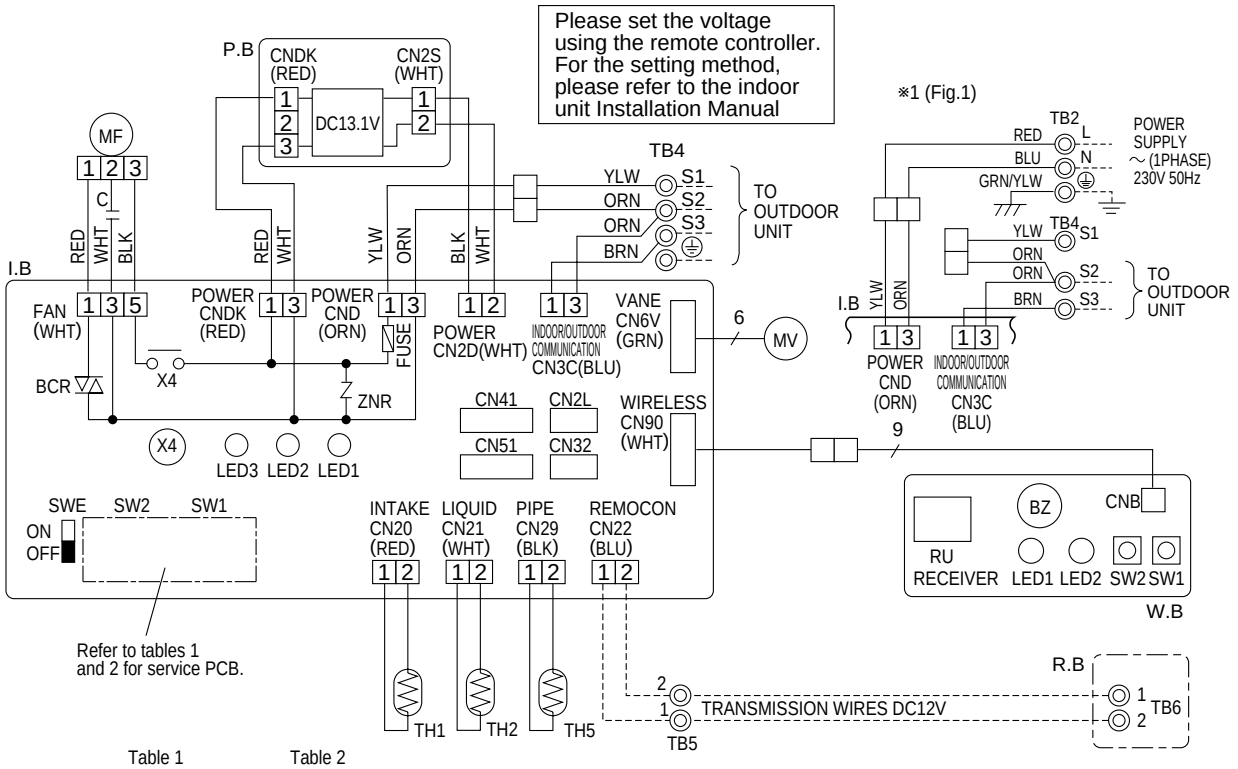

Table 1

SW1
Service board
1 2 3 4 5 ON OFF

Table 2

SW2					
MODELS	Service board	MODELS	Service board	MODELS	Service board
PKA-RP60FAL PKH-P60FALH PKA-RP50FAL2	1 2 3 4 5 ON OFF	PKA-RP71FAL PKH-P71FALH	1 2 3 4 5 ON OFF	PKA-RP100FAL PKH-P100FALH	1 2 3 4 5 ON OFF

PKH-P60～P100FALH models only

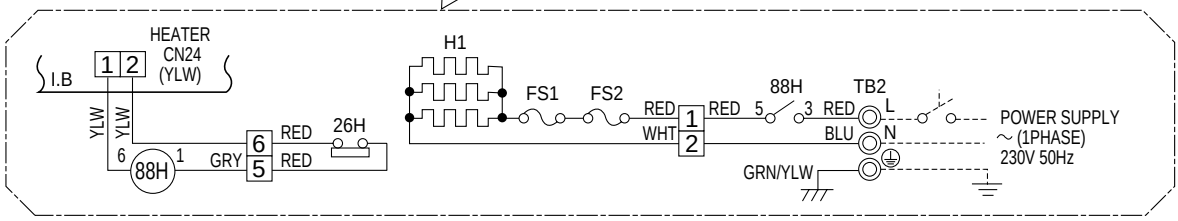

NOTES:
1. Since the outdoor side electric wiring may change be sure to check the outdoor unit electric wiring for servicing.
2. Indoor and outdoor connecting wires are made with polarities, make wiring matching terminal numbers (S1, S2, S3).
3. Make sure that the main power supply of the booster heater is independent.
4. Symbols used in wiring diagram above are, ☐☐☐: Connector, ◎: Terminal (block).
※1. When work to supply power separately to Indoor and Outdoor unit was applied, refer to Fig 1.
※2. For power supply system of this unit, refer to the caution label located near this diagram.

PCA-RP50GA2 PCA-RP50GA PCA-RP60GA PCA-RP71GA PCA-RP100GA PCA-RP125GA PCA-RP140GA

SYMBOL		NAME
P.B		INDOOR POWER BOARD
I.B		INDOOR CONTROLLER BOARD
	FUSE	FUSE (T6.3AL250V)
	ZNR	VARISTOR
	CN2L	CONNECTOR(LOSSNAY)
	CN32	CONNECTOR(REMOTE SWITCH)
	CN41	CONNECTOR(HA TERMINAL-A)
	CN51	CONNECTOR(CENTRALLY CONTROL)
	SW1	SWITCH (MODEL SELECTION) ※See Table 1.
	SW2	SWITCH (CAPACITY CODE) ※See Table 2.
	SWE	SWITCH(EMERGENCY OPERATION)
	X1	RELAY(DRAIN PUMP)
	X4	RELAY(FAN MOTOR)
	BCR	FAN CONTROL ELEMENT
	LED1	POWER SUPPLY(I.B)
	LED2	POWER SUPPLY(R.B)
	LED3	TRANSMISSION(INDOOR-OUTDOOR)
C		CAPACITOR(FAN MOTOR)

SYMBOL	NAME
MF	FAN MOTOR
MV	VANE MOTOR
DP	DRAIN-UP MACHINE (OPTION)
DS	DRAIN SENSOR (OPTION)
TB2	TERMINAL BLOCK (HEATER) ※PCH-P.GAH models only or option for PCA RP.GA(2) models.
TB4	TERMINAL BLOCK(INDOOR/OUTDOOR CONNECTING LINE)
TB5,TB6	TERMINAL BLOCK(REMOTE CONTROLLER TRANSMISSION LINE)
TH1	ROOM TEMP.THERMISTOR (0℃/15kΩ, 25℃/5.4kΩ DETECT)
TH2	PIPE TEMP.THERMISTOR/LIQUID (0℃/15kΩ, 25℃/5.4kΩ DETECT)
TH5	COND./EVA.TEMP.THERMISTOR (0℃/15kΩ, 25℃/5.4kΩ DETECT)
R.B	WIRED REMOTE CONTROLLER BOARD

SYMBOL		NAME
W.B		WIRELESS REMOTE CONTROLLER BOARD(OPTION)
	RU	RECEIVING UNIT
	BZ	BUZZER
	LED1	LED(RUN INDICATOR)
	LED2	LED(HOT ADJUST)
	SW1	SWITCH(HEATING ON/OFF)
	SW2	SWITCH(COOLING ON/OFF)
HEATER		
	FS1,2	THERMAL FUSE(98℃10A:50GAH/117℃16A:100GAH 110℃16A:60,71,125,140GAH)
	H1	HEATER
	26H	HEATER THERMAL SWITCH
	88H	HEATER CONTACTOR

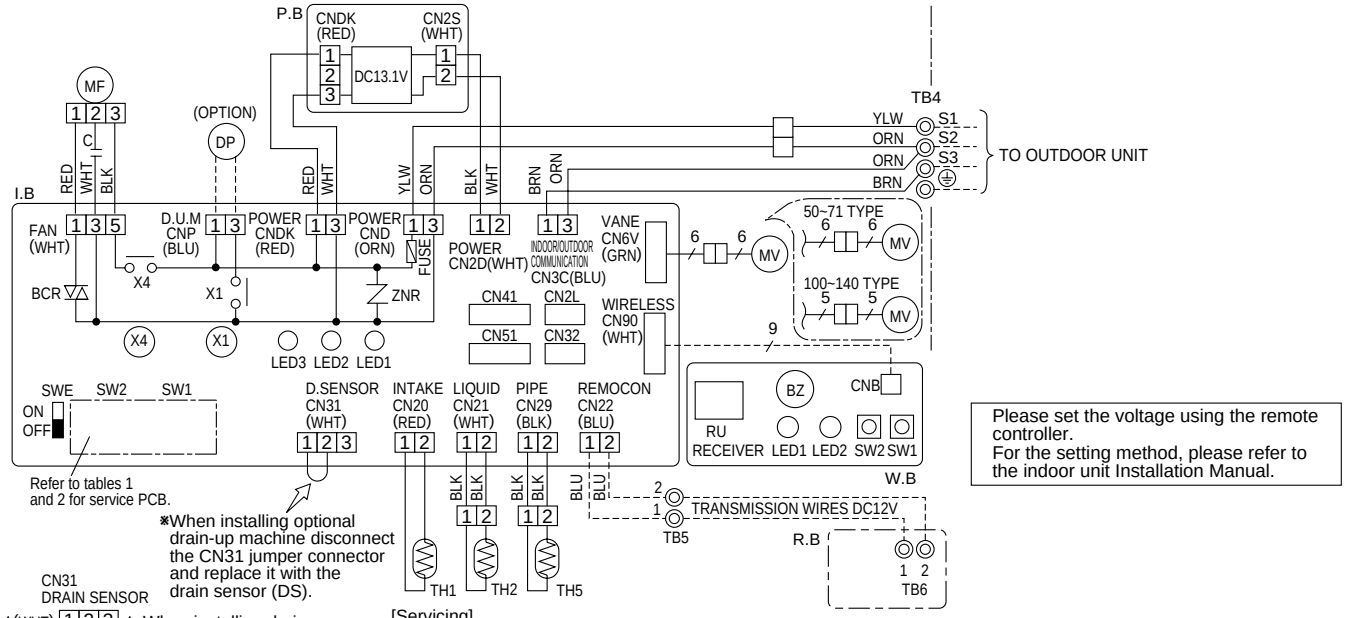

Please set the voltage using the remote controller.
For the setting method, please refer to the indoor unit Installation Manual.

[Servicing]
Fasten terminal of the terminal board "TB4"equips lock system.
To remove the fastened terminal, pull it while pressing the protruding portion (locking lever) of the terminal. The fastened terminal protruding portion should face upward.

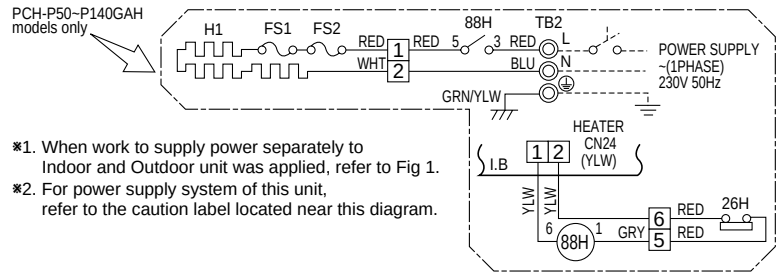

※1. When work to supply power separately to Indoor and Outdoor unit was applied, refer to Fig 1.
※2. For power supply system of this unit, refer to the caution label located near this diagram.

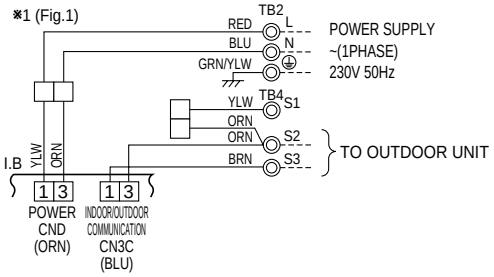

Table 1

SW1	
MODELS	Service board
PCA-RP.GA PCH-P.GAH	1 2 3 4 5 ON OFF

Table 2

SW2			
MODELS	Service board	MODELS	Service board
PCA-RP50GA PCH-P50GAH	1 2 3 4 5 ON OFF	PCA-RP100GA PCH-P100GAH	1 2 3 4 5 ON OFF
PCA-RP50GA2 PCA-RP60GA PCH-P60GAH	1 2 3 4 5 ON OFF	PCA-RP125GA PCH-P125GAH	1 2 3 4 5 ON OFF
PCA-RP71GA PCH-P71GAH	1 2 3 4 5 ON OFF	PCA-RP140GA PCH-P140GAH	1 2 3 4 5 ON OFF

NOTES:
1. Since the outdoor side electric wiring may change be sure to check the outdoor unit electric wiring for servicing.
2. Indoor and outdoor connecting wires are made with polarities, make wiring matching terminal numbers (S1, S2, S3).
3. Make sure that the main power supply of the booster heater is independent.
4. Symbols used in wiring diagram above are, □□□ : Connector, ◎: Terminal (block).

PCA-RP71HA PCA-RP125HA

[LEGEND]

SYMBOL		NAME	SYMBOL	NAME
P. B		INDOOR POWER BOARD	MF1, MF2	FAN MOTOR
I. B		INDOOR CONTROLLER BOARD	C1, C2	CAPACITOR(FAN MOTOR)
	FUSE	FUSE (T6.3AL250V)	H2	DEW PREVENTION HEATER
	ZNR	VARISTOR	TB2	TERMINAL BLOCK(INDOOR UNIT POWER (OPTION))
	CN2L	CONNECTOR (LOSSNAY)		
	CN32	CONNECTOR (REMOTE SWITCH)	TB4	TERMINAL BLOCK(INDOOR/OUTDOOR CONNECTING LINE)
	CN41	CONNECTOR (HA TERMINAL-A)		
	CN51	CONNECTOR (CENTRALLY CONTROLL)	TB5,TB6	TERMINAL BLOCK(REMOTE CONTROLLER TRANSMISSION LINE)
	LED1	POWER SUPPLY (I. B)		
	LED2	POWER SUPPLY (R. B)	TH1	ROOM TEMP.THERMISTOR (0˚C/15kΩ, 25˚C/5.4kΩ DETECT)
	LED3	TRANSMISSION(INDOOR-OUTDOOR)		
	X1	RELAY (DEW PREVENTION HEATER)	TH2	PIPE TEMP.THERMISTOR/LIQUID (0˚C/15kΩ, 25˚C/5.4kΩ DETECT)
	X4	RELAY(FAN MOTOR)		
	X5	RELAY(FAN MOTOR)	TH5	COND./ EVA.TEMP.THERMISTOR (0˚C/15kΩ, 25˚C/5.4kΩ DETECT)
	X6	RELAY(FAN MOTOR)		
	SW1	SWITCH (MODEL SELECTION) ※See Table 1.	R. B	WIRED REMOTE CONTROLLER BOARD
	SW2	SWITCH (CAPACITY CODE)※See Table 2.		
	SWE	SWITCH (EMERGENCY OPERATION)		

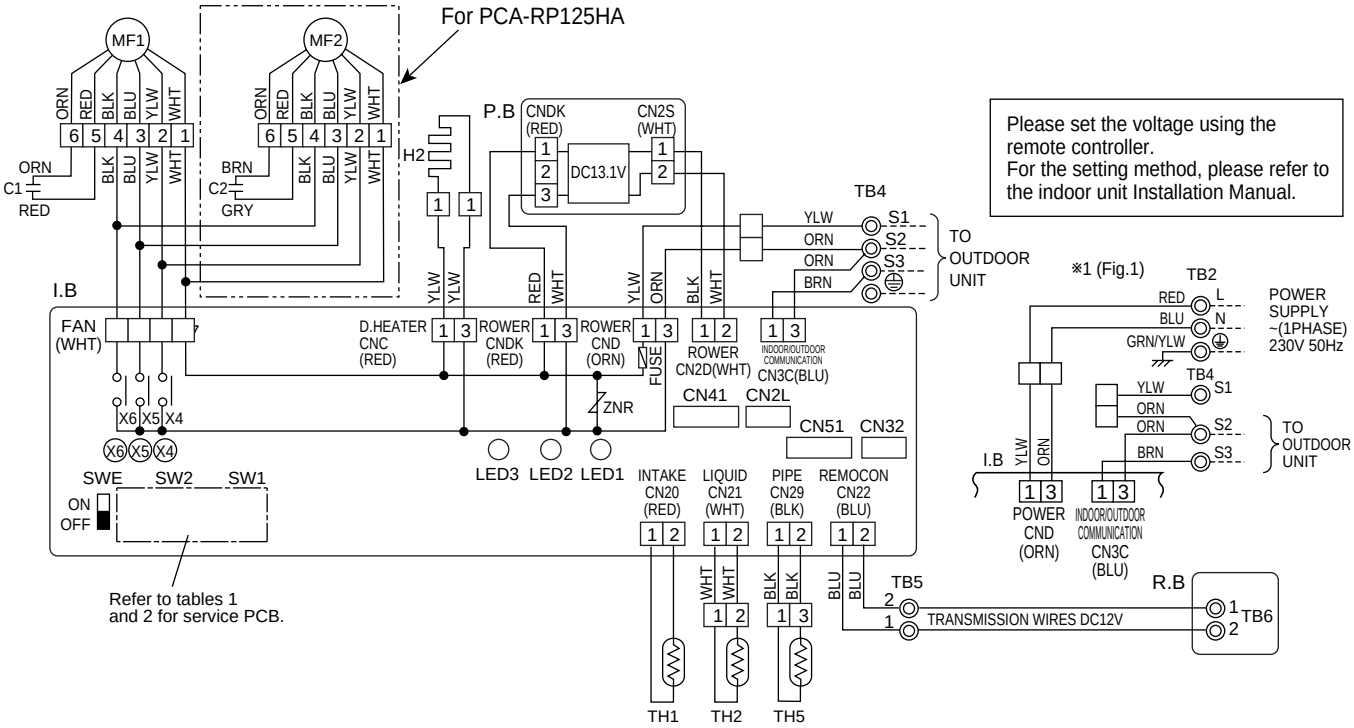

Table 1

SW1
Service board
1 2 3 4 5 ON OFF

Table 2

SW2			
MODELS	Service board	MODELS	Service board
PCA-RP71HA	1 2 3 4 5 ON OFF	PCA-RP125HA	1 2 3 4 5 ON OFF

NOTES:

1.Since the outdoor side electric wiring may change be sure to check the outdoor unit electric wiring for servicing.
2.Indoor and outdoor connecting wires are made with polarities, make wiring matching terminal numbers (S1,S2,S3).
3.Symbols used in wiring diagram above are, ▭▭▭: Connector, ◎: Terminal (block).
※1 ; When work to supply power separately to Indoor and Outdoor unit was applied, refer to Fig1.
※2 ; For power supply system of this unit, refer to the caution label located near this diagram.

PSA-RP71GA PSA-RP100GA PSA-RP125GA PSA-RP140GA

SYMBOL	NAME
P.B	INDOOR POWER BOARD
I.B	INDOOR CONTROLLER BOARD
FUSE	FUSE (T6.3AL250V)
ZNR	VARISTOR
CN2L	CONNECTOR (LOSSNAY)
CN32	CONNECTOR (REMOTE SWITCH)
CN41	CONNECTOR (HA TERMINAL-A)
CN51	CONNECTOR (CENTRALLY CONTROL)
LED1	POWER SUPPLY (I.B)
LED2	POWER SUPPLY (R.B)
LED3	TRANSMISSION (INDOOR-OUTDOOR)

SYMBOL		NAME
I.B	SW1	SWITCH (MODEL SELECTION) ※See Table 1.
	SW2	SWITCH (CAPACITY CODE) ※See Table 2.
	SWE	SWITCH (EMERGENCY OPERATION)
	X2	RELAY (LOUVER)
	X4	RELAY (FAN MOTOR)
	X5	RELAY (FAN MOTOR)
	X6	RELAY (FAN MOTOR)
R.B		WIRED REMOTE CONTROLLER BOARD
	TB6	TERMINAL BLOCK (REMOTE CONTROLLER TRANSMISSION LINE)
HEATER		
	FS1,2	THERMAL FUSE (110˚C16A)
	H	HEATER
	26H	HEATER THERMAL SWITCH
	88H	HEATER CONTACTOR

SYMBOL	NAME
C	CAPACITOR (FAN MOTOR)
MF	FAN MOTOR
ML	LOUVER MOTOR
TB2	TERMINAL BLOCK (HEATER) ※PSH-P.GAH models only or option for PSA-RP.GA models.
TB4	TERMINAL BLOCK (INDOOR/OUTDOOR CONNECTING LINE)
TH1	ROOM TEMP.THERMISTOR (0˚C/15kΩ, 25˚C/5.4kΩ DETECT)
TH2	PIPE TEMP.THERMISTOR/LIQUID (0˚C/15kΩ, 25˚C/5.4kΩ DETECT)
TH5	COND./EVA.TEMP.THERMISTOR (0˚C/15kΩ, 25˚C/5.4kΩ DETECT)

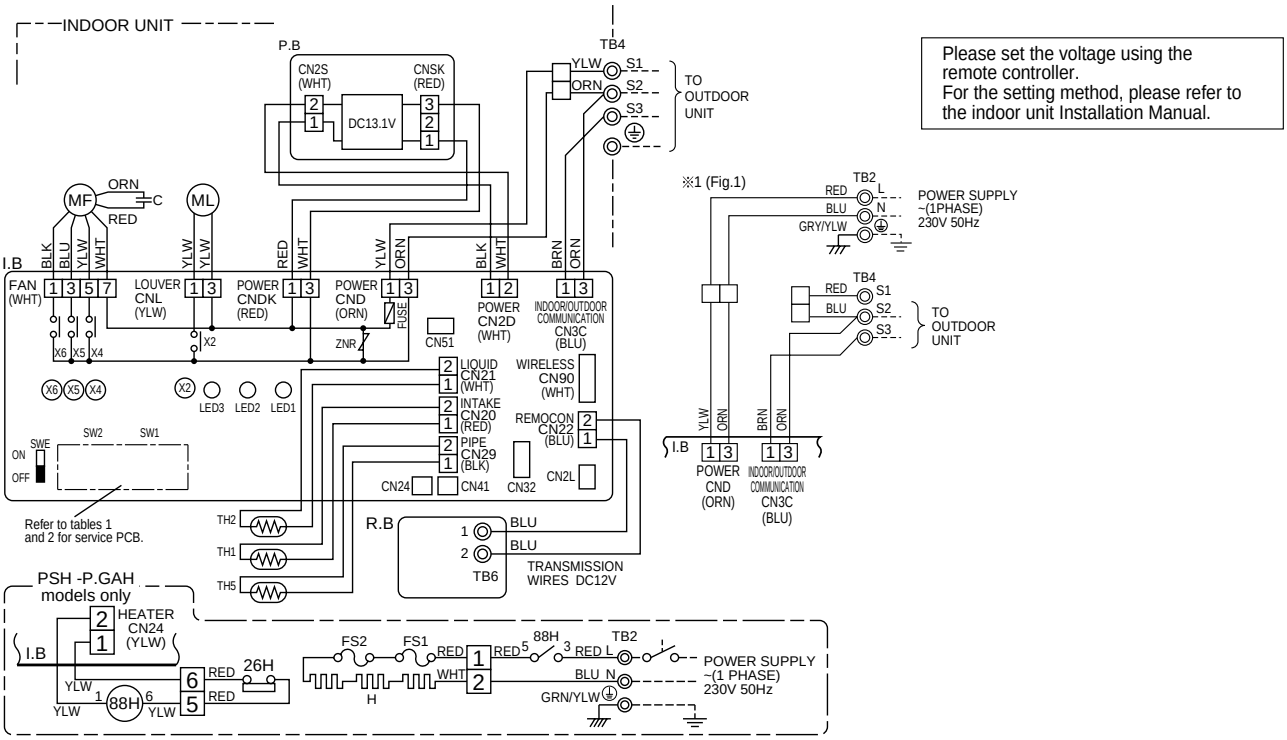

Table 1

SW2	
MODELS	Service board
PSA-RP.GA PSH-P.GAH	1 2 3 4 5 ON OFF

Table 2

SW2	
MODELS	Service board
PSA-RP71GA PSH-P71GAH	1 2 3 4 5 ON OFF
PSA-RP100GA PSH-P100GAH	1 2 3 4 5 ON OFF
PSA-RP125GA PSH-P125GAH	1 2 3 4 5 ON OFF
PSA-RP140GA PSH-P140GAH	1 2 3 4 5 ON OFF

※ 1 ; When work to supply power separately to Indoor and Outdoor unit was applied, refer to Fig1.
※ 2 ; For power supply system of this unit, refer to the caution label located near this diagram.

[NOTES]
1.Symbols used in wiring diagram above are, ☐☐☐ : Connector, ◎: Terminal (block).
2.Indoor and outdoor connecting wires are made with polarities, make wiring matching terminal numbers (S1,S2,S3).
3.Since the outdoor side electric wiring may change be sure to check the outdoor unit electric wiring for servicing.
4.This diagram shows the wiring of Indoor and Outdoor connecting wires (specification of 230V), adopting superimposed system of power and signal.

PUHZ-RP35VHA2 PUHZ-RP50VHA2 PUHZ-RP60VHA2 PUHZ-RP71VHA2

Symbols used in wiring diagram above are, ☐☐☐ :Connector, ◎ :Terminal(block)

SYMBOL	NAME
TB1	Terminal Block<Power Supply, Indoor/Outdoor>
MC	Motor for Compressor
MF1	Fan Motors
21S4	Solenoid Valve (Four-Way Valve)
63H	High Pressure Switch
SV	Solenoid Valve (Bypass Valve)
TH3, TH33	Thermistor<Outdoor Pipe>
TH4	Thermistor<Discharge>
TH6	Thermistor<Outdoor 2-Phase Pipe>
TH7	Thermistor<Outdoor>
TH8	Thermistor<Radiator Panel>
LEV(A),LEV(B)	Electronic Expansion Valve
ACL	Reactor
P.B.	Power Circuit Board
R/S	Connection Terminal<L/N-Phase>
U/V/W	Connection Terminal<U/V/W-Phase>
IPM	Inverter
CB1~CB3	Main Smoothing Capacitor

SYMBOL	NAME
N.F.	Noise Filter Circuit Board
LI/LO	Connection Terminal<L-Phase>
NI/NO	Connection Terminal<N-Phase>
E	Connection Terminal<Ground>
52C	52C Relay
C.B.	Controller Circuit Board
SW1	Switch<Forced Defrost, Defect History Record Reset, Refrigerant Address>
SW4	Switch<Test Operation>
SW5	Switch<Function Switch>
SW6	Switch<Model Select>
SW7	Switch<Function Setup>
SW8	Switch
SW9	Switch
SW10	Switch<Model Select>
LED1,LED2	Light Emitting Diodes <Operation Inspection Indicators>
F1~4	Fuse<T6.3AL250V>

SYMBOL	NAME
SWP	Switch<Pump Down>
CN31	Connector<Emergency Operation>
SS	Connector<Connection for Option>
CNM	Connector<A-Control Service Inspection Kit>
CNMNT	Connector <Connected to Optional M-NET Adapter Board>
CNVMNT	Connector <Connected to Optional M-NET Adapter Board>
CNDM	Connector < Connected for Option (Contact Input)>
X51,X52,X55	Reray

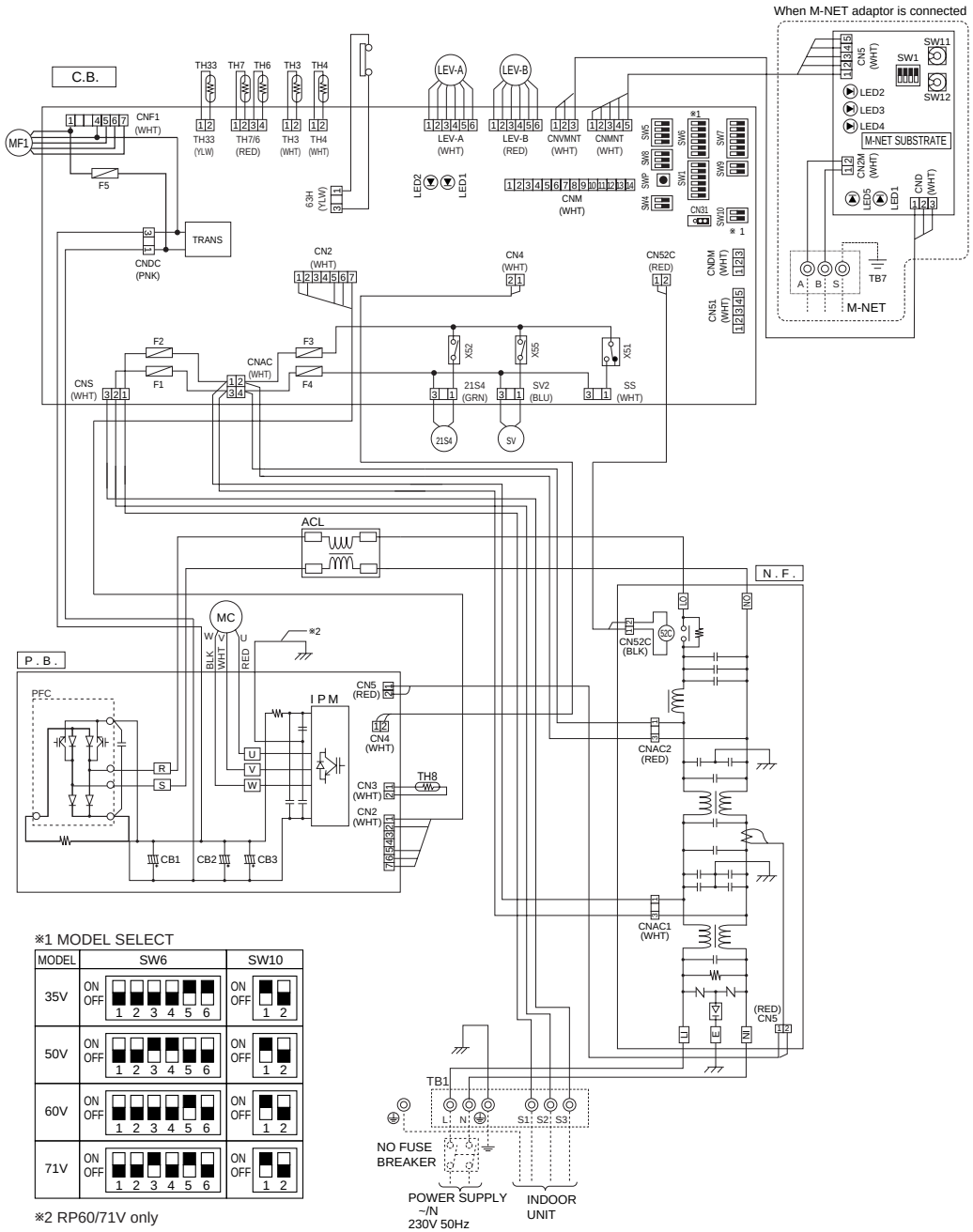

※1 MODEL SELECT

MODEL	SW6	SW10
35V	ON OFF 1 2 3 4 5 6	ON OFF 1 2
50V	ON OFF 1 2 3 4 5 6	ON OFF 1 2
60V	ON OFF 1 2 3 4 5 6	ON OFF 1 2
71V	ON OFF 1 2 3 4 5 6	ON OFF 1 2

※2 RP60/71V only

M-NET ADAPTER

SYMBOL	NAME	SYMBOL	NAME
TB7	Terminal Block<M-net connection>	SW12	Switch<Address setting : 2nd digit>
CN5	Connector<Transmission>	LED1	LED<Power Supply : DC5V>
CND	Connector<Power Supply>	LED2	LED<Connection to Outdoor Unit>
CN2M	Connector<M-NET communication>	LED3	LED<Transmission : Sending>
SW1	Switch<Status of communication>	LED4	LED<Transmission : Recelving>
SW11	Switch<Address setting : 1st digit>	LED5	LED<Power Supply : DC12V>

PUHZ-RP100VHA2 PUHZ-RP125VHA2 PUHZ-RP140VHA2

Symbols used in wiring diagram above are, ☐☐☐:Connector,◎:Terminal(block)

SYMBOL	NAME
TB1	Terminal Block<Power Supply, Indoor/Outdoor >
MC	Motor for Compressor
MF1,MF2	Fan Motors
21S4	Solenoid Valve (Four-Way Valve)
SV	Solenoid Valve (Bypass Valve)
63H	High Pressure Switch
TH3	Thermistor<Outdoor Pipe>
TH4	Thermistor<Discharge>
TH6	Thermistor<Outdoor 2-Phase Pipe>
TH7	Thermistor<Outdoor>
TH8	Thermistor<Heat Sink>
TH33	Thermistor<Outdoor Pipe>
LEV-A,B	Electronic Expansion Valve
DCL	Reactor
52C	52C Relay
RS	Rush Current Protect Resistor
ACTM	Active Filter Module
CB	Main Smoothing Capacitor

SYMBOL	NAME
P.B.	Power Circuit Board
TABU/V/W	Connection Terminal<U/V/W-Phase>
TABS/T	Connection Terminal<L/N-Phase>
TABP1/P2/P	Connection Terminal<DC Voltage>
TABN1/N2/N	Connection Terminal<DC Voltage>
DS2,3	Diode Bridge
IPM	Power Module
N.F.	Noise Filter Circuit Board
LI/LO	Connection Lead<L-Phase>
NI/NO	Connection Lead<N-Phase>
EI	Connection Terminal<Ground>
C.B.	Controller Circuit Board
F1~4	Fuse<T6.3AL250V>
SW1	Switch<Forced Defrost, Defect History Record Reset, Refrigerant Address>
SW4	Switch<Test Operation>
SW5	Switch<Function Switch>
SW6	Switch<Model Select>

SYMBOL	NAME
SW7	Switch<Function Setup>
SW8	Switch
SW9	Switch
SW10	Switch<Model Select>
SWP	Switch<Pump Down>
CN31	Connector<Emergency Operation>
LED1,LED2	Light Emitting Diodes <Operation Inspection Indicators>
SS	Connector<Connection for Option>
CNM	Connector<A-Control Service Inspection Kit>
CNMNT	Connector<Connected to Optional M-NET Adapter Board>
CNVMNT	Connector<Connected to Optional M-NET Adapter Board>
CNDM	Connector< Connected for Option (Contact Input)>

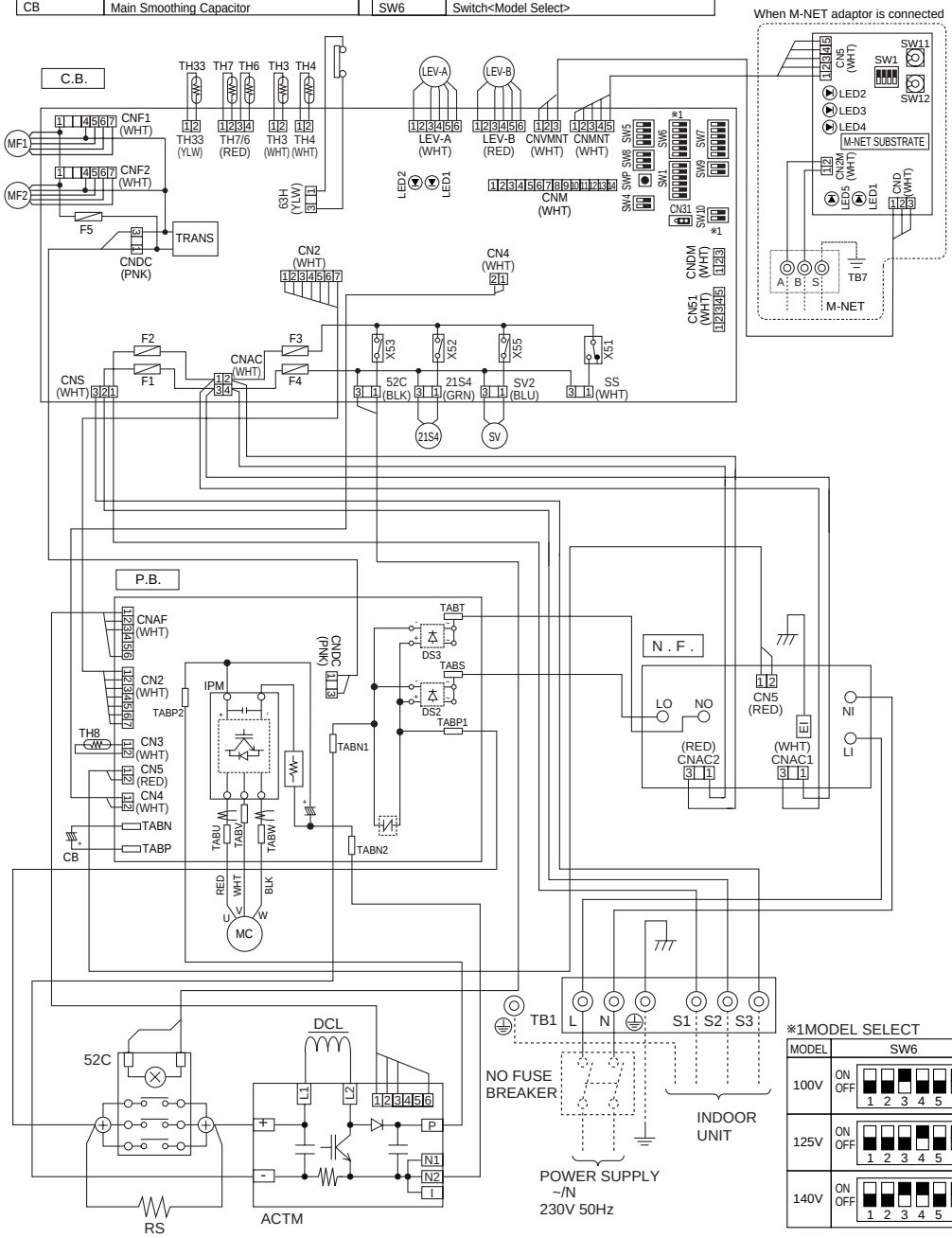

MODEL	SW6	SW10
100V	ON OFF 1 2 3 4 5 6	ON OFF 1 2
125V	ON OFF 1 2 3 4 5 6	ON OFF 1 2
140V	ON OFF 1 2 3 4 5 6	ON OFF 1 2

M-NET ADAPTER

SYMBOL	NAME		
TB7	Terminal Block<M-net connection>	LED1	LED<Power Supply : DC5V>
CN5	Connector<Transmission>	LED2	LED<Connection to Outdoor Unit>
CND	Connector<Power Supply>	LED3	LED<Transmission : Sending>
CN2M	Connector<M-NET communication>	LED4	LED<Transmission : Receiving>
SW1	Switch<Status of communication>	LED5	LED<Power Supply : DC12V>
SW11	Switch<Address setting : 1st digit>		
SW12	Switch<Address setting : 2nd digit>		

PUHZ-RP100YHA2 PUHZ-RP125YHA2 PUHZ-RP140YHA2

SYMBOL	NAME	SYMBOL	NAME	SYMBOL	NAME
TB1	Terminal Block(Power Supply)	N.F.	Noise Filter Circuit Board	CN31	Connector(Emergency Operation)
TB2	Terminal Block(Indoor/Outdoor)	LI1/LI2/LI3/NI	Connection Terminal(L1/L2/L3/N-Power Supply)	21S4	Connector(Four-Way Valve)
MC	Motor for Compressor	LO1/LO2/LO3/NO	Connection Terminal(L1/L2/L3/N-Power Supply)	SV2	Connector(Bypass Valve)
MF1,MF2	Fan Motor	GD1	Connection Terminal(Ground)	SS	Connector Connection for Option)
21S4	Solenoid Valve (Four-Way Valve)	CONV.B	Converter Circuit Board	LEV-A/LEV-B	Connector(LEV)
SV	Solenoid Valve (Bypass Valve)	L1-A1/IN	Connection Terminal(L1-Power Supply)	63H	Connector(High Pressure Switch)
63H	High Pressure Switch	L1-A2/OU	Connection Terminal(L1-Power Supply)	TH3	Connector(Thermistor)
TH3	Thermistor(Outdoor Pipe)	L2-A2/OU	Connection Terminal(L2-Power Supply)	TH4	Connector(Thermistor)
TH4	Thermistor(Discharge)	L3-A2/OU	Connection Terminal(L3-Power Supply)	TH7/6	Connector(Thermistor)
TH6	Thermistor(Outdoor 2-Phase Pipe)	N-IN	Connection Terminal	TH33	Connector(Thermistor)
TH7	Thermistor(Outdoor)	CK-OU	Connection Terminal	CNF1/CNF2	Connector(Fan Motor Operation)
TH33	Thermistor(Outdoor Pipe)	C.B.	Controller Circuit Board	LED1/LED2	LED(Operatiion Inspection Indicators)
LEV	Linear Expansion Valve	F1,F2	FUSE(T6.3AL250V)	CNM	Connector(A-Control Service Inspection Kit)
ACL1~ACL4	Reactor	F3,F4	FUSE(T6.3AL250V)	CNVMNT	Connector(Connect to Optional M-NET Adapter Board)
CB1,CB2	Main Smoothing Capacitor	SW1	Switch(Forced Defrost, Defect History Record Reset, Refrigerant Adress)	CNMNT	Connector(Connect to Optional M-NET Adapter Board)
CK	Capacitor	SW4	Switch(Test Operation)	CN3S	Connector(Connection for Option)
RS	Rush Current Protect Resistor	SW5	Switch(Function Switch)	CNDM	Connector(Connection for Option)
P.B.	Power Circuit Board	SW6	Switch(Model Select)	CN51	Connector(Connection for Option)
TB-U/V/W	Connection Terminal(U/V/W-Phase)	SW7	Switch(Function Switch)		
TB-L1/L2/L3	Connection Terminal(L1/L2/L3-Power Supply)	SW8	Switch(Function Switch)		
TB-P2	Connection Terminal	SW9	Switch(Function Switch)		
TB-C1	Connection Terminal	SW10	Switch(Model Select)		
TB-N1	Connection Terminal	SWP	Switch(Pump Down)		
CT1, CT2	Current Trans				

M-NET ADAPTER

TB7	Terminal Block(M-NET connection)	SW12	Switch(Address setting. 2nd digit)
CN5	Connector(Transmission)	LED1	LED(Power Supply: DC5V)
CND	Connector(Power Supply)	LED2	LED(Connection to Outdoor Unit)
CN2M	Connector(M-NET communication)	LED3	LED(Transmission: Sending)
SW1	Switch(Status of communication)	LED4	LED(Transmission: Receiving)
SW11	Switch(Address setting: 1st digit)	LED5	LED(Power Supply: DC12V)

Symbols used in wiring diagram above are, ☐☐☐: Connector, ◎ : Terminal(block)

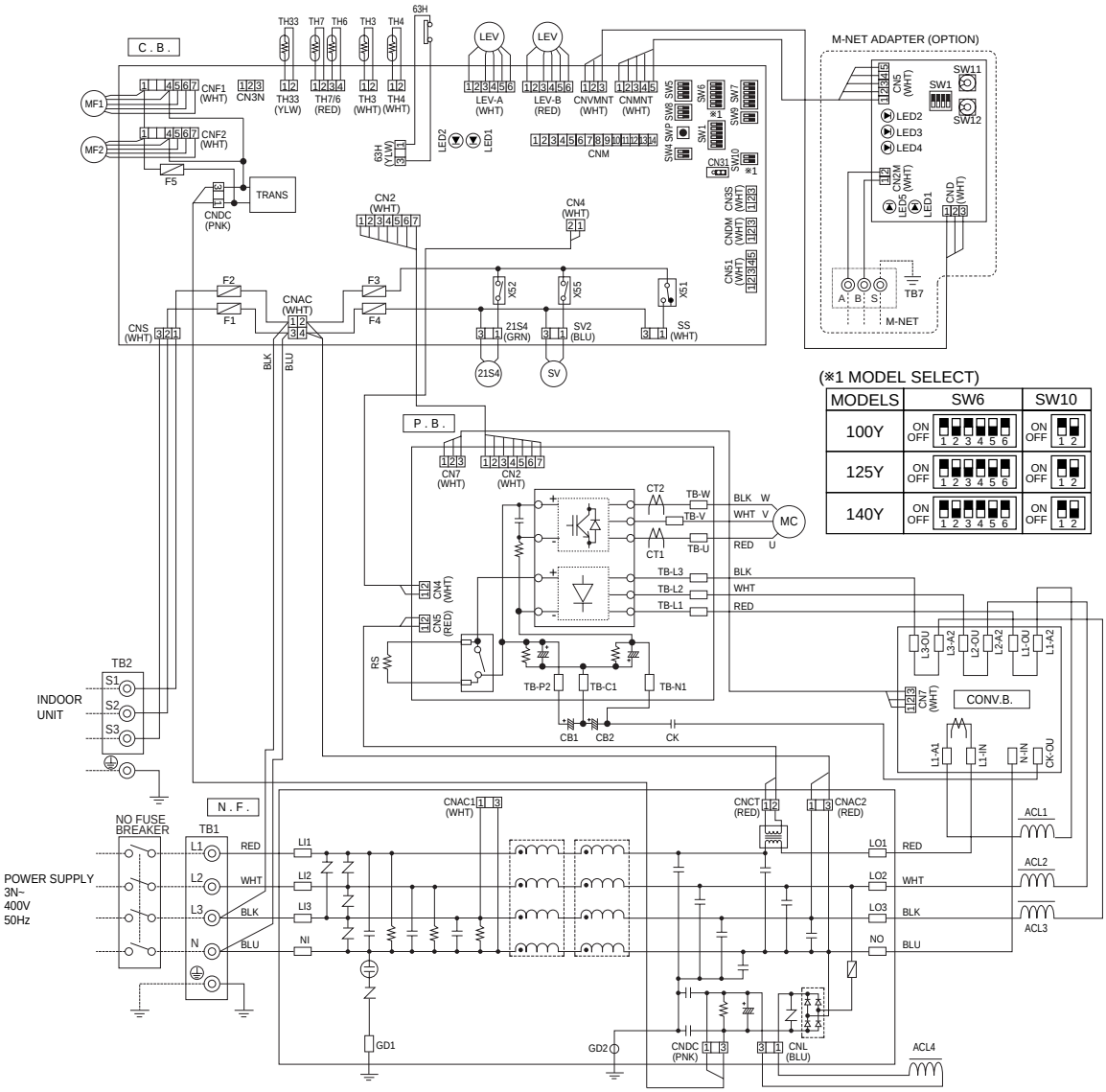

5 REFRIGERANT SYSTEM DIAGRAM

5-1. INDOOR UNIT

PLA-RP·AA(2) **PCA-RP·GA(2)** **PCA-RP·HA**
PKA-RP·GAL **PKA-RP·FAL(2)** **PSA-RP·GA**
PEAD-RP·EA(2) **PEAD-RP·GA**

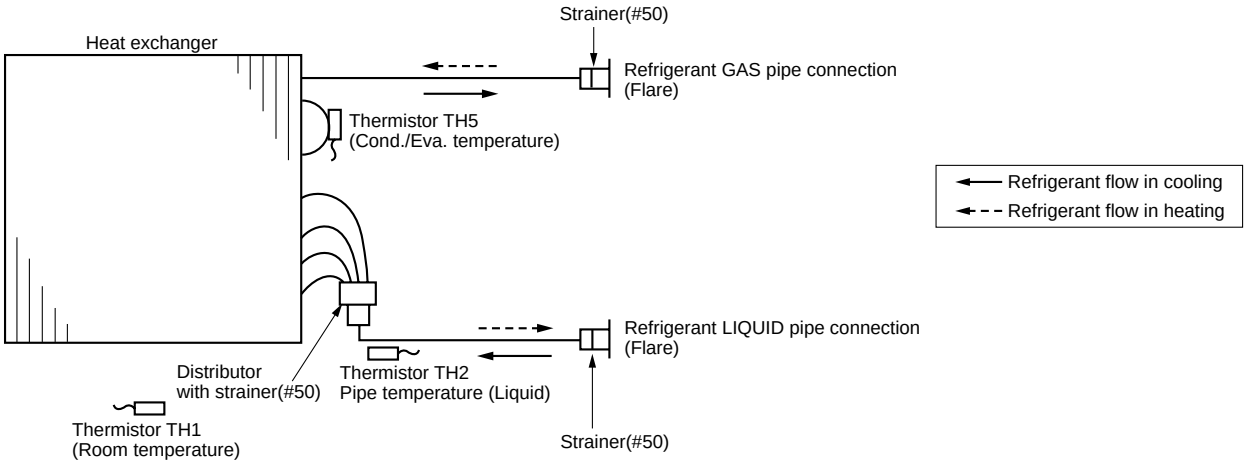

5-2. OUTDOOR UNIT

PUHZ-RP35VHA2
PUHZ-RP50VHA2

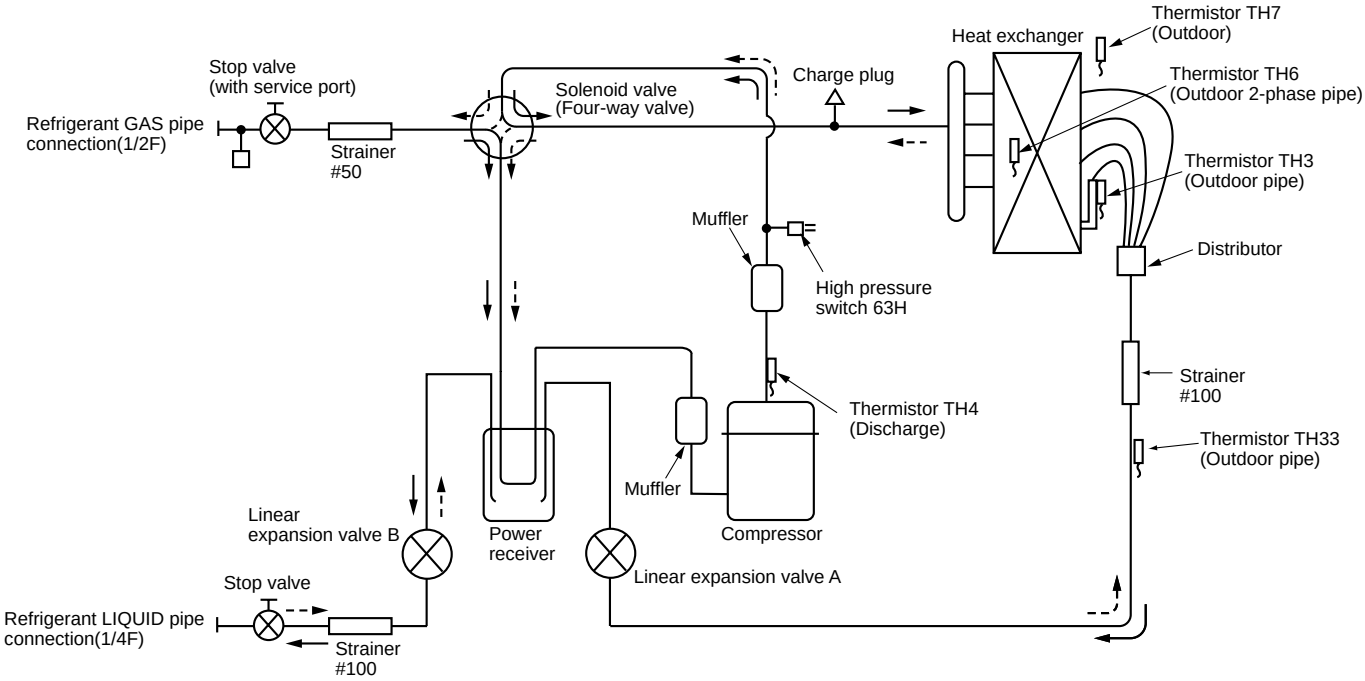

PUHZ-RP60VHA2
PUHZ-RP71VHA2

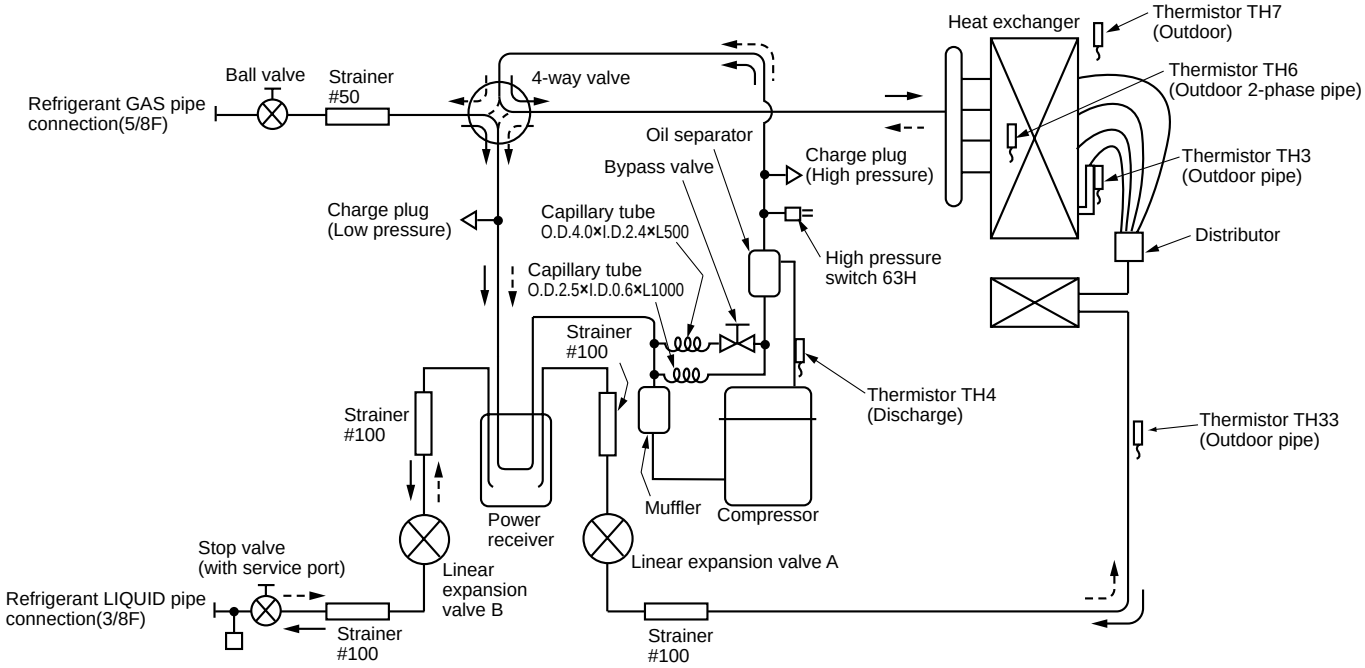

PUHZ-RP100VHA2 PUHZ-RP100YHA2
PUHZ-RP125VHA2 PUHZ-RP125YHA2
PUHZ-RP140VHA2 PUHZ-RP140YHA2

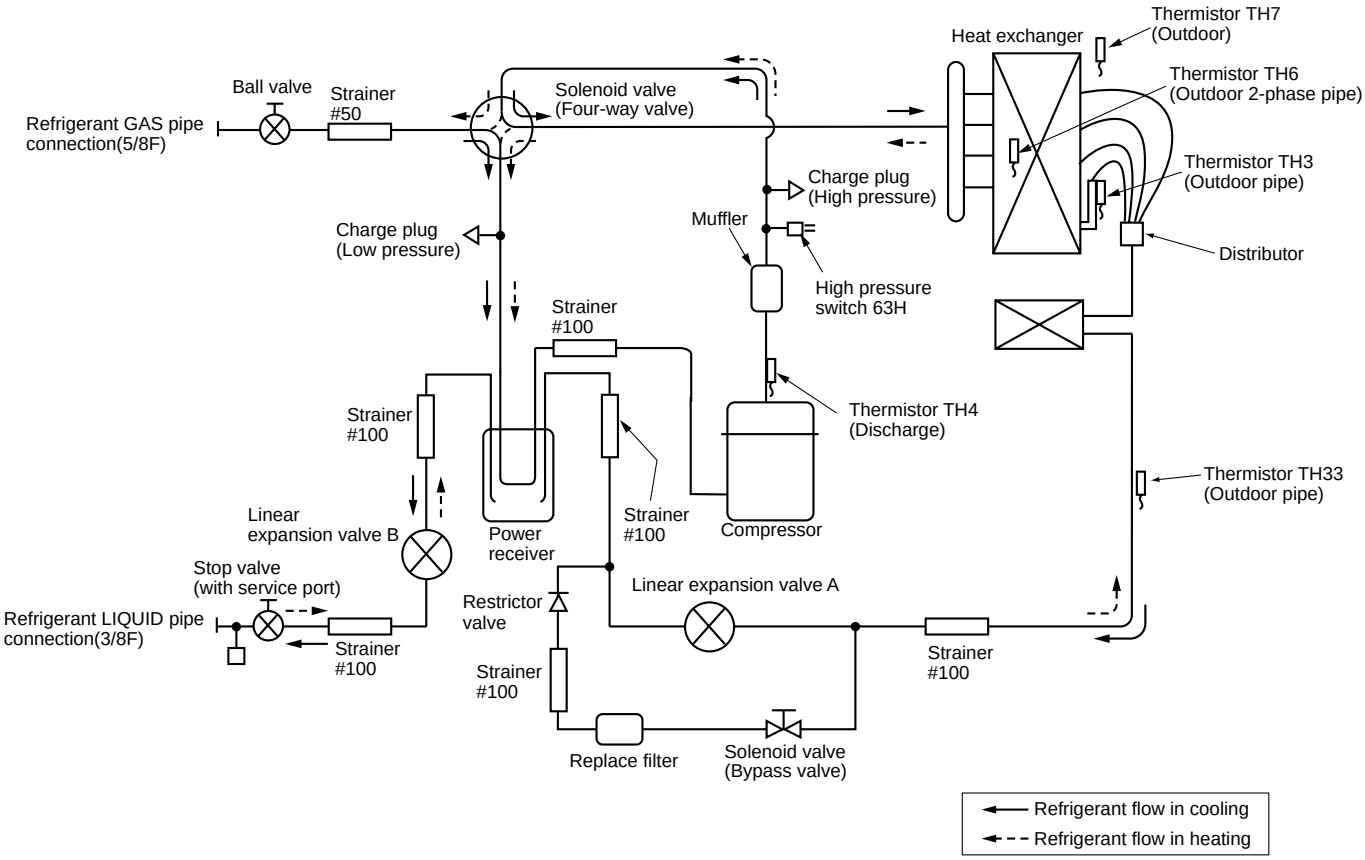

6 PERFORMANCE CURVES

FOR THE COMBINATION OF OUTDOOR UNIT PUHZ-RP•VHA2, PUHZ-RP100~140YHA2

Cooling capacity

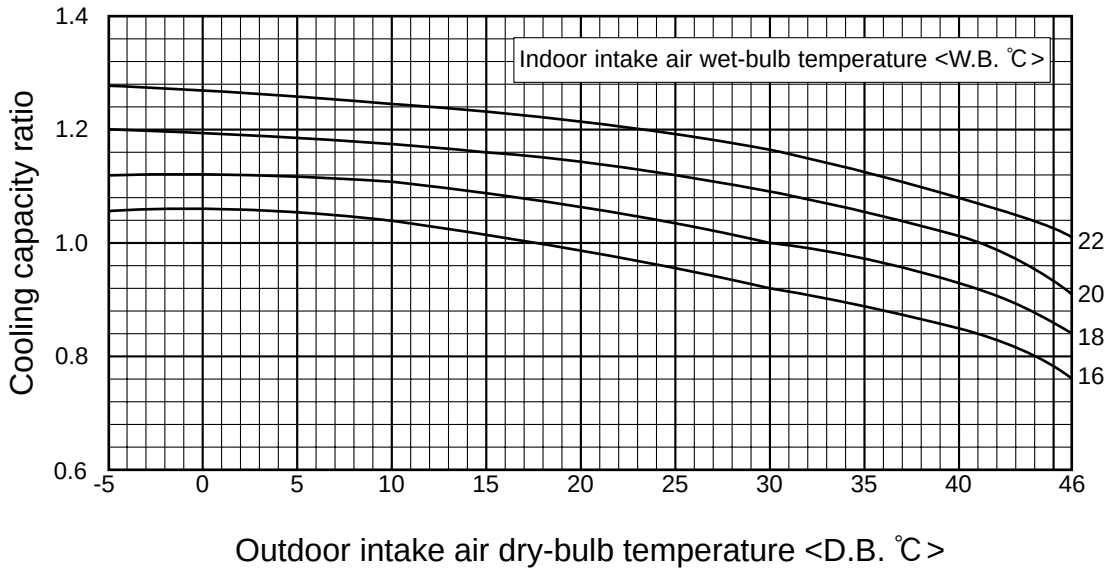

Cooling input

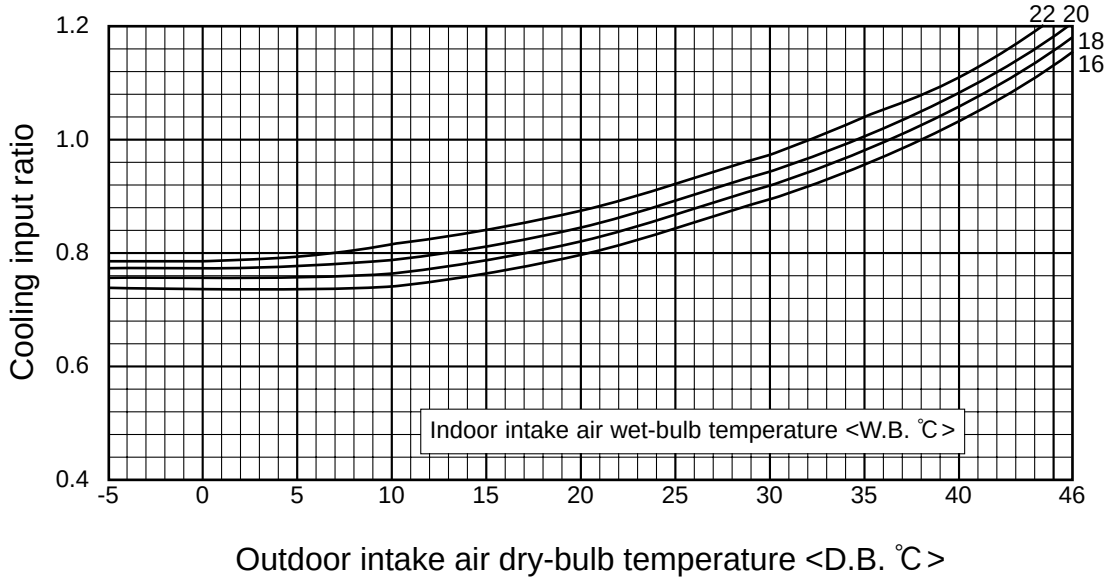

Note : This diagrams show the case where the operation frequency of a compressor is fixed.

Heating capacity

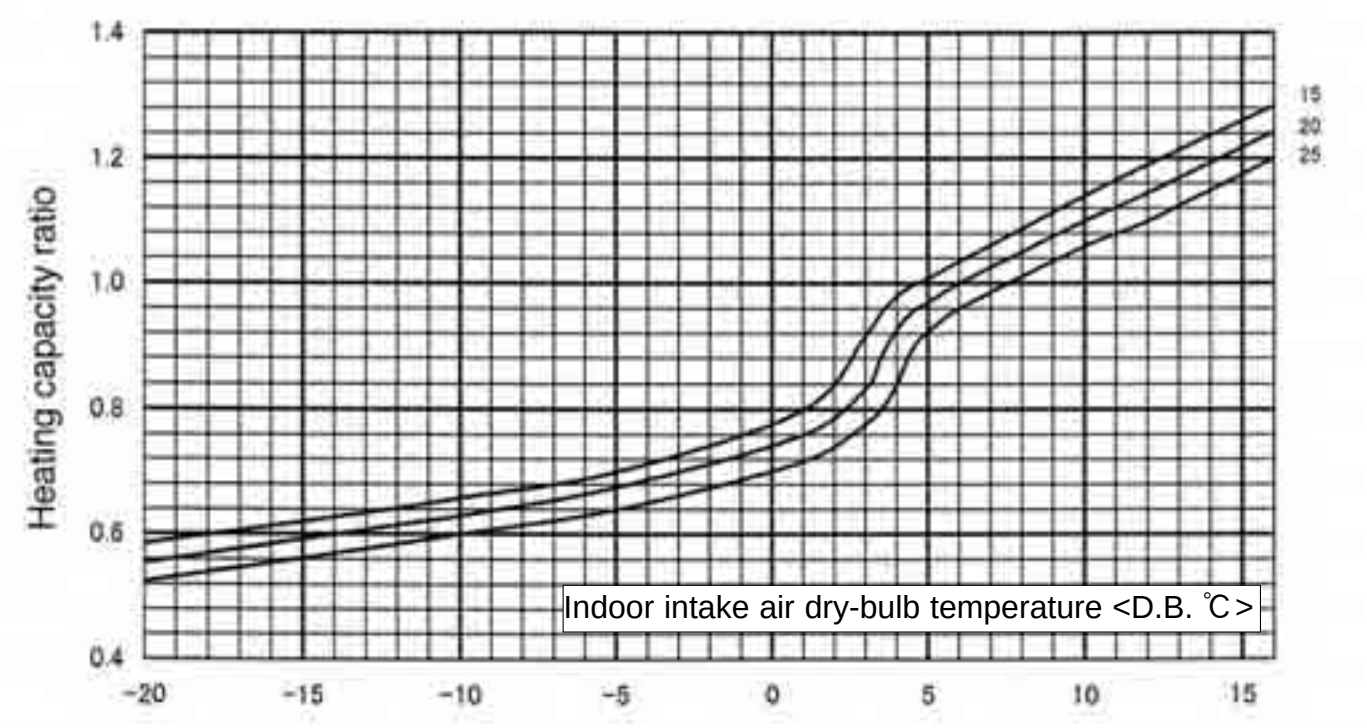

Heating input

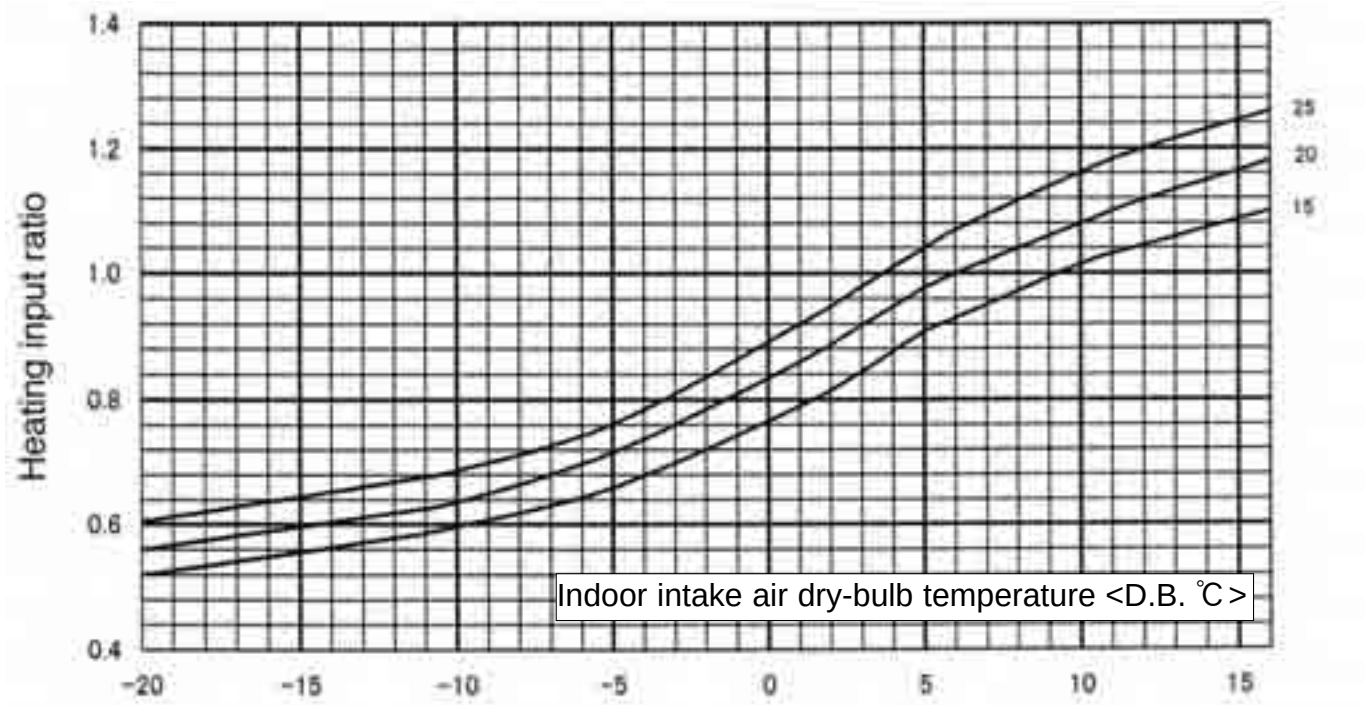

Note : This diagrams show the case where the operation frequency of a compressor is fixed.

PUHZ-RP·VHA2, PUHZ-RP100~140YHA2

Cooling capacity correction factors

Outdoor unit	Refrigerant piping length (one way)									
	5m	10m	20m	30m	40m	50m	55m	60m	70m	80m
PUHZ-RP35VHA2	1.00	0.992	0.976	0.962	0.949	0.936	0.930	—	—	—
PUHZ-RP50VHA2	1.00	0.985	0.957	0.931	0.908	0.886	0.876	—	—	—
PUHZ-RP60VHA2	1.00	0.992	0.976	0.962	0.949	0.936	0.930	—	—	—
PUHZ-RP71VHA2	1.00	0.988	0.966	0.946	0.929	0.913	0.905	—	—	—
PUHZ-RP100VHA2 PUHZ-RP100YHA2	1.00	0.985	0.957	0.931	0.908	0.886	0.876	0.865	0.846	0.829
PUHZ-RP125VHA2 PUHZ-RP125YHA2	1.00	0.981	0.946	0.914	0.885	0.858	0.845	0.834	0.812	0.792
PUHZ-RP140VHA2 PUHZ-RP140YHA2	1.00	0.976	0.931	0.893	0.858	0.827	0.813	0.800	0.775	0.753

Heating capacity correction factors

Outdoor unit	Refrigerant piping length (one way)									
	5m	10m	20m	30m	40m	50m	55m	60m	70m	80m
PUHZ-RP35VHA2	1.00	0.997	0.991	0.985	0.979	0.973	0.970	—	—	—
PUHZ-RP50VHA2	1.00	0.997	0.991	0.985	0.979	0.973	0.970	—	—	—
PUHZ-RP60VHA2	1.00	0.997	0.991	0.985	0.979	0.973	0.970	—	—	—
PUHZ-RP71VHA2	1.00	0.997	0.991	0.985	0.979	0.973	0.970	—	—	—
PUHZ-RP100VHA2 PUHZ-RP100YHA2	1.00	0.997	0.991	0.985	0.979	0.973	0.970	0.967	0.961	0.955
PUHZ-RP125VHA2 PUHZ-RP125YHA2	1.00	0.997	0.991	0.985	0.979	0.973	0.970	0.967	0.961	0.955
PUHZ-RP140VHA2 PUHZ-RP140YHA2	1.00	0.997	0.991	0.985	0.979	0.973	0.970	0.967	0.961	0.955

8 APPLICABLE EXTENSION PIPE FOR EACH MODEL

8-1. PIPE LENGTH

8-1-1. 1:1 SYSTEM

Pipe length

<Table 1> Maximum pipe length

Liquid pipe (mm) OD	ϕ6.35			ϕ9.52			ϕ12.7	
Liquid pipe (mm) Thickness	t0.8			t0.8			t0.8	
Gas pipe (mm) OD	ϕ9.52	ϕ12.7	ϕ15.88	ϕ12.7	ϕ15.88	ϕ19.05	ϕ15.88	ϕ19.05
Gas pipe (mm) Thickness	t0.8	t0.8	t1.0	t0.8	t1.0	t1.0	t1.0	t1.0
RP35•50	□ 30m ※1 [30m]	Standard size 50m [30m]	○ ※2 30m [30m]	△ 30m [20m]	△※2 30m [20m]			
RP60•71		□ 10m [10m]	○ 10m [10m]	□ 30m [30m]	Standard size 50m [30m]		△ 30m [20m]	
RP100~140					Standard size 50m ※3 [30m]	○ 50m [30m]	△ 50m [20m]	△ 50m [20m]

※1. Maximum pipe length is RP50, it becomes 10m.
※2. Change the SW8-1 on the outdoor controller circuit board from OFF to ON.
※3. The maximum length is 75m in case of new pipes.

<Marks in the table>

○: It can be used.
□: Cooling capacity is lowered.
△: Additional refrigerant charge is required when the pipe length exceeds 10m.

50m — The maximum pipe length
[30m] — Charge-less pipe length

8-1-2. TWIN AND TRIPLE SYSTEM

(1) TWIN SYSTEM

<Table 2> Maximum pipe length

			RP71(RP35×2)		RP100(RP50×2)			RP125(RP60×2) • RP140(RP71×2)		
Main pipe (mm) [A]	Liquid pipe		ϕ6.35	ϕ9.52	ϕ9.52	ϕ9.52	ϕ12.7	ϕ9.52	ϕ9.52	ϕ12.7
Main pipe (mm) [A]	Gas pipe		ϕ12.7	ϕ15.88	ϕ15.88	ϕ19.05	ϕ19.05	ϕ15.88	ϕ19.05	ϕ19.05
Branch pipe (mm) [B, C]	Liquid pipe	ϕ6.35		Standard size 50m [30m]	Standard size 50m ※ [30m]	○ 50m [30m]	△ 50m [20m]			
	Gas pipe	ϕ12.7								
	Liquid pipe	ϕ9.52		○ 50m [30m]	○ 50m [30m]	○ 50m [30m]	△ 50m [20m]	Standard size 50m ※ [30m]	○ 50m [30m]	△ 50m [20m]
	Gas pipe	ϕ15.88								
	Liquid pipe	ϕ12.7								
	Gas pipe	ϕ19.05								

※ The maximum length is 75m in case of new pipes.

(2) TRIPLE SYSTEM

<Table 3> Maximum pipe length

			RP140(RP50×3)		
Main pipe (mm) [A]	Liquid pipe		ø9.52	ø9.52	ø12.7
Main pipe (mm) [A]	Gas pipe		ø15.88	ø19.05	ø19.05
Branch pipe (mm) [B, C, D]	Liquid pipe	ø6.35	Standard size 50m ※ [30m]	○ 50m [30m]	△ 50m [20m]
	Gas pipe	ø12.7			
	Liquid pipe	ø9.52	○ 50m [30m]	○ 50m [30m]	△ 50m [20m]
	Gas pipe	ø15.88			
	Liquid pipe	ø12.7			
	Gas pipe	ø19.05			

※ The maximum length is 75m in case of new pipes.

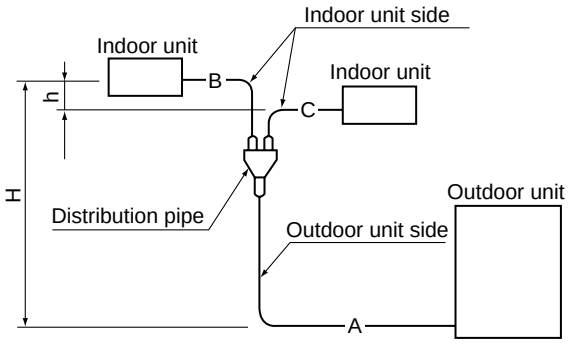

<TWIN SYSTEM>
Total length A + B + C
RP71 : 50 m
RP100-140: 75 m

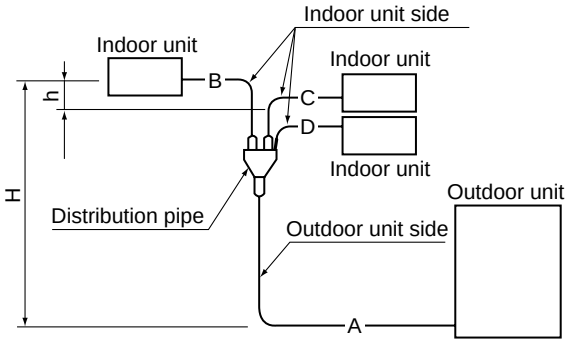

<TRIPLE SYSTEM>
Total length A + B + C + D
RP140: 75 m

8-2. ADJUSTING THE AMOUNT OF REFRIGERANT

• Check additional refrigerant charging amount referring to table 5.6 when liquid pipe is one size larger than standard diameter.

<Table 5> Required additional charge when the pipe size is larger than the standard diameter (1:1 SYSTEM)

	Liquid pipe dia	Refrigerant amount to be added
35,50	ϕ9.52	60 g per 1 m
60,71	ϕ12.7	100 g per 1 m
100~140	ϕ12.7	100 g per 1 m

<Table 6> Required additional charge when the pipe size is larger than the standard diameter (TWIN/TRIPLE SYSTEM)

Capacity	When the extension pipe length (main piping + branch piping) exceed 20 m
71~140	Additional refrigerant amount △W(g) = (100 × L1) + (60 × L2) + (30 × L3) - 2000

If the calculation produces a negative number (△W ≦ 0), additional charging is not necessary.
L1: ϕ12.7 liquid pipe length (m)
L2: ϕ9.52 liquid pipe length (m)
L3: ϕ6.35 liquid pipe length (m)

<Table 7> Additional refrigerant charging amount for pipe of standard diameter

Type	Outdoor unit	Permitted pipe length	Amount of unit filling refrigerant (kg)	Additional refrigerant charging amount for pipe length exceeding 30 m (kg)				
				31 – 40m	41 – 50m	51 – 60m	61 – 70m	71 – 75m
1 : 1 system	PUHZ-RP35,50VHA2	50m or less	2.5kg	0.2kg	0.4kg			
	PUHZ-RP71VHA2		3.5kg	0.6kg	1.2kg			
	PUHZ-RP100~140	75m or less	5.0kg	0.6kg	1.2kg	1.8kg	2.4kg	

Type	Outdoor unit	Permitted pipe length	Amount of unit filling refrigerant (kg)	Additional refrigerant charging amount for pipe length exceeding 30 m (kg)				
				31 – 40m	41 – 50m	51 – 60m	61– 70m	71 – 75m
Twin Triple system	PUHZ-RP71VHA2	50m or less	3.5kg	0.6kg	1.2kg			
	PUHZ-RP100~140	75m or less	5.0kg	0.6kg	1.2kg	1.8kg	2.4kg	

8-3. CAPACITY CORRECTION CURVES

Cooling and heating capacity is lowered according to pipe length. Capacity can be obtained by referring to the capacity curves below. When the diameter of gas pipe is one size smaller than standard diameter, cooling capacity is lowered comparing to the standard diameter. The lowered capacity can be obtained by referring to capacity curves for gas pipe which is one size smaller than standard size.

Corrected pipe length (m) = actual pipe length (m) + number of bends x 0.3 (m)

[Sample calculation]

Indoor unit RP60 × 2 units (Twin system)
Outdoor unit RP125 × 1

■ **Condition** **Using existing pipes.**

- **Outdoor unit side**
  Liquid pipe ϕ12.7 / Gas pipe ϕ19.05
  pipe length (A) 20m

- **Indoor unit side**
  Liquid pipe ϕ9.52 / Gas pipe ϕ15.88
  pipe length (B) 20m + (C) 15m

1) Farthest piping length **20m + 15m = 35m**
Number of bends : 10
2) Corrected piping length **35m + 0.3 × 10 = 38m**
3) Capacity correction **Outdoor unit side's gas pipe ϕ19.05**
Standard ϕ15.88 → 1 size up
Refer to ①Capacity curves <Standard size>
4) Capacity **Cooling capacity = Standard cooling capacity × 0.89**
Heating capacity = Standard heating capacity × 0.98

① Capacity curves for PUHZ-RP • HA2 model <Standard size>

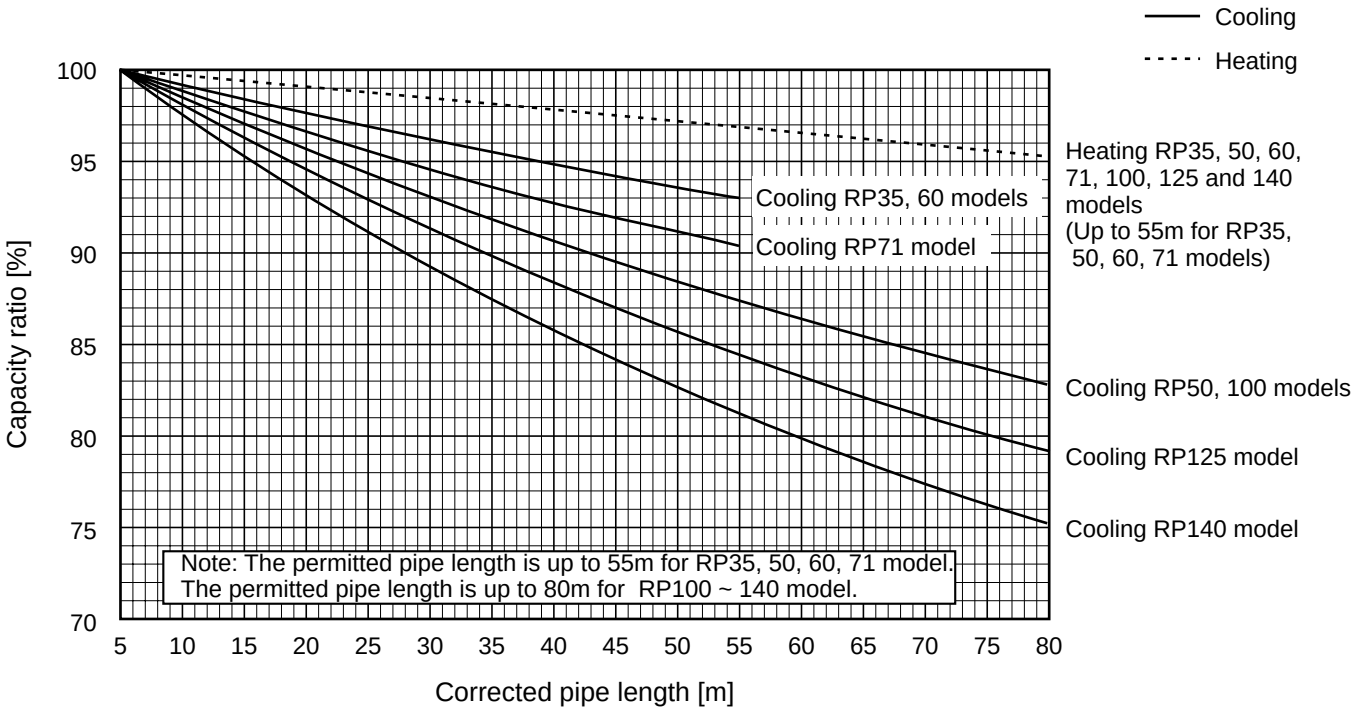

② **Capacity curve for PUHZ-RP35, 50 models**
<When gas pipe is one size smaller than standard size>

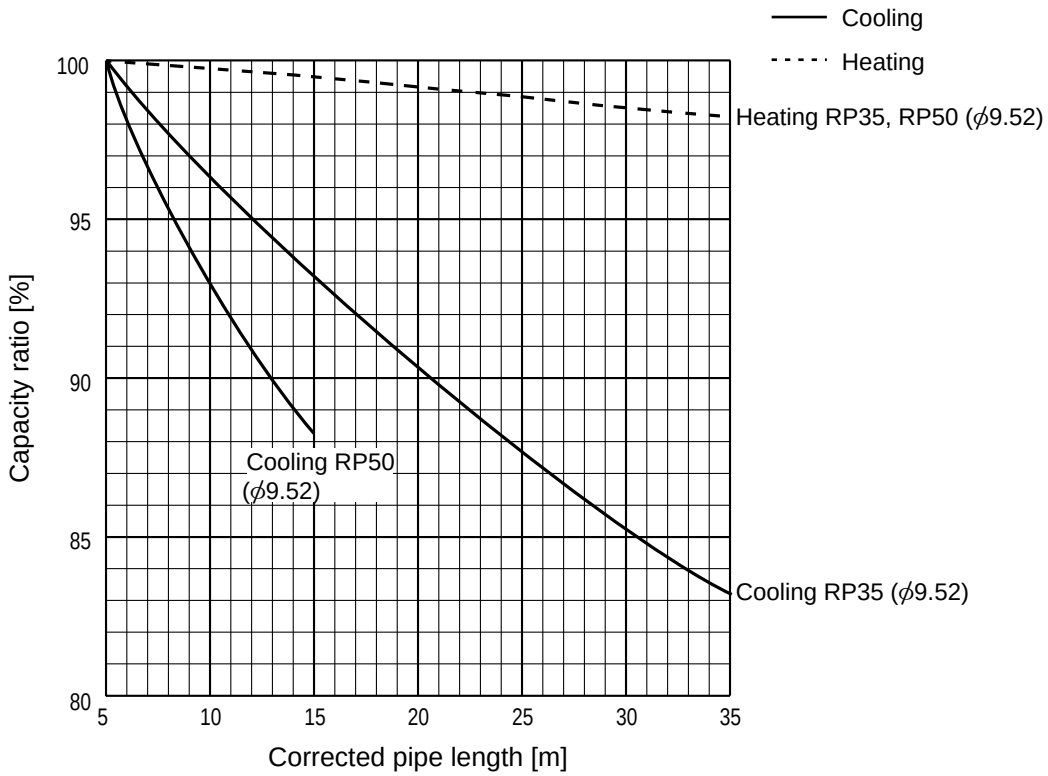

③ **Capacity curve for PUHZ-RP60, 71 models**
<When gas pipe is one size smaller than standard size>

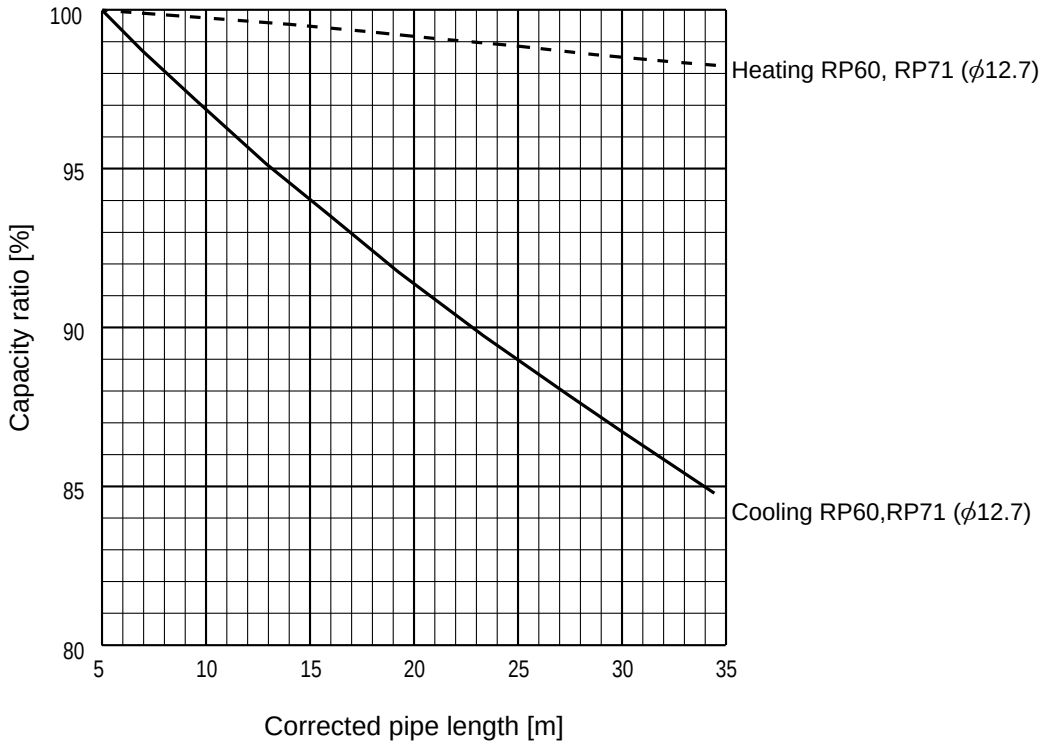

④ **When gas pipe is one size larger than standard size for PUHZ-RP100, 125 and 140.**

① Capacity can be obtained by referring to capacity curves of standard size.

9 AIR FLOW DATA

9-1. OUTLET AIR SPEED AND COVERAGE RANGE

	PLA-RP35AA	PLA-RP50AA	PLA-RP60AA	PLA-RP71AA	PLA-RP100AA2	PLA-RP125AA2	PLA-RP140AA2
Air flow m^3/min.	14	18	18	20	28	30	30
Air speed m/sec.	2.8	3.6	3.6	4.0	4.9	6.6	6.6
Coverage range m	4.0	5.2	5.2	5.7	7.4	8.9	8.9

	PCA-RP50GA	PCA-RP50GA2	PCA-RP60GA	PCA-RP71GA	PCA-RP100GA	PCA-RP125GA	PCA-RP140GA
Air flow m^3/min	13	18	18	18	25	34	34
Air speed m/sec	3.7	3.8	3.8	3.8	4.1	4.4	4.4
Coverage range m	8.8	10.4	10.4	10.4	12.6	15.2	15.2

	PCA-RP71HA	PCA-RP125HA
Air flow m^3/min	19	38
Air speed m/sec	2.9	4.2
Coverage range m	7.9	13.2

	PKA-RP35GAL	PKA-RP50GAL
Air flow m^3/min	12	12
Air speed m/sec	5.3	5.3
Coverage range m (ft)	10(32.8)	10(32.8)

	PKA-RP50FAL2	PKA-RP60FAL	PKA-RP71FAL	PKA-RP100FAL
Air flow m^3/min	20	20	20	28
Air speed m/sec	4.9	4.9	4.9	5.4
Coverage range m (ft)	12.4(40.7)	12.4(40.7)	12.4(40.7)	15.3(50.2)

	PSA-RP71GA	PSA-RP100GA	PSA-RP125GA	PSA-RP140GA
Air flow m^3/min	18	31	33	35
Air speed m/sec	2.6	4.5	4.8	4.9
Coverage range m	8.3	14.3	15.2	16.1

The air coverage range is the value up to the position where the air speed is 0.25m/sec. when air is blown out horizontally from the unit at the Hi notch position.
The coverage range should be used only as a general guideline since it varies according to the size of the room and the furniture inside the room.

9-2. PLA-RP·AA(2)

9-2-1. FRESH AIR INTAKE AMOUNT

1. Adjusting the width of the air outlets

- **Change of outlet numbers**
  [The optional air outlet shutter is necessary.]

  To change the air outlet numbers to 3-, or 2-way outlet, the outlets should be closed with the optional air outlet shutter.)

  (When the air outlets are closed, close the vane by removing the vane connector.)

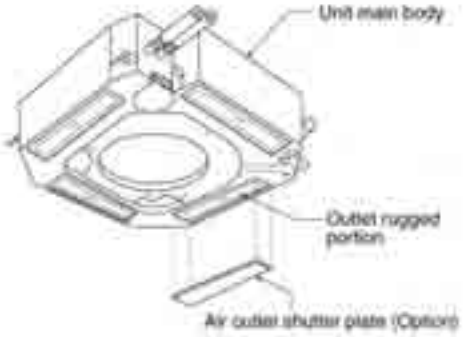

- **For the portion to be cut (V-shaped groove), see the figure below (as seen from the rear of the panel).**

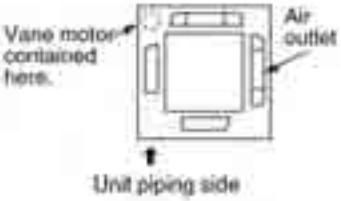

2. Fresh air intake (Installation of site)

- By mounting the optional multi-function casement to the indoor unit main body, and mounting the duct and duct flange (field supply) onto it further, fresh exterior air intake can be accomplished.
  (The mounting of the multi-function casement increases the height of the ceiling plenum by 135mm.)

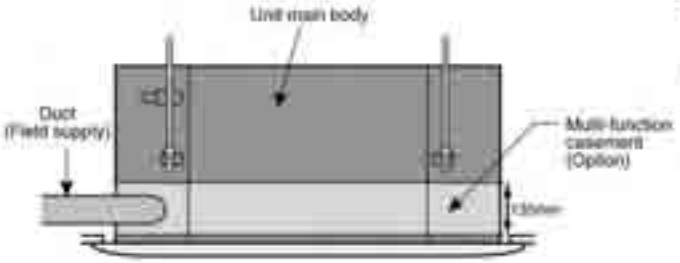

Direct exterior air intake into the main body is also possible.

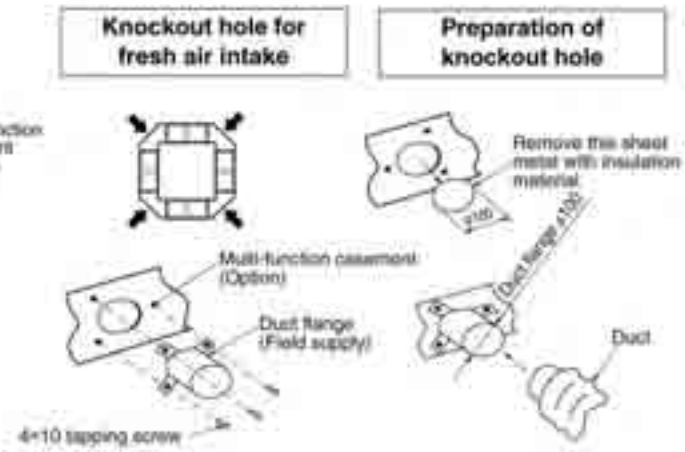

3. Fresh air intake volume & static pressure characteristics

① PLA-RP71AA
(at using of multi-function casement, standard filter)

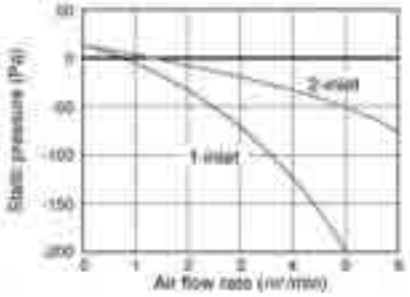

② PLA-RP71AA (Direct intake to unit)

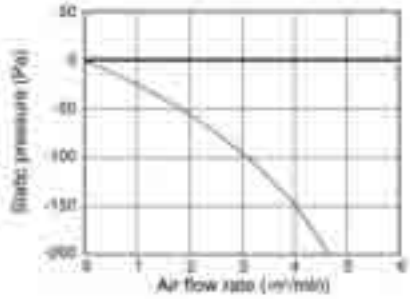

③ PLA-RP100/RP125/RP140AA2
(at using of multi-function casement, standard filter)

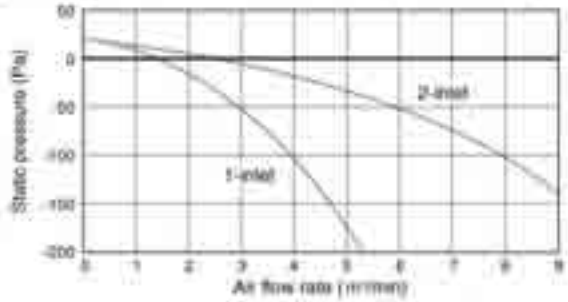

④ PLA-RP100/RP125/RP140AA2 (Direct intake to unit)

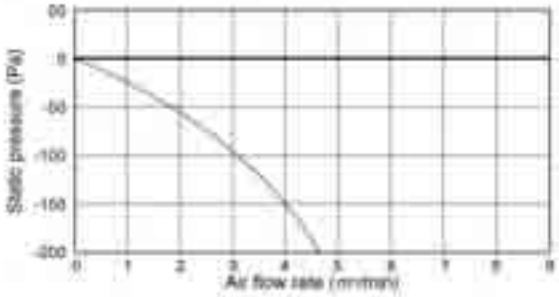

How to read the chart

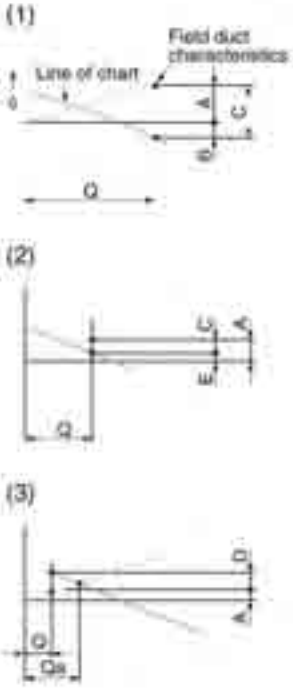

Q ..... Design fresh air intake volume (m^3/min)

A ..... Static pressure loss [Pa] of fresh air intake duct at air flow rate of Q

B ..... Required boost pressure [Pa] of air conditioner inlet at air flow rate of Q

C ..... Required static pressure [Pa] of booster fan at air flow rate of Q

D ..... Required compensation [Pa] for static pressure loss of fresh air intake duct to make air flow rate Q

E ..... Static pressure [Pa] of indoor unit at air flow rate of Q

Qa .. Estimated fresh air intake [m^3/min] without compensation of D

9-2-2. BRANCH DUCT (Installation at site)

To be compatible with both round and rectangular branch ducts, knockout holes are designed to fit to both shapes for flexible on-site installation.

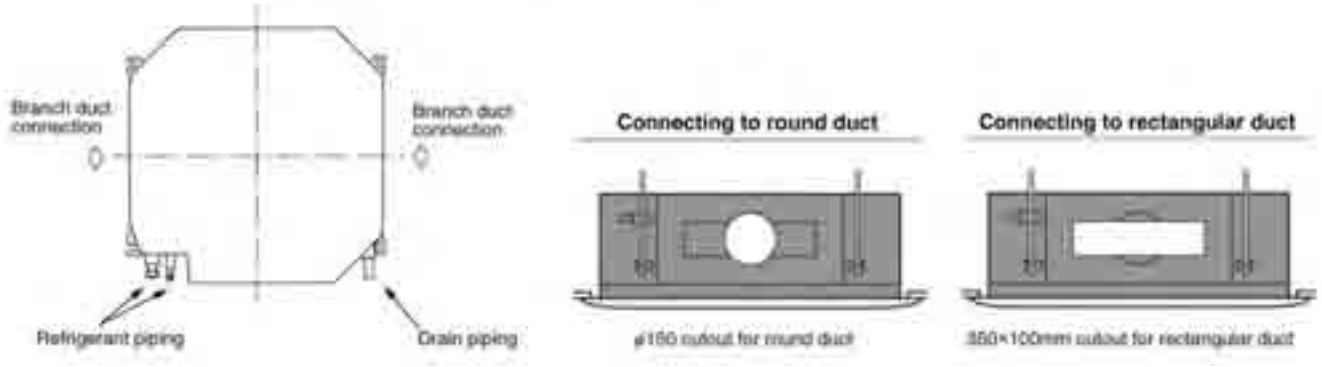

Branch duct air flow rate/static pressure characteristics
PLA-RP35AA

4-way air flow (horizontal vane) Rectangular duct

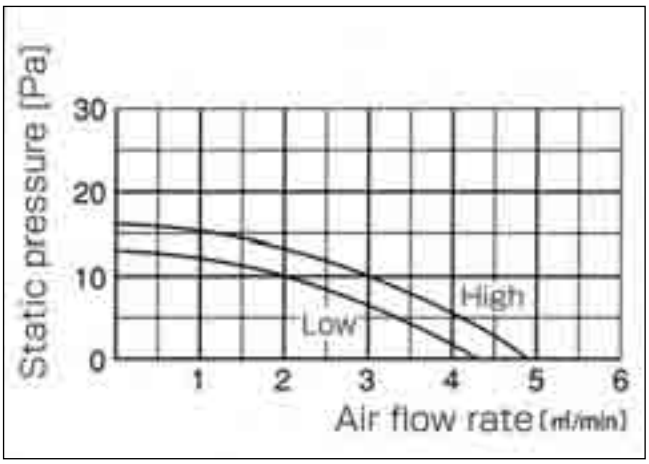

4-way air flow (horizontal vane) Round duct

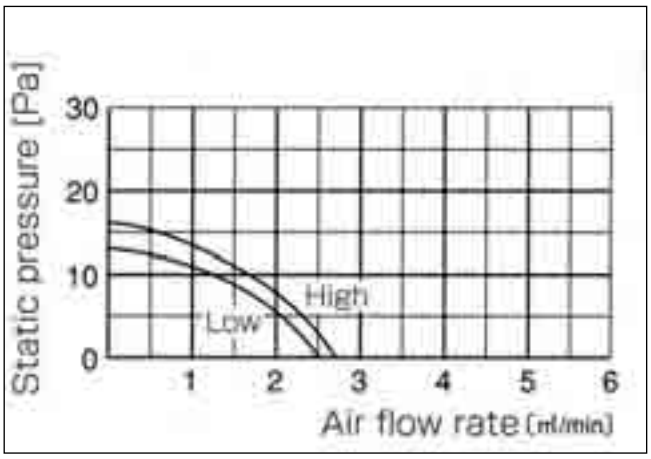

3-way air flow (horizontal vane) Rectangular duct

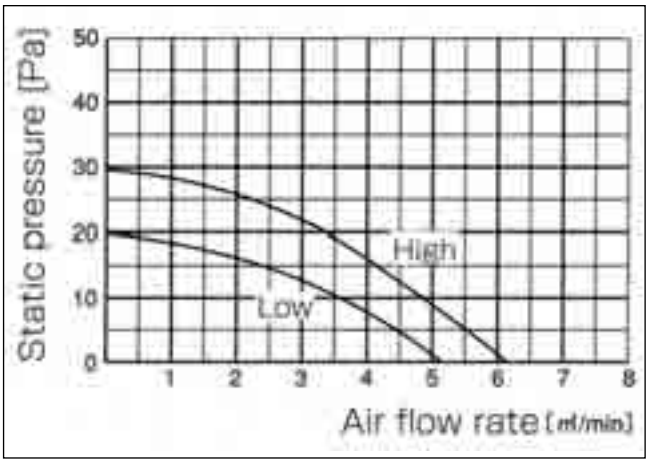

3-way air flow (horizontal vane) Round duct

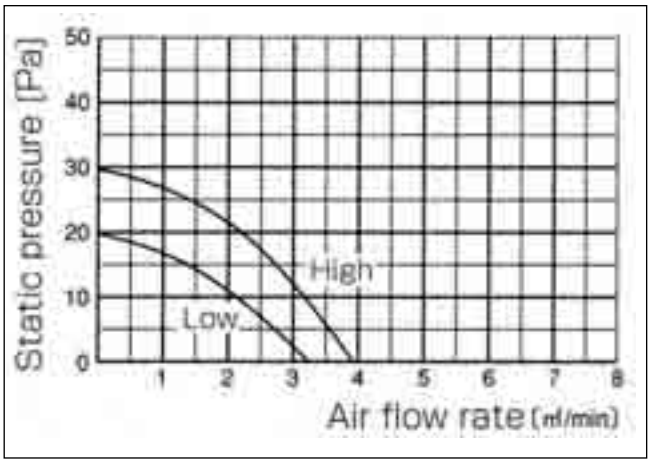

2-way air flow (horizontal vane) Rectangular duct

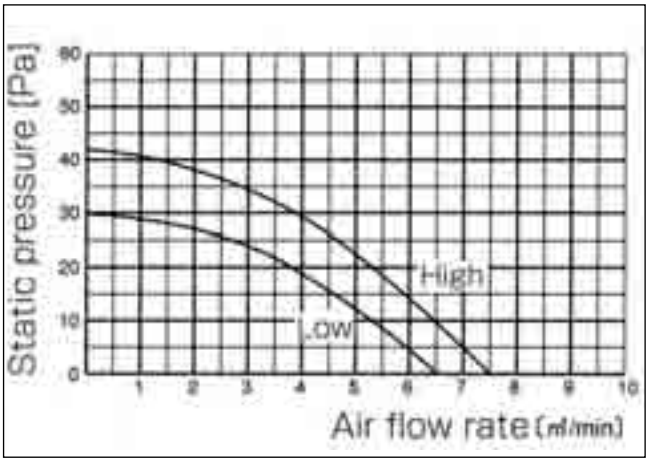

2-way air flow (horizontal vane) Round duct

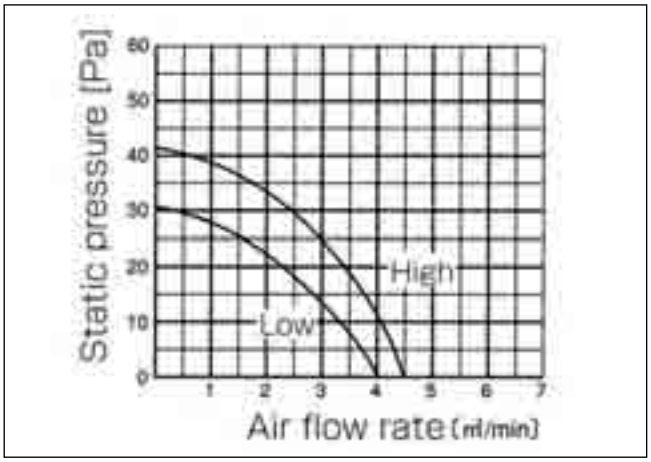

PLA-RP50AA
PLA-RP60AA

4-way air flow (horizontal vane) Rectangular duct

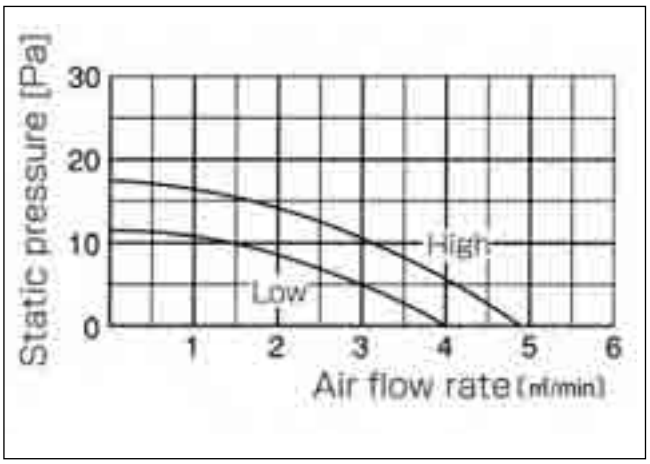

4-way air flow (horizontal vane) Round duct

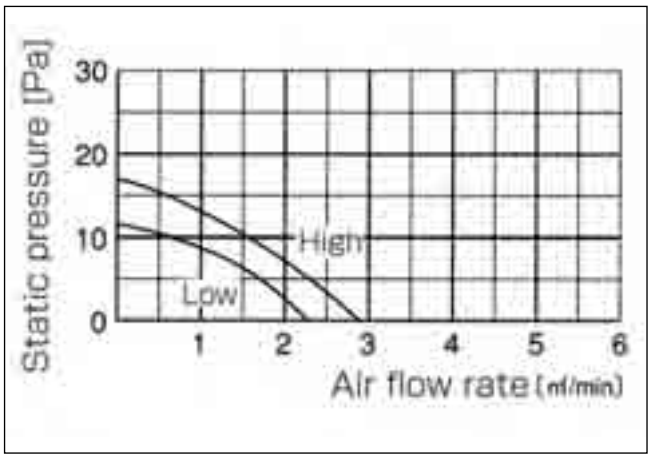

3-way air flow (horizontal vane) Rectangular duct

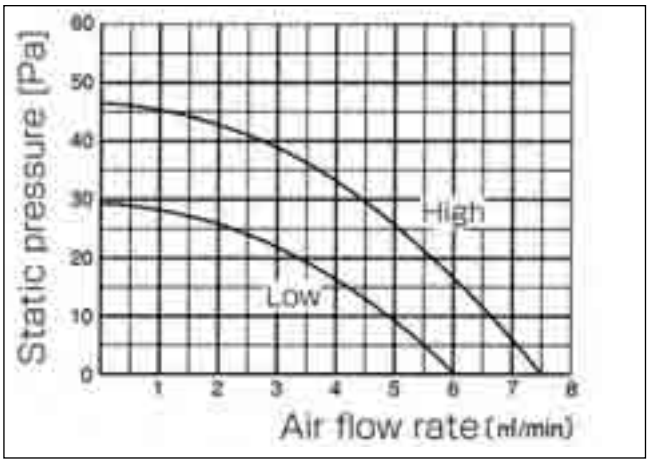

3-way air flow (horizontal vane) Round duct

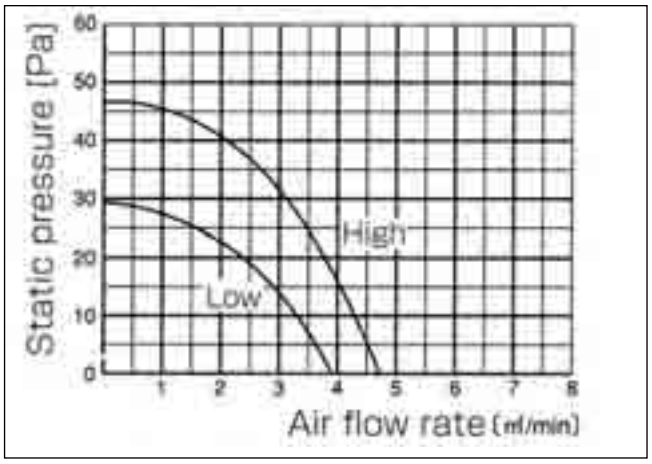

2-way air flow (horizontal vane) Rectangular duct

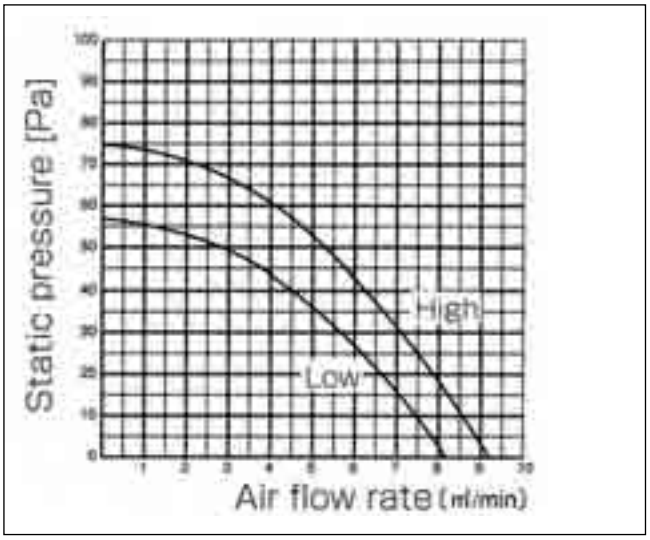

2-way air flow (horizontal vane) Round duct

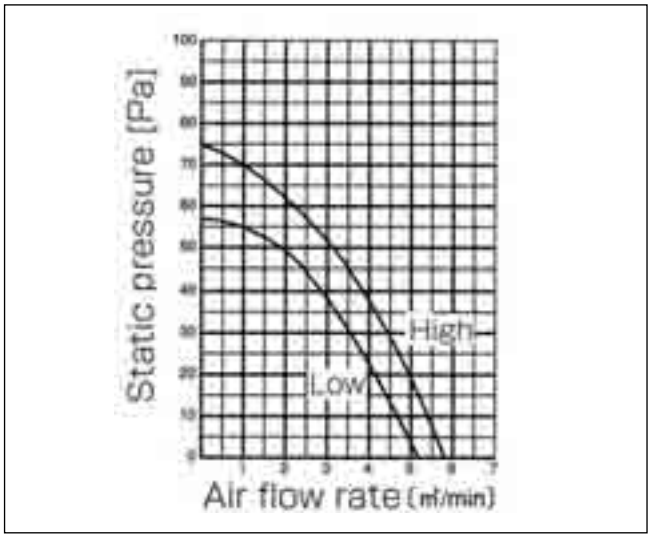

PLA-RP71AA

4-way air flow (horizontal vane) Rectangular duct

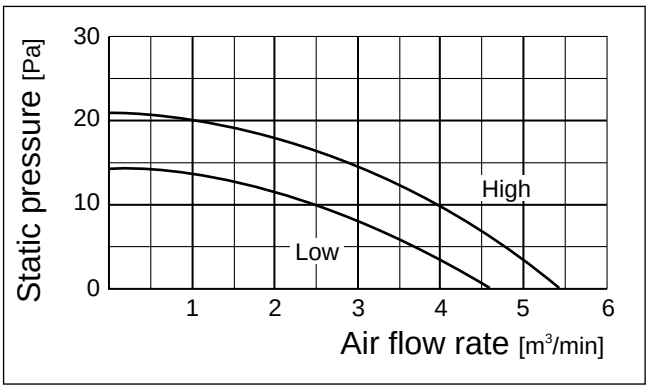

4-way air flow (horizontal vane) Round duct

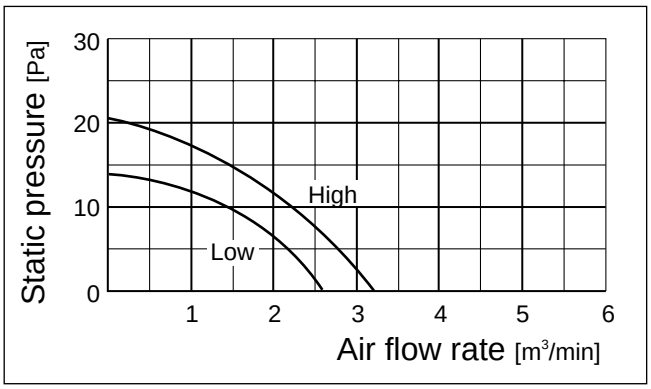

3-way air flow (horizontal vane) Rectangular duct

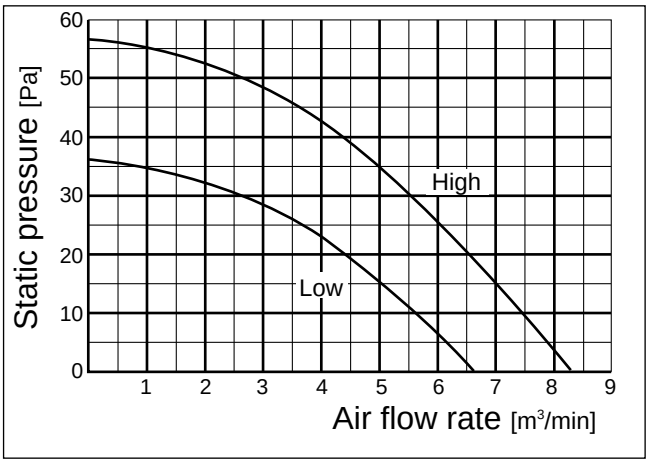

3-way air flow (horizontal vane) Round duct

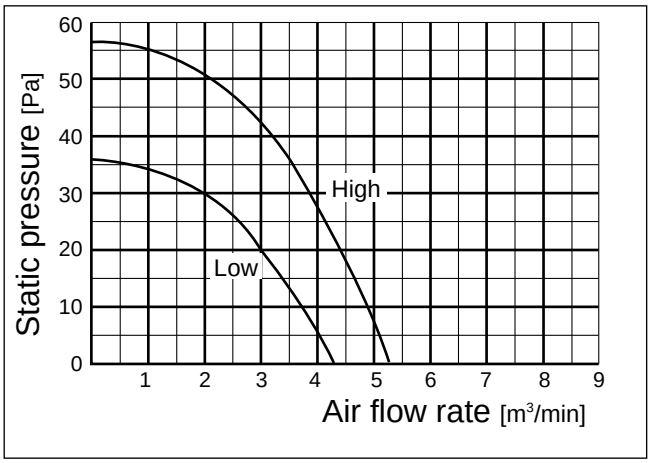

2-way air flow (horizontal vane) Rectangular duct

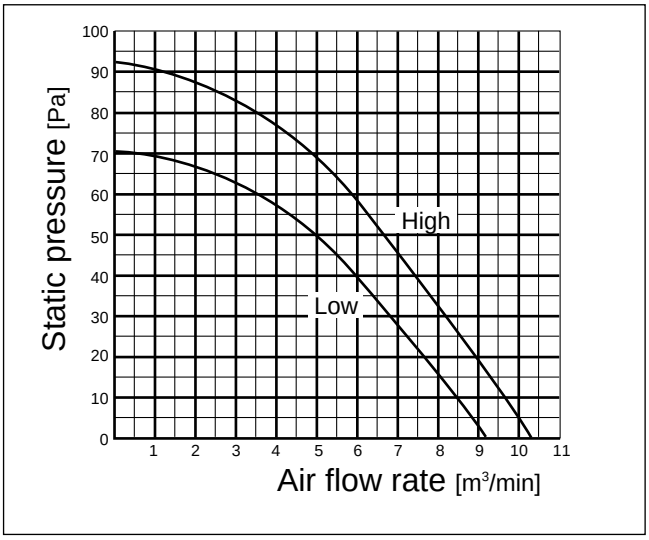

2-way air flow (horizontal vane) Round duct

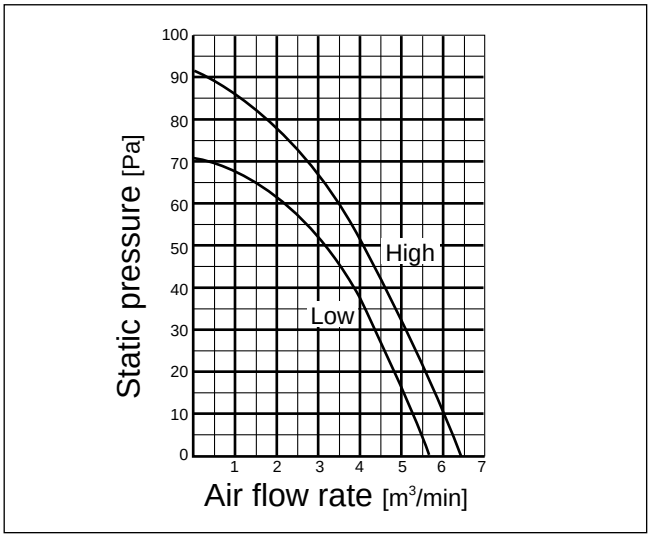

PLA-RP100AA2

4-way air flow (horizontal vane) Rectangular duct

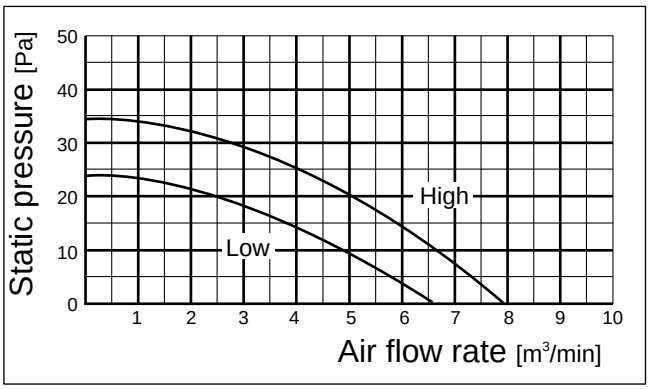

4-way air flow (horizontal vane) Round duct

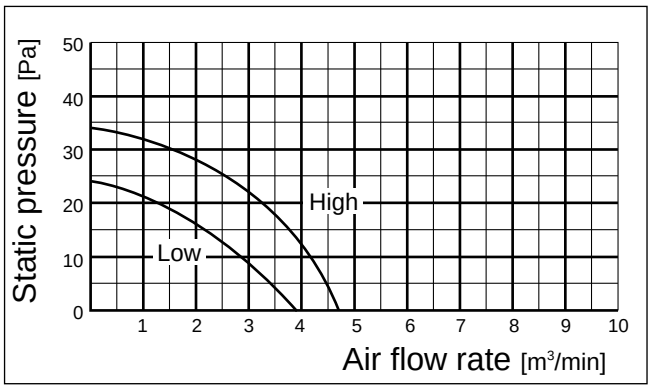

3-way air flow (horizontal vane) Rectangular duct

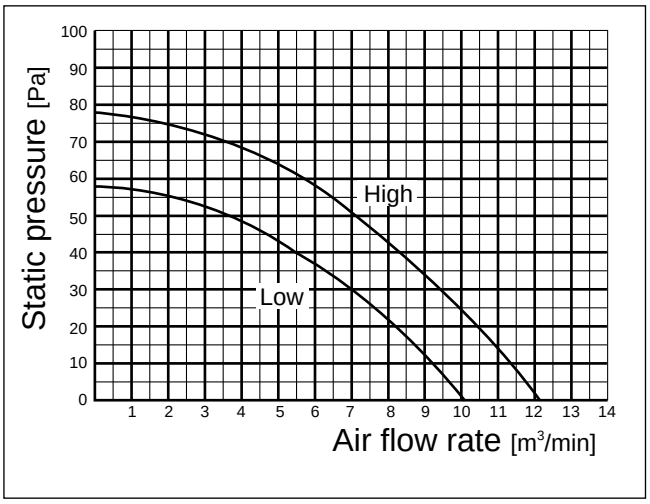

3-way air flow (horizontal vane) Round duct

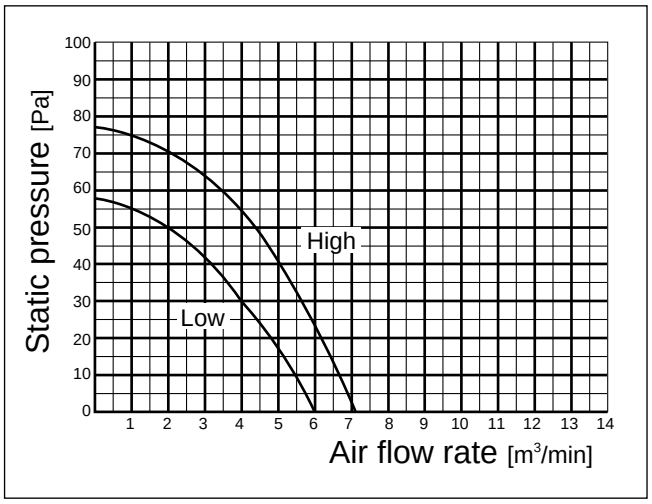

2-way air flow (horizontal vane) Rectangular duct

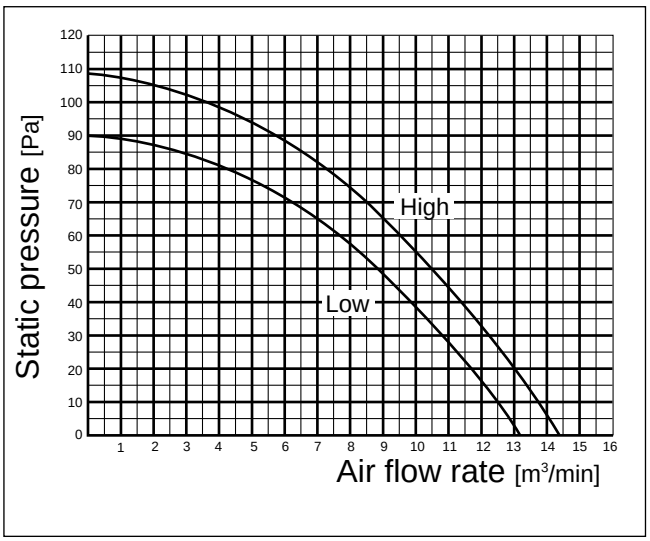

2-way air flow (horizontal vane) Round duct

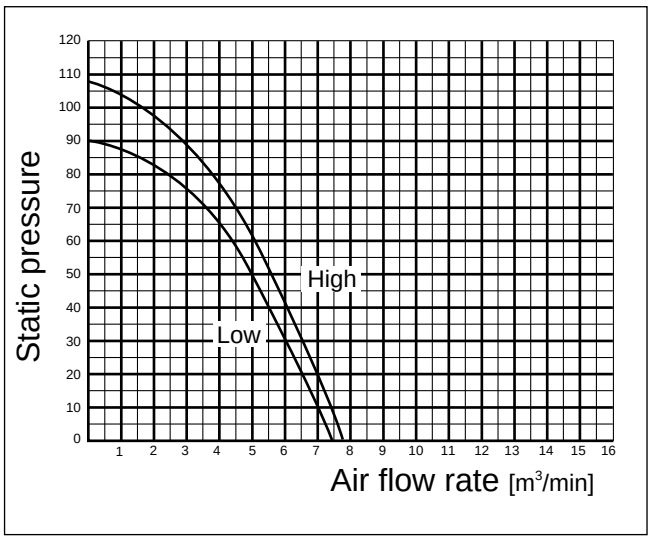

PLA-RP125AA2
PLA-RP140AA2

4-way air flow (horizontal vane) Rectangular duct

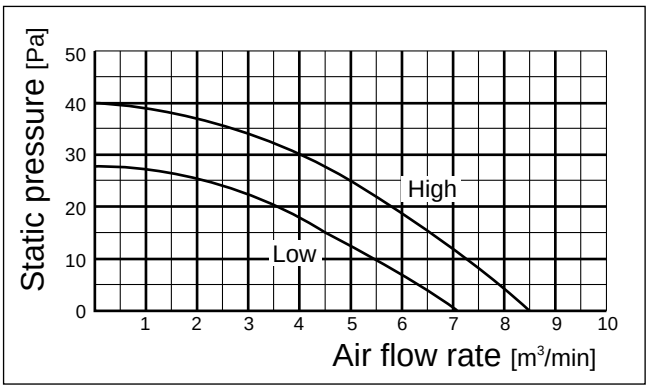

4-way air flow (horizontal vane) Round duct

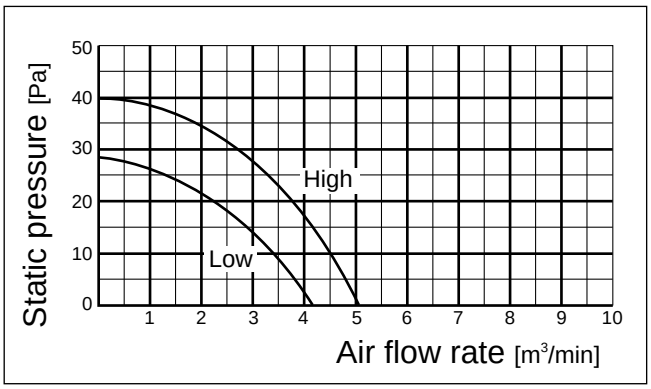

3-way air flow (horizontal vane) Rectangular duct

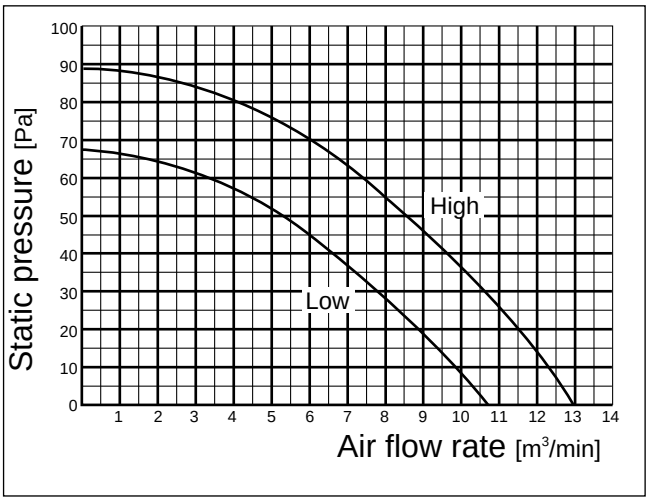

3-way air flow (horizontal vane) Round duct

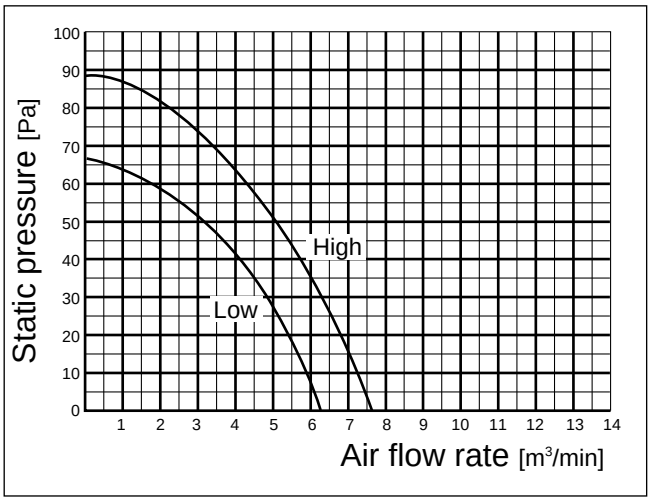

2-way air flow (horizontal vane) Rectangular duct

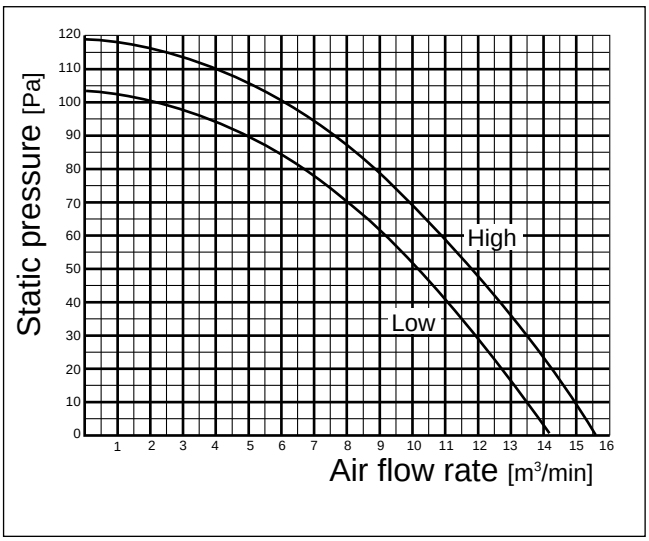

2-way air flow (horizontal vane) Round duct

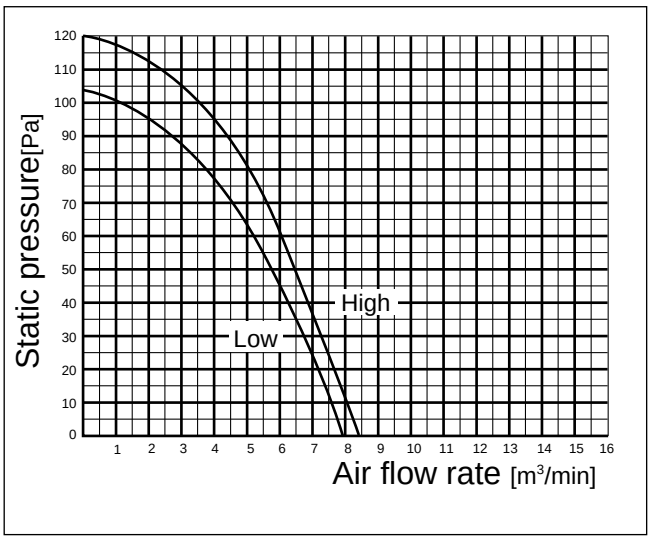

9-3. PEAD-RP·EA, EA2, GA

FAN PERFORMANCE AND CORRECTED AIR FLOW

PEAD-RP35EA2 PEAD-RP50EA

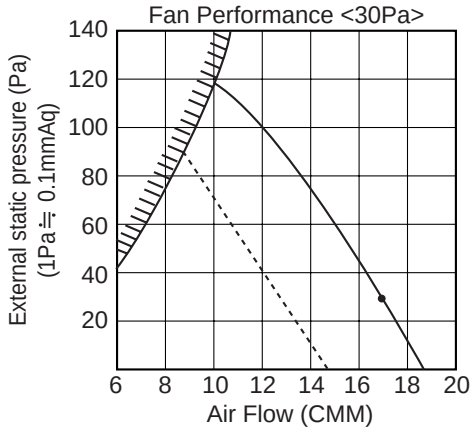

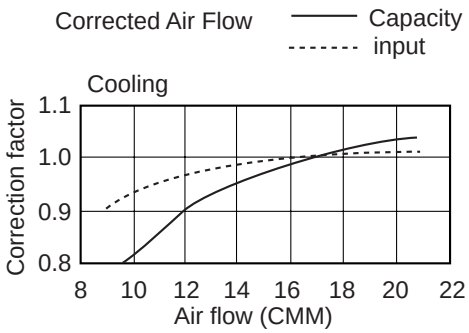

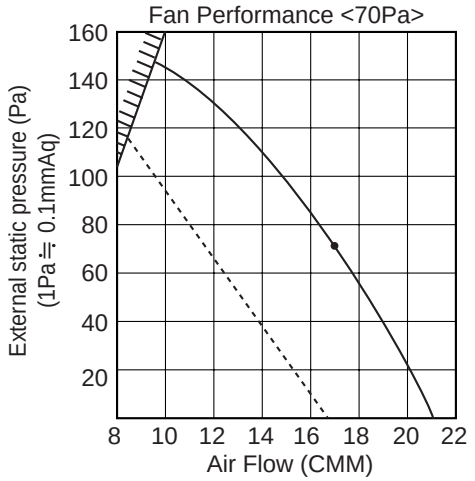

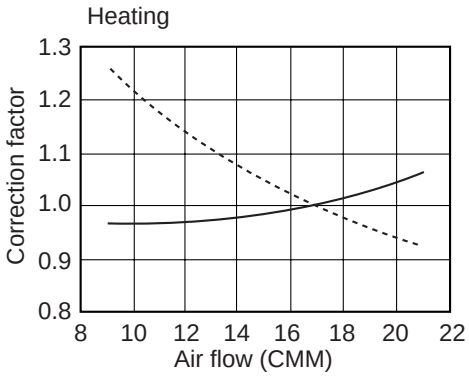

PEAD-RP60EA

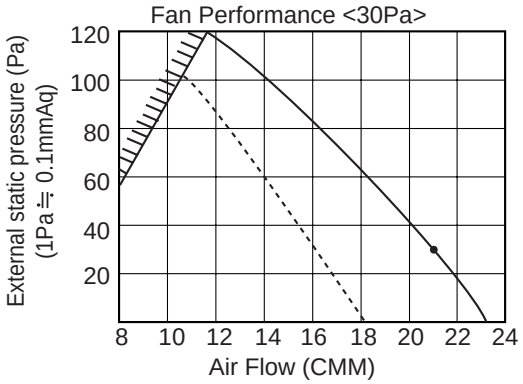

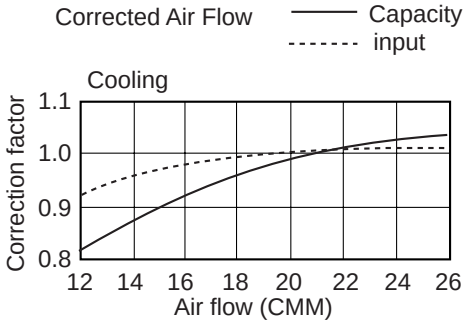

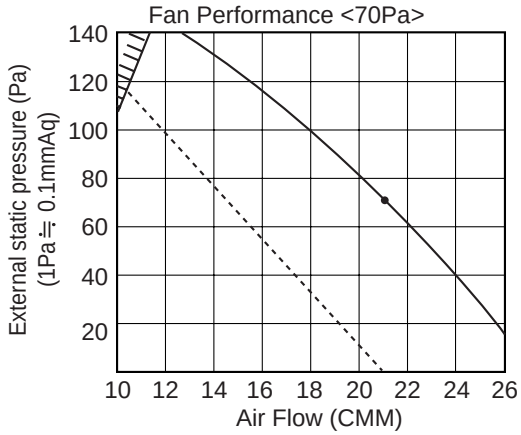

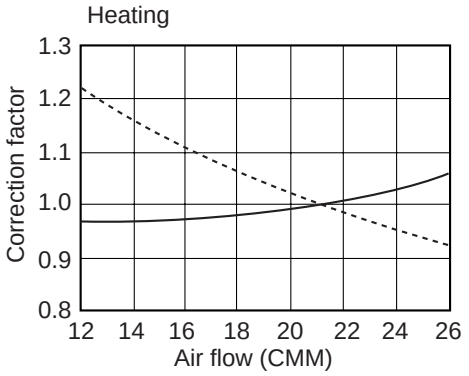

PEAD-RP71EA

Fan performance <130Pa>

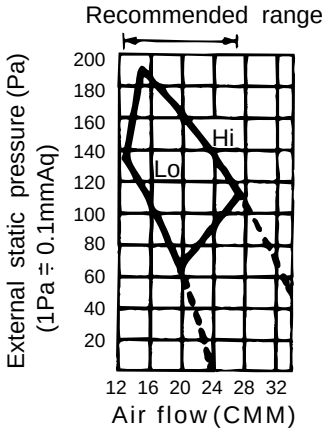

Fan performance <70Pa>

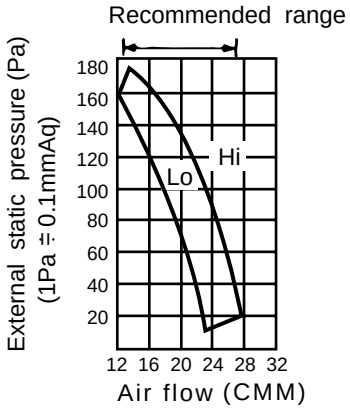

Corrected Air Flow

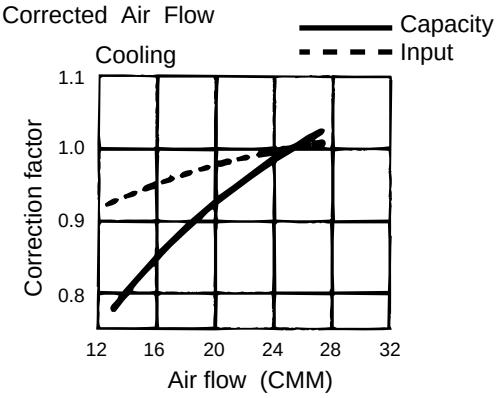

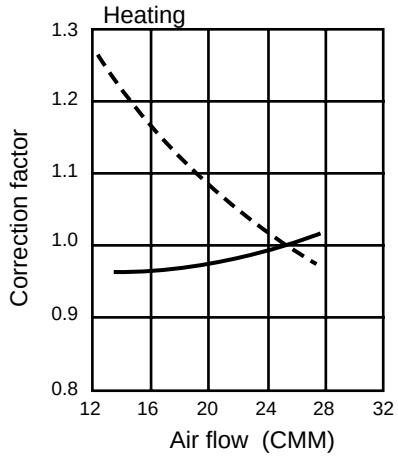

PEAD-RP100EA2 PEAD-RP125EA

Fan performance <130Pa>

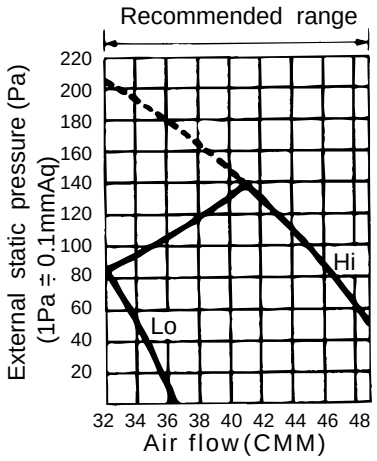

Fan performance <70Pa>

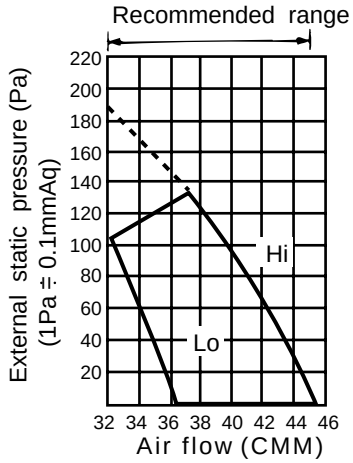

Corrected Air Flow

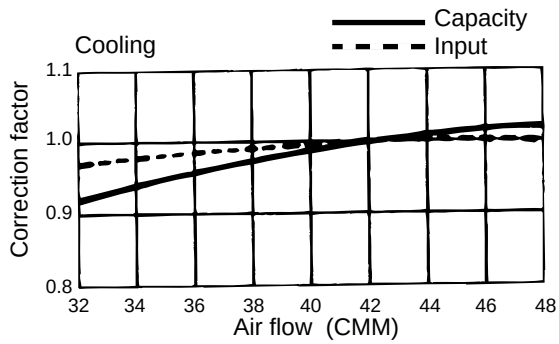

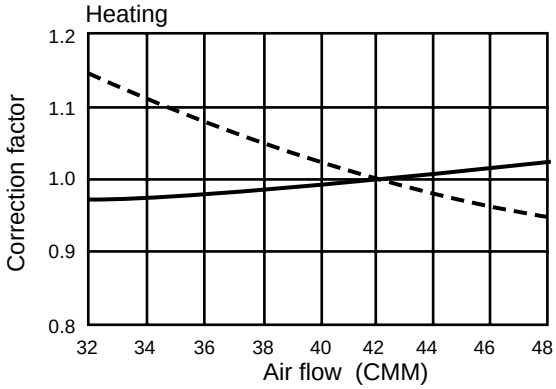

PEAD-RP140EA

Fan performance <130Pa>

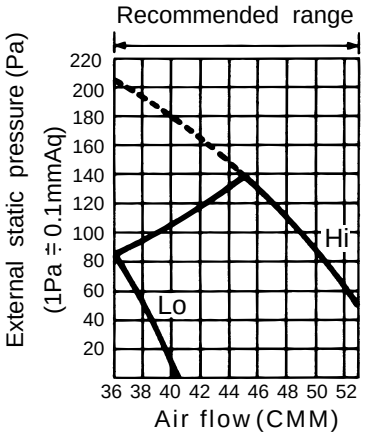

Fan performance <70Pa>

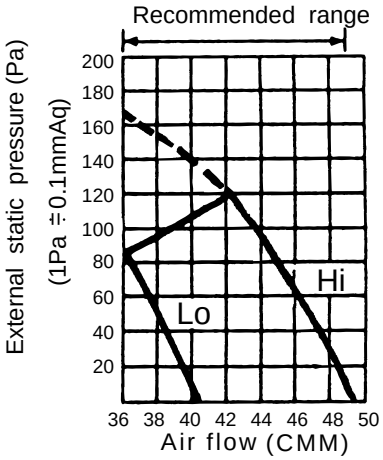

Corrected Air Flow

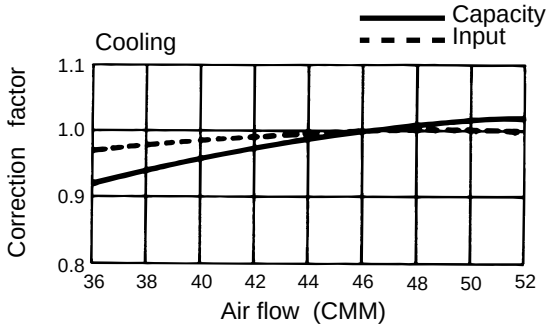

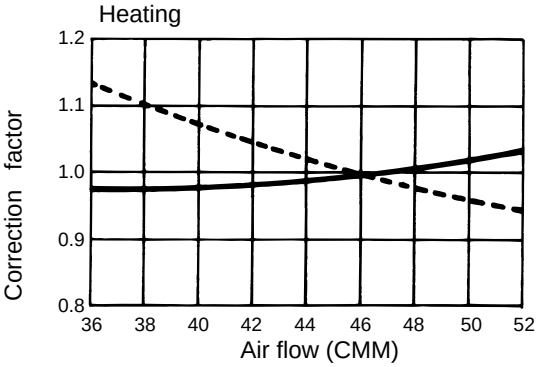

PEAD-RP60GA

Fan performance <220V>

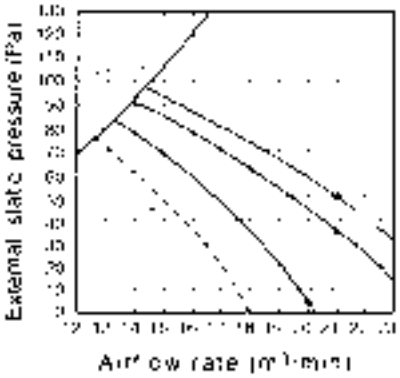

Fan performance <230V>

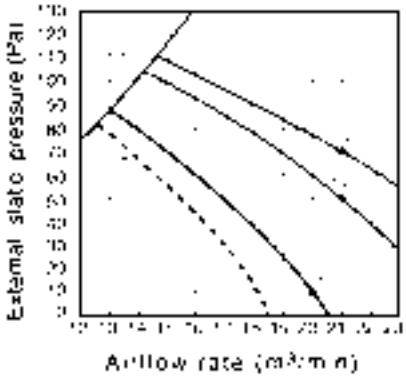

Fan performance <240V>

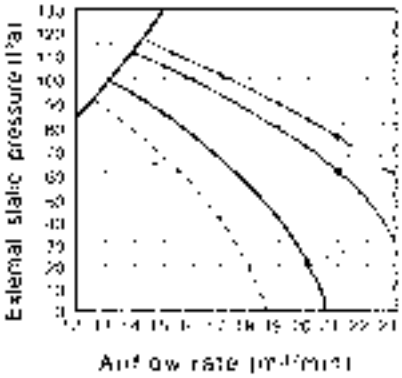

Corrected airflow

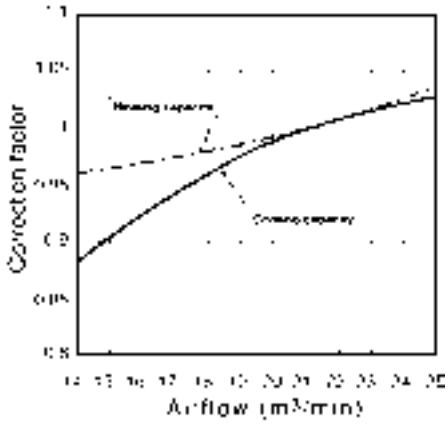

PEAD-RP71GA

Fan performance <220V>

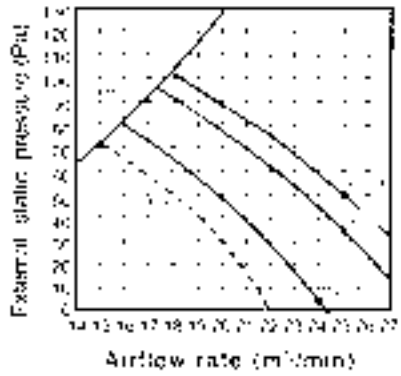

Fan performance <230V>

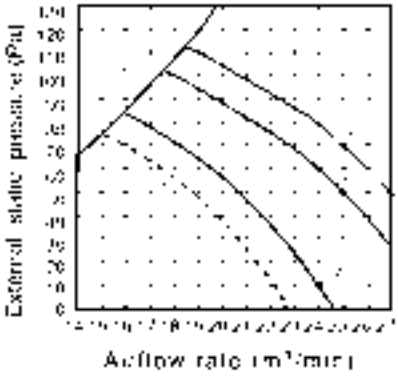

Fan performance <240V>

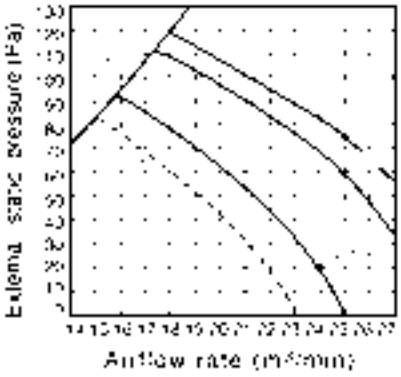

Corrected airflow

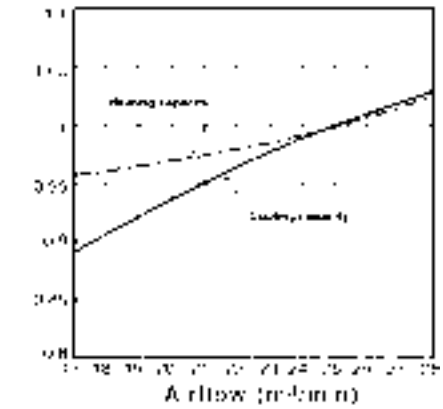

PEAD-RP100GA

Fan performance <220V>

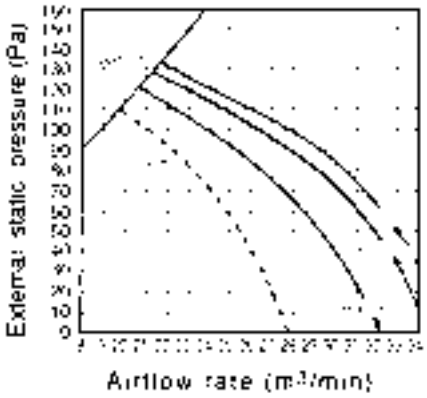

Fan performance <230V>

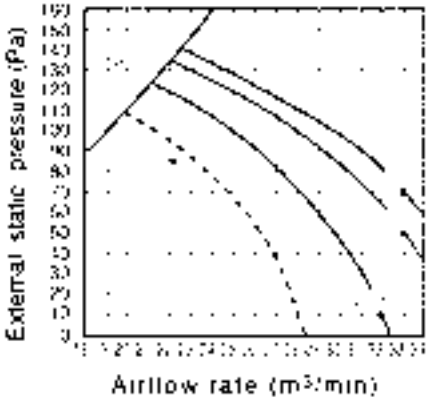

Fan performance <240V>

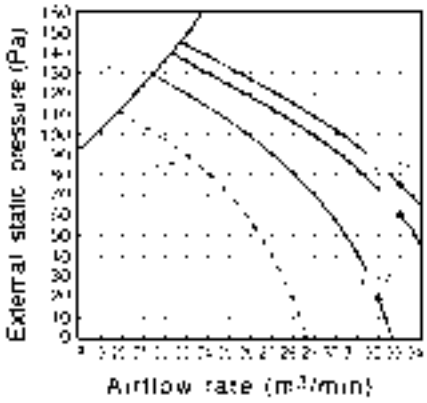

Corrected air flow

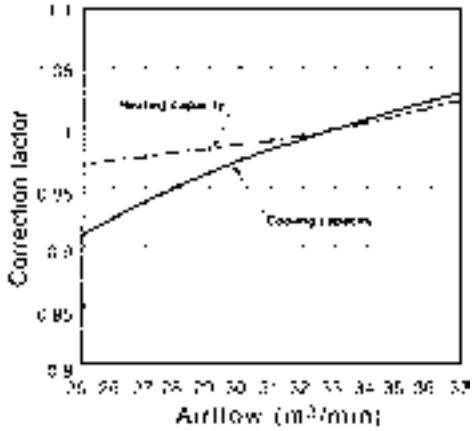

10 NOISE CRITERION CURVES

PLA-RP35AA

NOTCH	SPL(dB)	LINE
High	31	
Medium1	29	
Medium2	28	
Low	27	

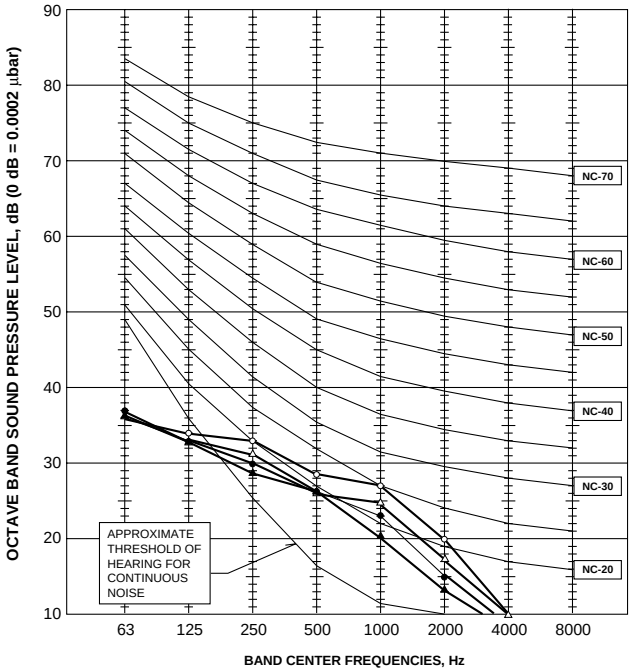

PLA-RP50AA
PLA-RP60AA

NOTCH	SPL(dB)	LINE
High	33	
Medium1	31	
Medium2	29	
Low	28	

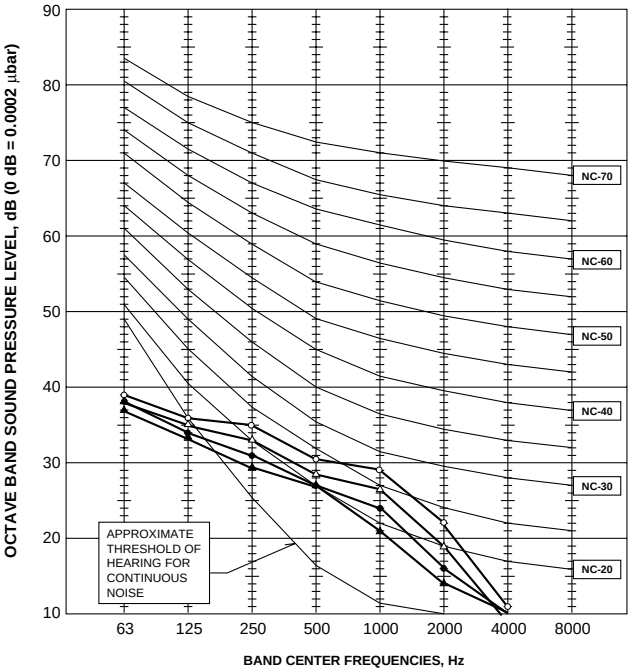

PLA-RP71AA

NOTCH	SPL(dB)	LINE
High	34	
Medium1	32	
Medium2	30	
Low	28	

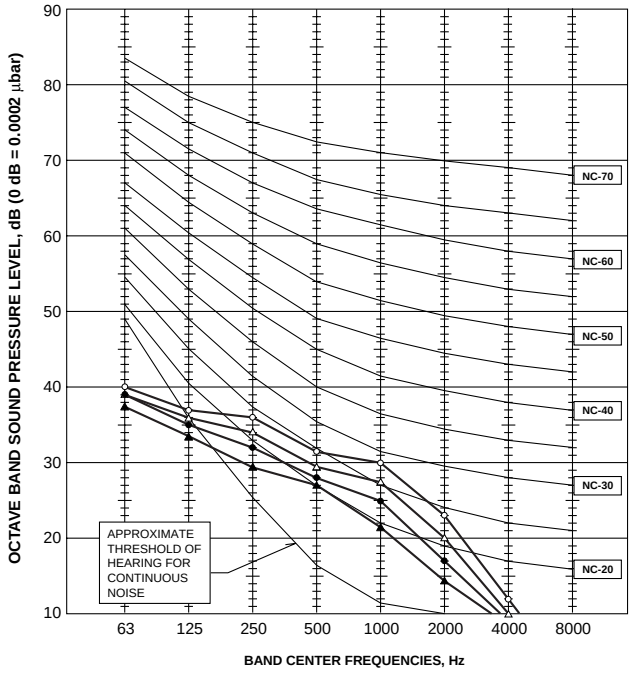

PLA-RP100AA2

NOTCH	SPL(dB)	LINE
High	41	
Medium1	39	
Medium2	36	
Low	33	

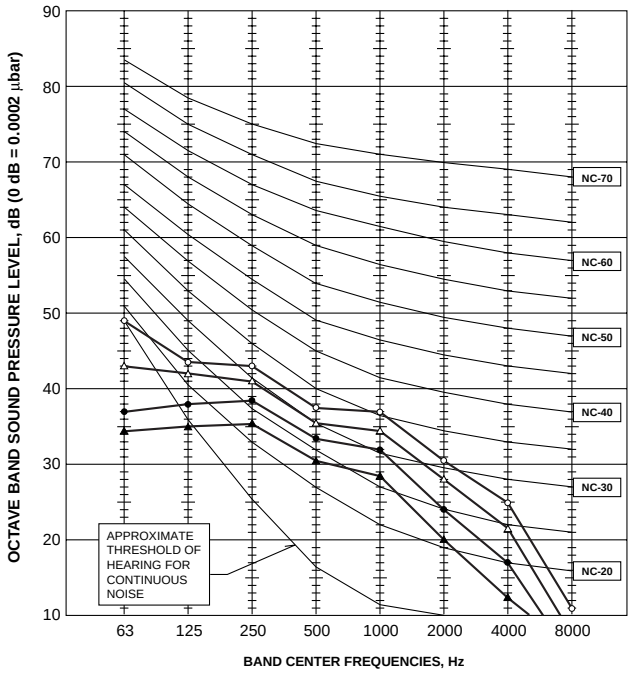

PLA-RP125AA2

NOTCH	SPL(dB)	LINE
High	45	
Medium1	43	
Medium2	40	
Low	37	

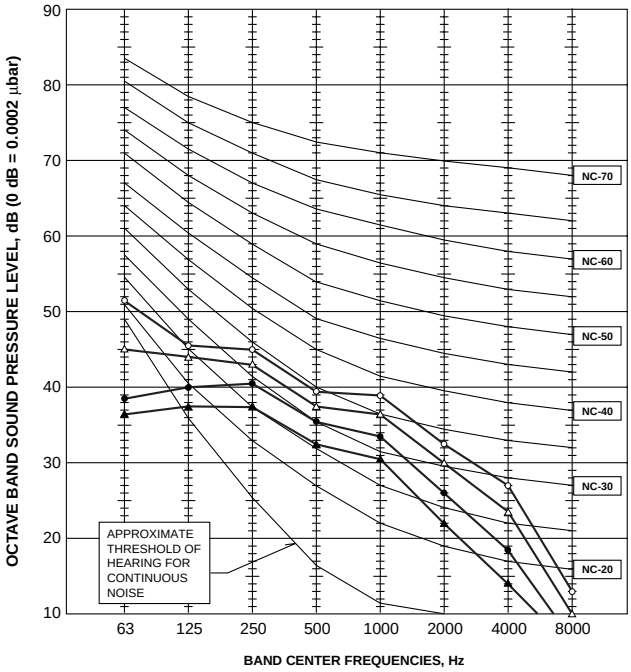

PLA-RP140AA2

NOTCH	SPL(dB)	LINE
High	45	
Medium1	43	
Medium2	40	
Low	37	

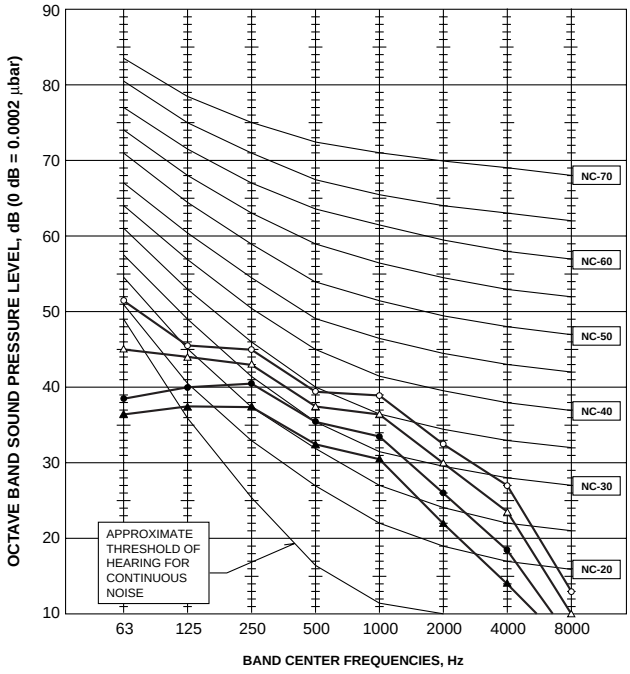

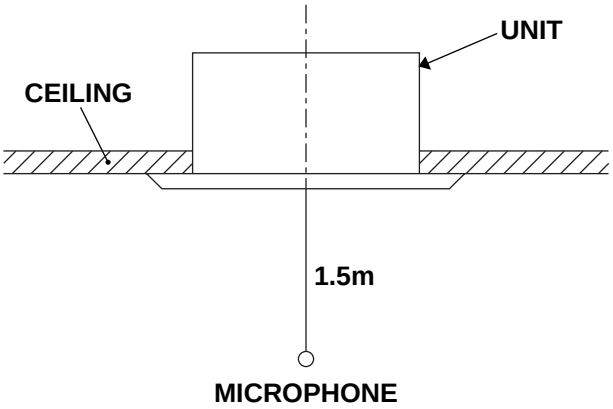

Ceiling concealed

Model	External static pressure		
	30Pa	70Pa	1[illegible]Pa
PEAD-RP35EA2	30-42	33-44	-
PEAD-RP50EA	36-43	38-44	
PEAD-RP60EA	37-41	39-47	
PEAD-RP71EA		37-47	42-45 ÷
PEAD-RP100EA2	-	44-50	46-52 ÷
PEAD-RP125EA		44-50	46-52 ÷
PEAD-RP140EA	-	46-57	47-53 ÷

÷ Optional motor

PEAD-RP35EA2
PEAD-RP50EA
(External static pressure 30Pa)

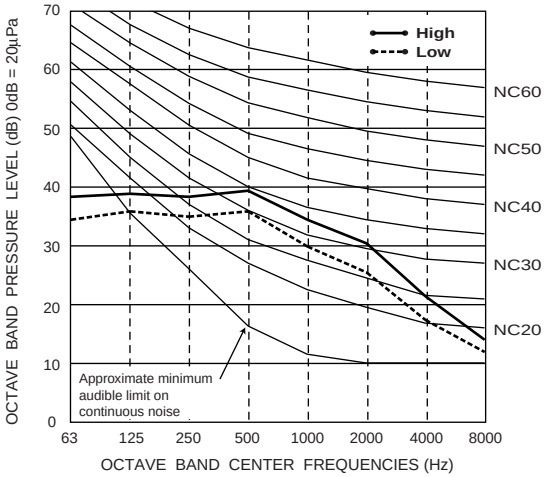

PEAD-RP35EA2
PEAD-RP50EA
(External static pressure 70Pa)

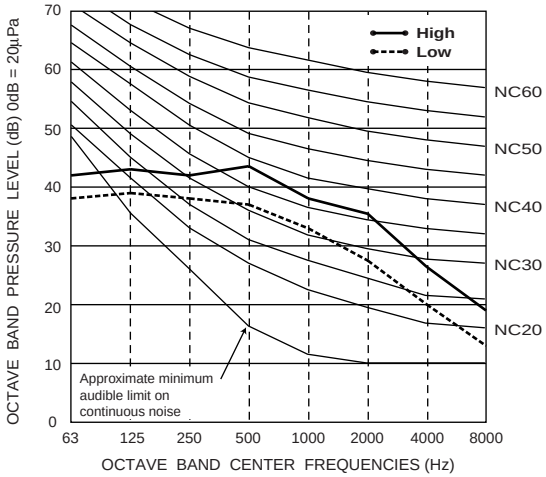

PEAD-RP60EA
(External static pressure 30Pa)

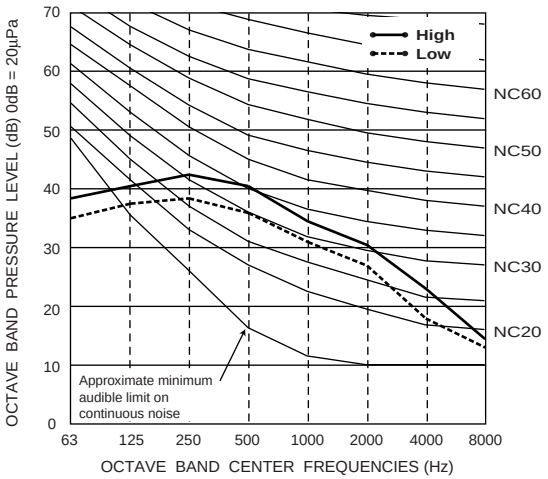

PEAD-RP60EA
(External static pressure 70Pa)

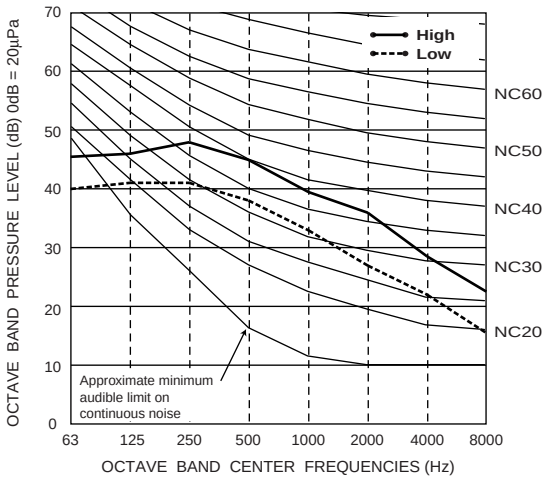

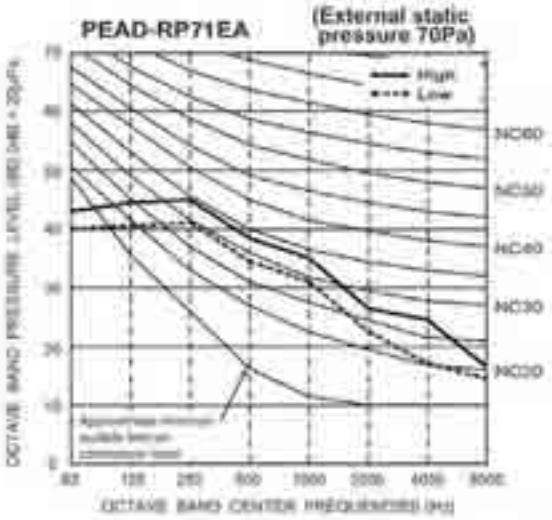
PEAD-RP71EA
(External static pressure 70Pa)
High
Low
NC60
NC50
NC40
NC30
NC20
OCTAVE BAND CENTER FREQUENCIES (Hz)

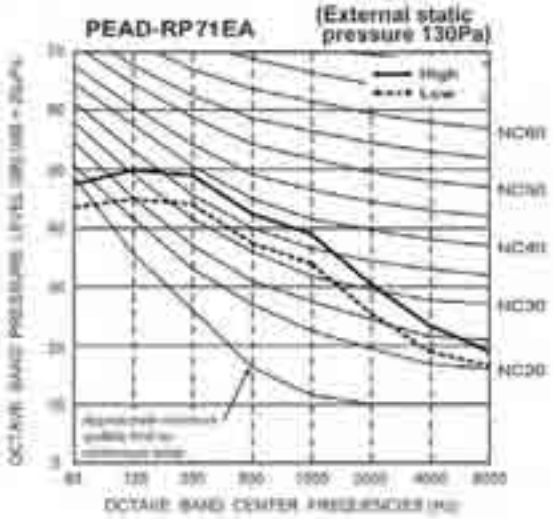
PEAD-RP71EA
(External static pressure 130Pa)
High
Low
NC60
NC50
NC40
NC30
NC20
OCTAVE BAND CENTER FREQUENCIES (Hz)

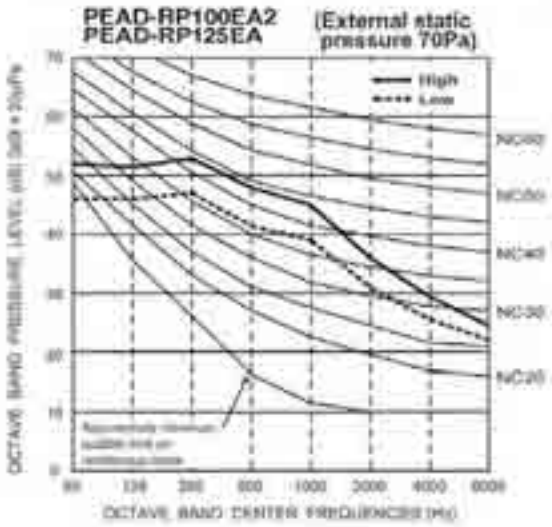
PEAD-RP100EA2
PEAD-RP125EA
(External static pressure 70Pa)
High
Low
NC60
NC50
NC40
NC30
NC20
OCTAVE BAND CENTER FREQUENCIES (Hz)

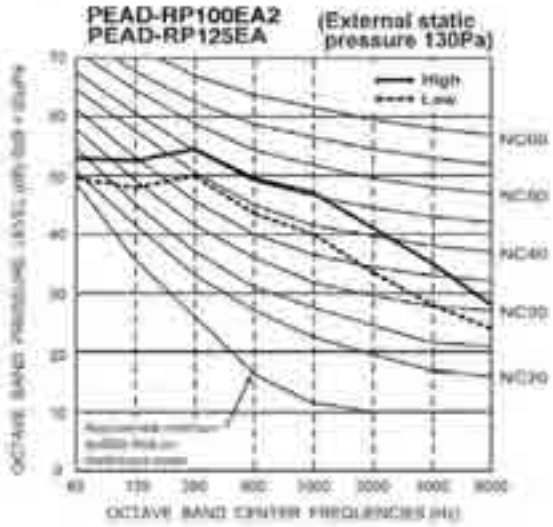
PEAD-RP100EA2
PEAD-RP125EA
(External static pressure 130Pa)
High
Low
NC60
NC50
NC40
NC30
NC20
OCTAVE BAND CENTER FREQUENCIES (Hz)

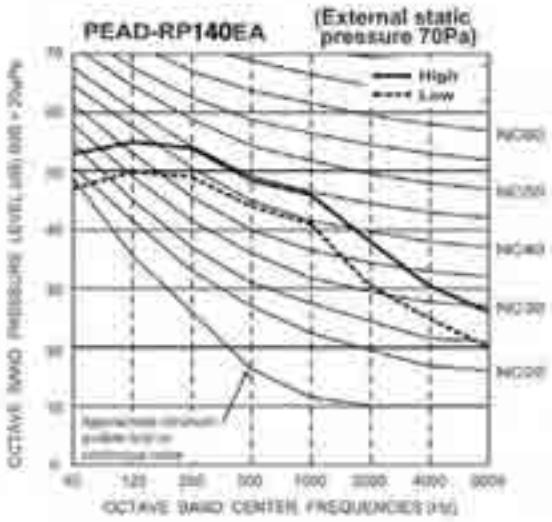
PEAD-RP140EA
(External static pressure 70Pa)
High
Low
NC60
NC50
NC40
NC30
NC20
OCTAVE BAND CENTER FREQUENCIES (Hz)

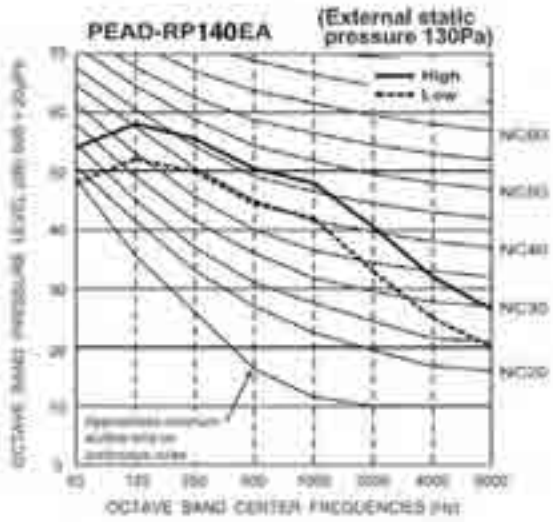
PEAD-RP140EA
(External static pressure 130Pa)
High
Low
NC60
NC50
NC40
NC30
NC20
OCTAVE BAND CENTER FREQUENCIES (Hz)

PKA-RP35GAL
PKA-RP50GAL

NOTCH	SPL(dB)	LINE
High	43	○——○
Medium1	41	△——△
Medium2	38	●——●
Low	36	▲——▲

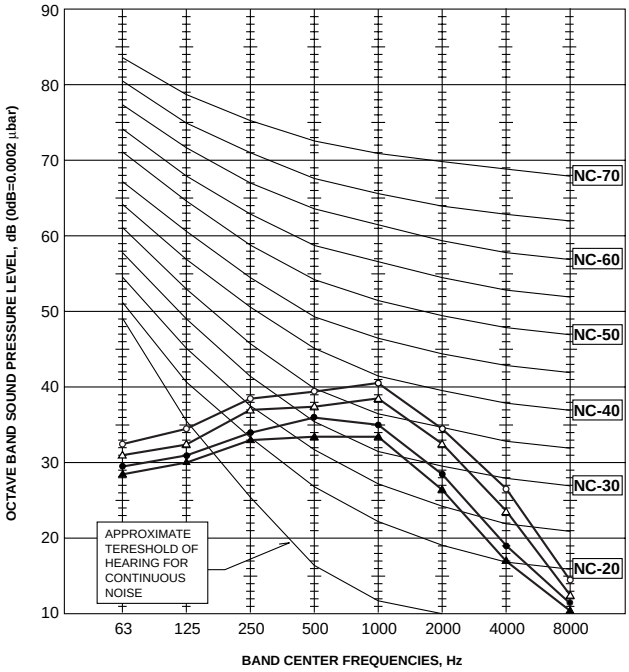

PKA-RP50FAL2
PKA-RP60FAL
PKA-RP71FAL

NOTCH	SPL(dB)	LINE
High	45	○——○
Low	39	●——●

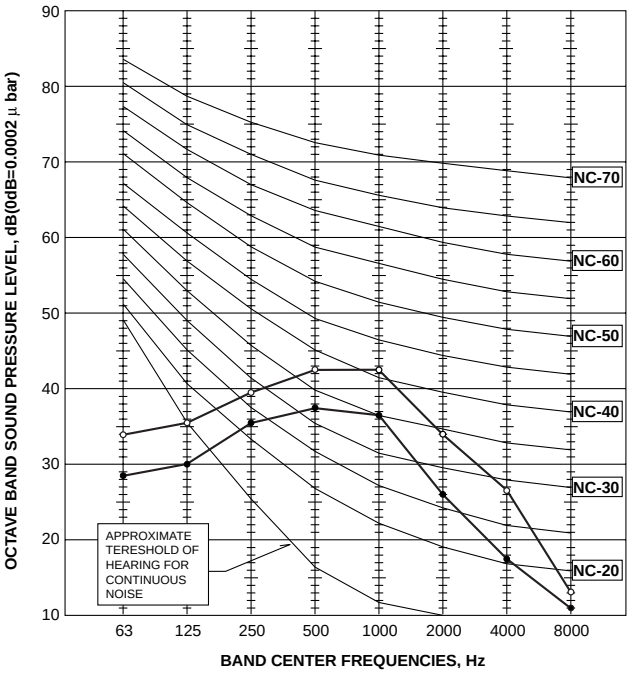

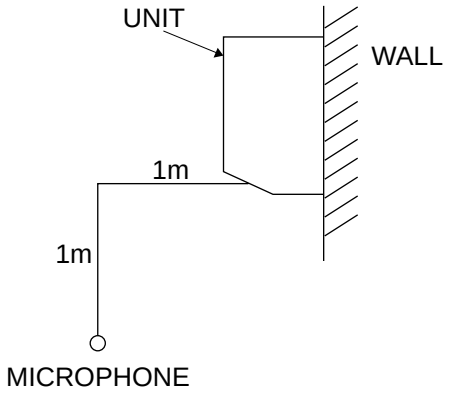

PKA-RP100FAL

NOTCH	SPL(dB)	LINE
High	46	○——○
Low	41	●——●

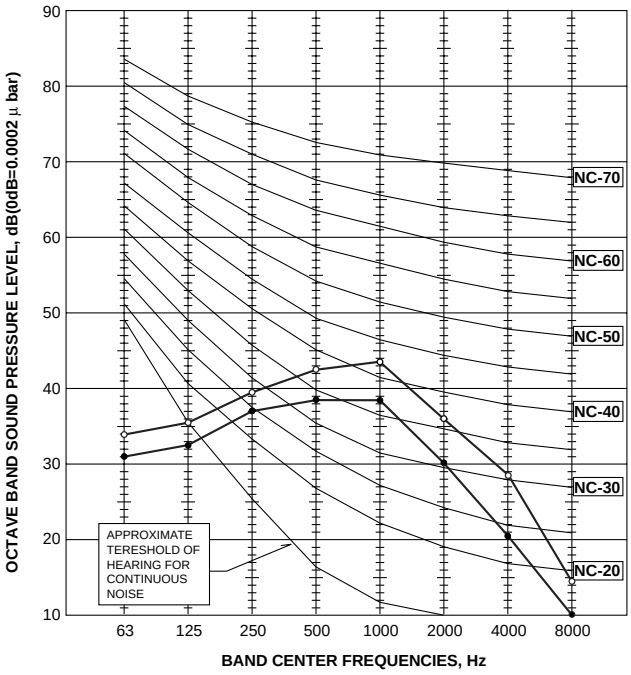

PCA-RP50GA

NOTCH	SPL(dB)	LINE
High	42	○——○
Medium1	40	△——△
Medium2	38	●——●
Low	37	▲——▲

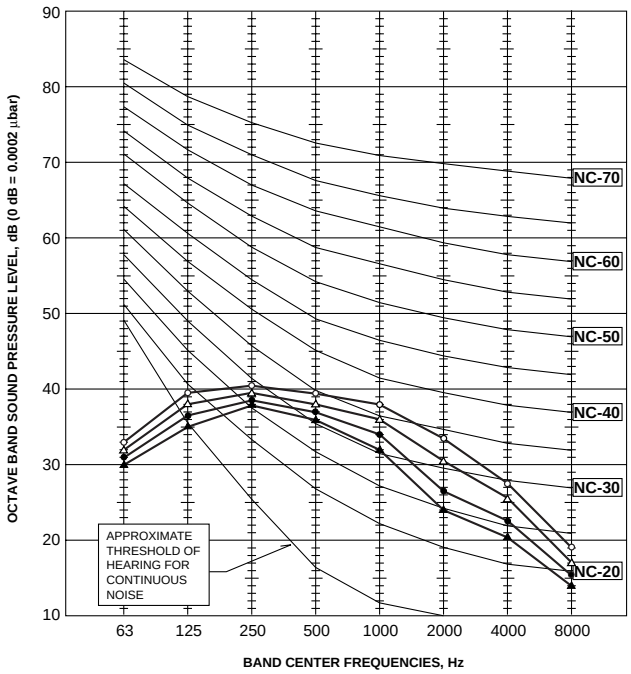

PCA-RP50GA2
PCA-RP60GA
PCA-RP71GA

NOTCH	SPL(dB)	LINE
High	43	○——○
Medium1	41	△——△
Medium2	39	●——●
Low	37	▲——▲

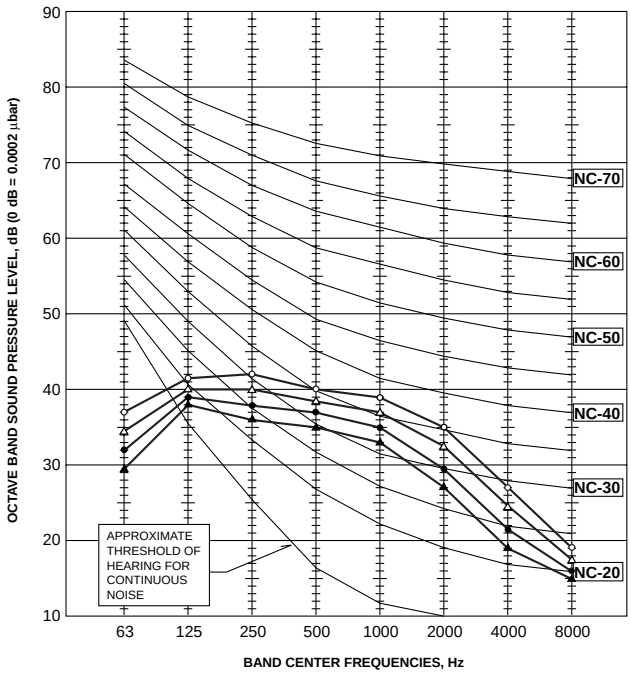

PCA-RP100GA

NOTCH	SPL(dB)	LINE
High	45	○——○
Medium1	43	△——△
Medium2	41	●——●
Low	40	▲——▲

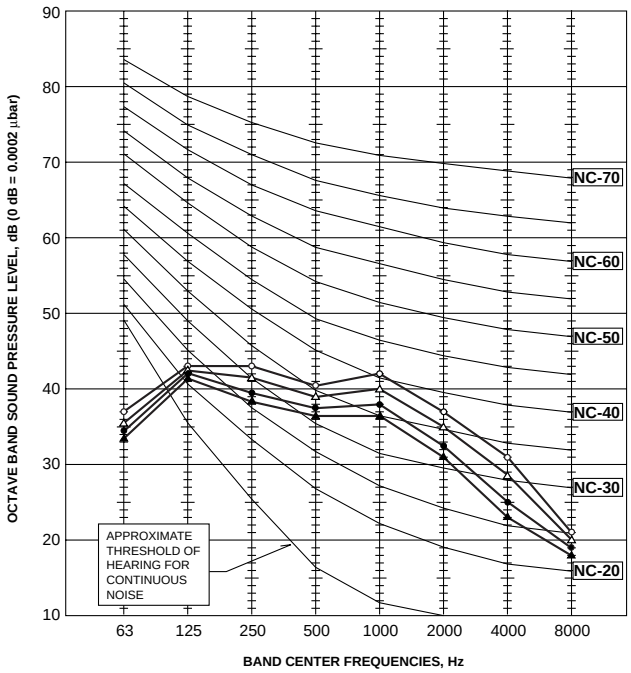

PCA-RP125GA

NOTCH	SPL(dB)	LINE
High	46	○——○
Medium1	45	△——△
Medium2	43	●——●
Low	41	▲——▲

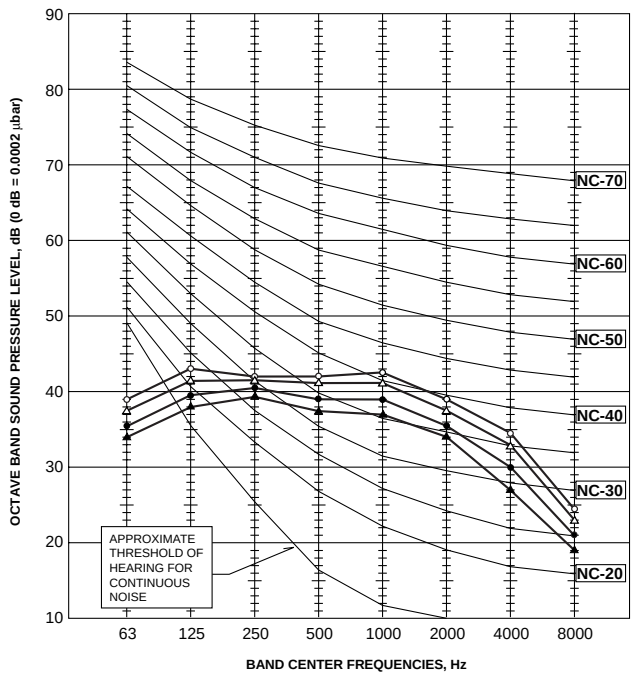

PCA-RP140GA

NOTCH	SPL(dB)	LINE
High	48	○——○
Medium1	46	△——△
Medium2	44	●——●
Low	42	▲——▲

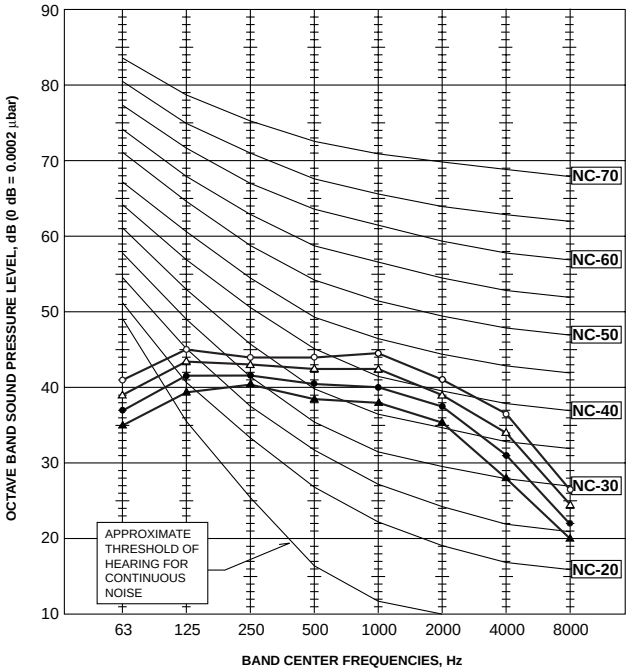

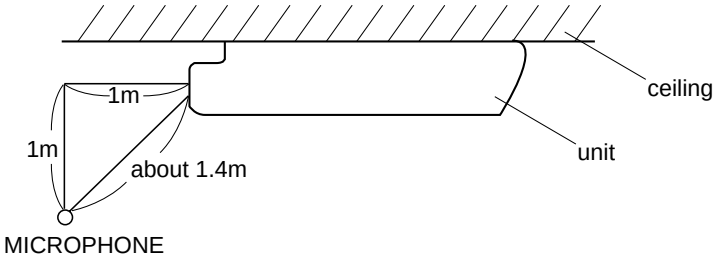

PCA-RP71HA

NOTCH	SPL(dB)	LINE
High	38	○——○
Low	34	●——●

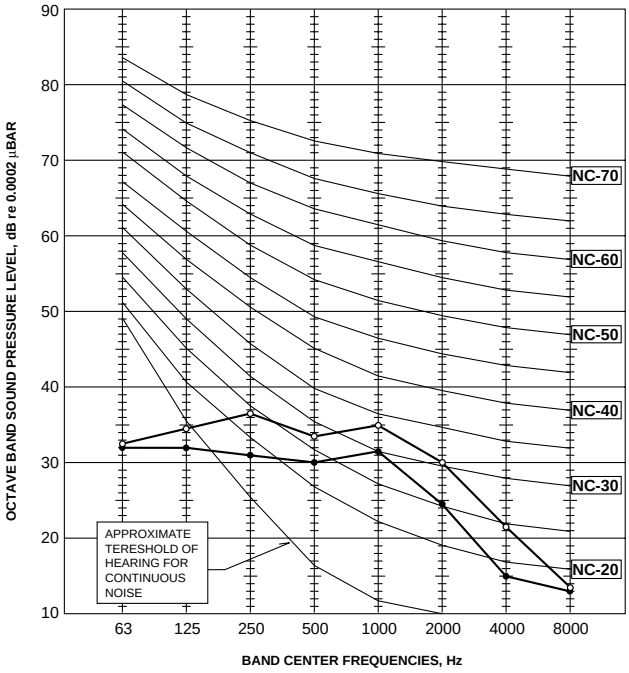

PCA-RP125HA

NOTCH	SPL(dB)	LINE
High	50	○——○
Low	44	●——●

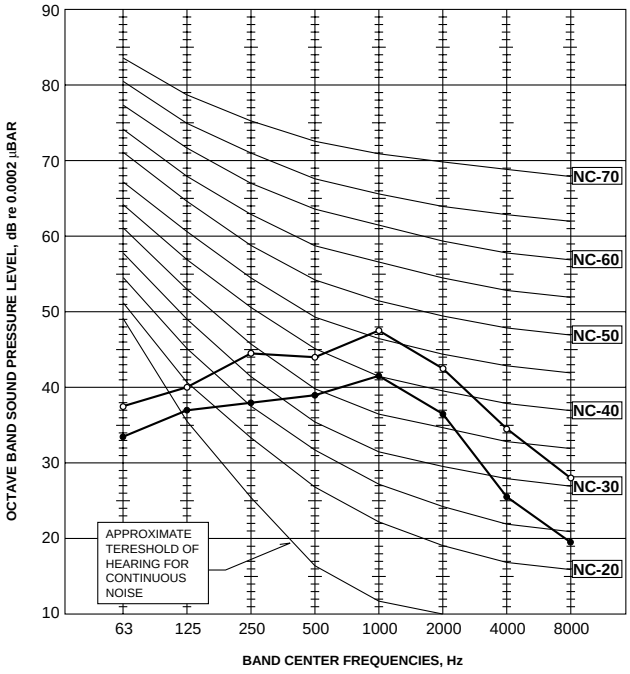

PSA-RP71GA

NOTCH	SPL(dB)	LINE
High	45	○——○
Low	40	●——●

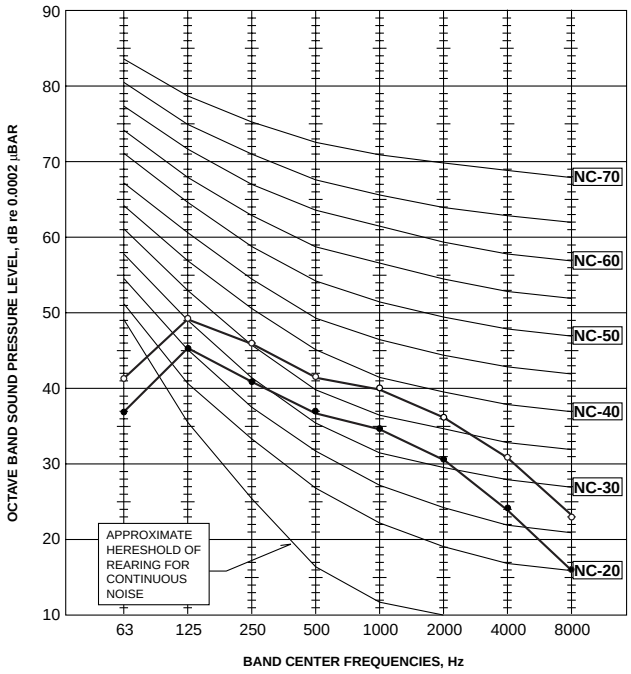

PSA-RP100GA

NOTCH	SPL(dB)	LINE
High	49	○——○
Low	44	●——●

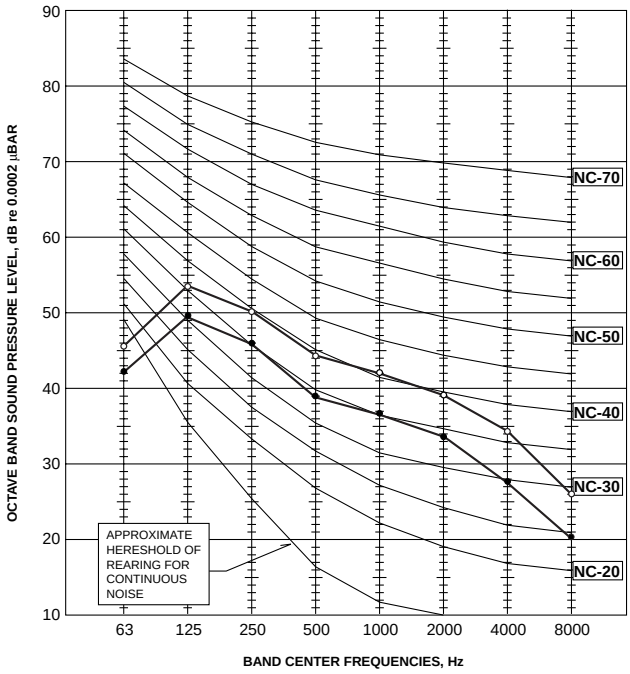

PSA-RP125GA

NOTCH	SPL(dB)	LINE
High	51	○——○
Low	46	●——●

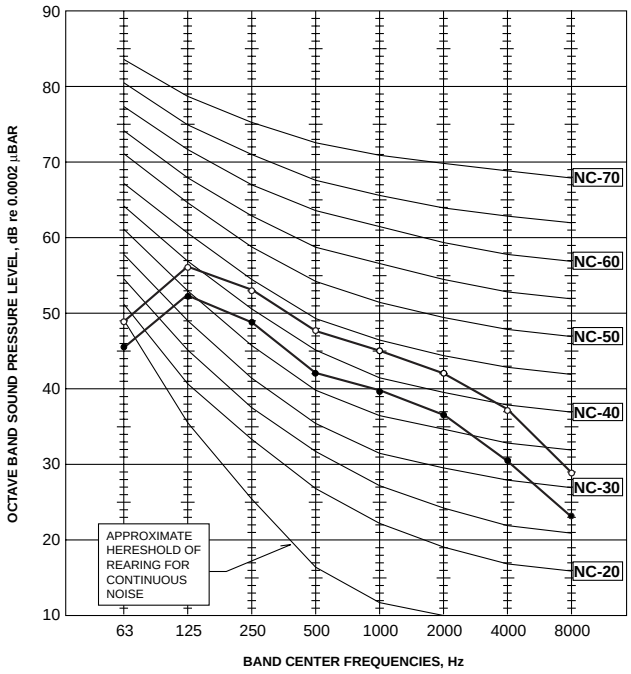

PSA-RP140GA

NOTCH	SPL(dB)	LINE
High	52	○——○
Low	47	●——●

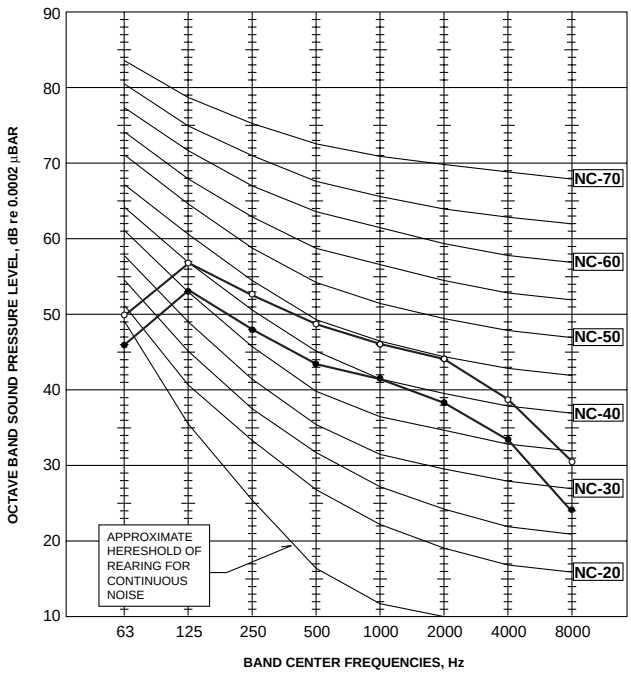

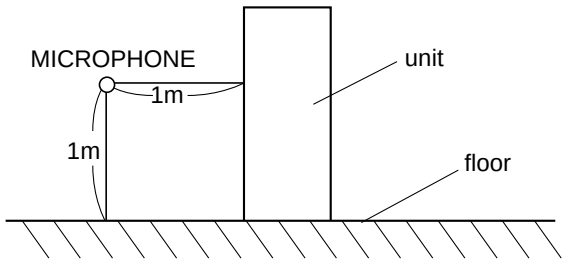

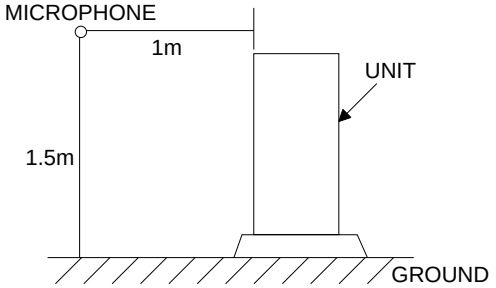

PUHZ-RP35VHA2
PUHZ-RP50VHA2

MODE	SPL(dB)	LINE
COOLING	44	○——○
HEATING	46	●——●

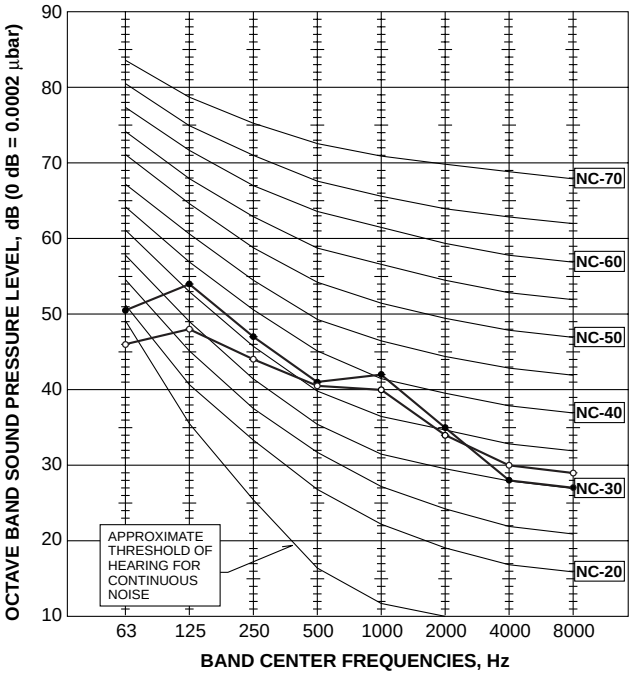

PUHZ-RP60VHA2
PUHZ-RP71VHA2

MODE	SPL(dB)	LINE
COOLING	47	○——○
HEATING	48	●——●

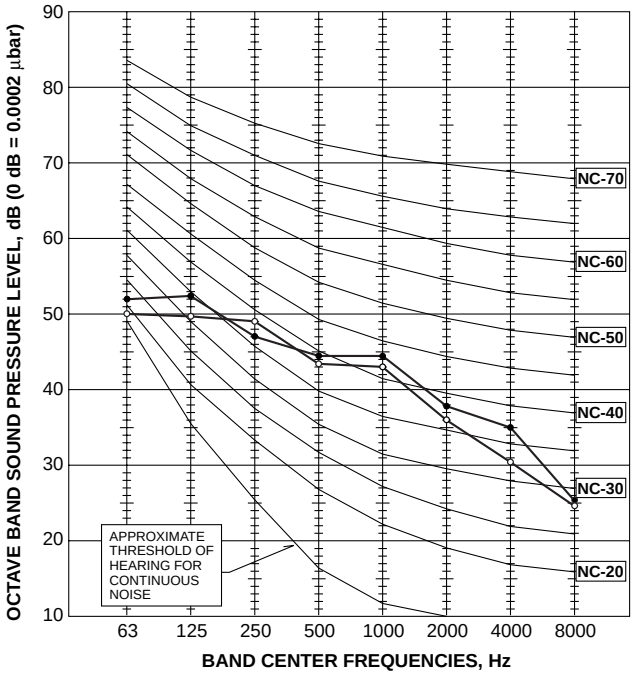

PUHZ-RP100VHA2
PUHZ-RP100YHA2

MODE	SPL(dB)	LINE
COOLING	49	○——○
HEATING	51	●——●

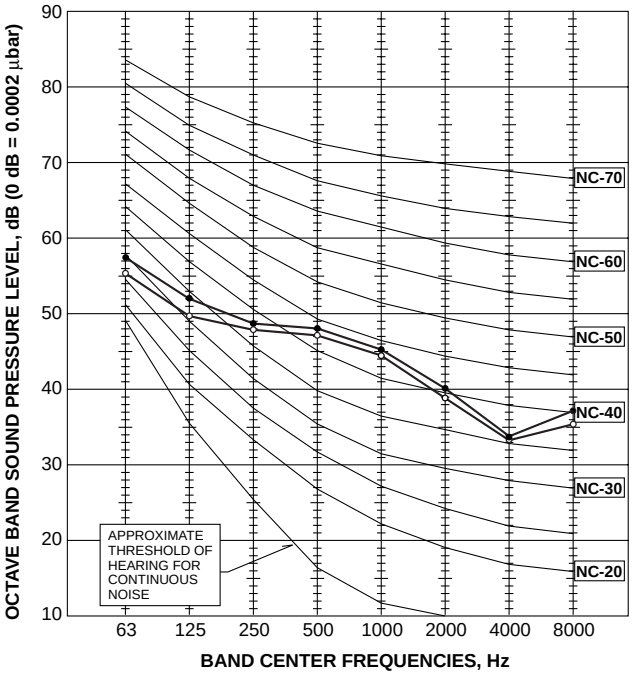

PUHZ-RP125VHA2
PUHZ-RP140VHA2
PUHZ-RP125YHA2
PUHZ-RP140YHA2

MODE	SPL(dB)	LINE
COOLING	50	○——○
HEATING	52	●——●

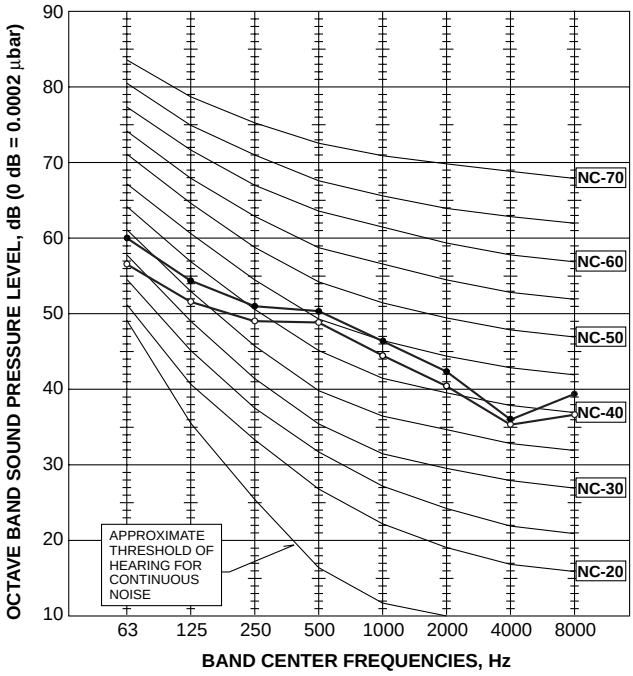

11 OPTIONAL PARTS

11-1. INDOOR UNIT

Part Name		Model Name	Applicable model
Remote sensor		PAC-SE41TS-E	All models
Remote operation adapter		PAC-SF40RM-E	
Multiple remote controller adapter		PAC-SA88HA-E (1pc.)	
		PAC-725AD (10pcs.)	
Remote on/off adapter		PAC-SE55RA-E	
Power supply terminal kit	L/N/Earth	PAC-SG96HR-E	All models except PCA-RP·HA and PEAD-RP·GA
	L/N	PAC-SG97HR-E	PCA-RP·HA PEAD-RP·GA
Multi-functional casement		PAC-SG03TM-E	PLA-RP·AA PLA-RP·AA2
High-efficiency filter element (PAC-SG03TM-E is needed.)		PAC-SG01KF	
Grille + Wireless remote controller		PLP-6AALM	
Grille + Wired remote controller		PLP-6AAMD	
Space panel		PAC-SG04AS-E	
Air outlet shutter plate (20 set, 2pcs/set)		PAC-SG06SP-E	
Wireless remote controller + Wireless Adapter		PAR-SL99B-E	PCA-RP·GA(2)
Drain lift up mechanism		PAC-SH20DM-E	PCA-RP50,60GA(2)
		PAC-SH21DM-E	PCA-RP71GA
		PAC-SH22DM-E	PCA-RP100,125,140GA
High-efficiency filter		PAC-SE80KF-E	PCA-RP50GA
		PAC-SE81KF-E	PCA-RP60,71,100GA,50GA2
		PAC-SE82KF-E	PCA-RP125,140GA
Duct flange for fresh air		PAC-SF28OF-E	PCA-RP·HA
Oil mist filter element (12pcs)		PAC-SG38KF-E	
Decoration cover (Front + Suspending bracket cover)		PAC-SF81KC-E	PCA-RP71HA
		PAC-SF82KC-E	PCA-RP125HA
Wired remote controller (with terminal bed)		PAR-21MAAT-E	PKA-RP·GAL
			PKA-RP·FAL(2)
Drain lift up mechanism		PAC-SE90DM-E	PKA-RP·FAL(2)
Motor (for high external static pressure)		PAC-SK003MT-F	PEAD-RP125,140EA
			PEAD-RP100EA2
Drain lift up mechanism		PAC-KE03DM-F	PEAD-RP·EA,EA2
Insulation kit		PAC-SK010DK	PEAD-RP·GA

11-2. OUTDOOR UNIT

Part Name		Model Name	Applicable model
M-NET adapter		PAC-SF80MA-E	All models
A-control service tool		PAC-SK52ST	
Drain socket		PAC-SG61DS-E	PUHZ-RP35-140
Air outlet guide		PAC-SG58SG-E	PUHZ-RP35, 50
(RP100,125,140 needs two piece.)		PAC-SG59SG-E	PUHZ-RP60-140
Air protect guide		PAC-SG56AG-E	PUHZ-RP35, 50
		PAC-SH63AG-E	PUHZ-RP60-140
Drain pan		PAC-SG63DP-E	PUHZ-RP35, 50
		PAC-SG64DP-E	PUHZ-RP60-140
Filter dryer	(φ6.35)	PAC-SG81DR-E	PUHZ-RP35, 50
	(φ9.52)	PAC-SG82DR-E	PUHZ-RP60-140
Distribution pipe	(Twin)	MSDD-50SR-E	PUHZ-RP100-140
	(Triple)	MSDT-111R-E	PUHZ-RP140
Joint pipe	(φ6.35 → φ9.52)	PAC-SG72RJ-E	PUHZ-RP35, 50
(Unit → Extension pipe)	(φ9.52 → φ12.7)	PAC-SG73RJ-E	PUHZ-RP35, 50
	(φ15.88 → φ19.05)	PAC-SG75RJ-E	PUHZ-RP60-140

MITSUBISHI ELECTRIC CORPORATION
HEAD OFFICE : TOKYO BLDG., 2-7-3, MARUNOUCHI, CHIYODA-KU, TOKYO 100-8310, JAPAN

©Copyright 2006 MITSUBISHI ELECTRIC ENGINEERING CO., LTD.
Distributed in Jul. 2006 No.OCS05 REVISED EDITION-B PDF 7
Distributed in May 2006 No.OCS05 REVISED EDITION-A PDF 8
Distributed in Feb. 2006 No.OCS05 PDF 8
Made in Japan.

New publication, effective Jul. 2006.
Specifications subject to change without notice.