MITSUBISHI ELECTRIC

Changes for the Better

SPLIT-TYPE, HEAT PUMP AIR CONDITIONERS

May 2005

No. OCS01

TECHNICAL DATA BOOK R410A INVERTER

<Indoor unit>

[Model names]

PLA-RP·AA
PEAD-RP·EA
PEAD-RP·GA
PEA-RP·EA
PEH-RP·MYA
PKA-RP·GAL
PKA-RP·FAL
PCA-RP·GA
PCA-RP·HA
PSA-RP·GA

<Outdoor unit>

[Model names]

PUHZ-RP35/50/60/71/100/125/140VHA
PUHZ-RP100/125/140/200/250YHA

CONTENTS

1. REFERENCE SERVICE MANUAL ····· 2
2. SPECIFICATIONS ····· 3
3. OUTLINES AND DIMENSIONS ····· 26
4. WIRING DIAGRAM ····· 52
5. REFRIGERANT SYSTEM DIAGRAM ····· 66
6. PERFORMANCE CURVES ····· 69
7. CORRECTION FACTORS ····· 73
8. APPLICABLE EXTENSION PIPE FOR EACH MODEL ····· 74
9. AIR FLOW DATA ····· 82
10. NOISE CRITERION CURVES ····· 100
11. OPTIONAL PARTS ····· 116

kW Model

Mr.SLIM™

1 REFERENCE SERVICE MANUAL

For information on service, please refer to the service manual as follows.

1-1. INDOOR UNIT

Model name	Service Ref.	Service Manual No.
PLA-RP35/50/60/71AA PLA-RP100/125/140AA	PLA-RP35/50/60/71AA.UK PLA-RP100/125/140AA.UK	OC335
	PLA-RP35/50/60/71AA PLA-RP100/125/140AA.UK	OC327
PCA-RP50/60/71GA PCA-RP100/125/140GA	PCA-RP50/60/71GA PCA-RP100/125/140GA	OC328
PCA-RP71/125HA	PCA-RP71/125HA	OC329
PKA-RP35/50GAL	PKA-RP35/50GAL	OC330
PKA-RP60/71/100FAL	PKA-RP60/71/100FAL	OC331
PSA-RP71/100/125/140GA	PSA-RP71/100/125/140GA	OC332
PEA-RP71/100/125/140EA	PEA-RP71/100/125/140EA.TH-A	OC326
PEAD-RP35/50/60/71EA PEAD-RP100/125/140EA	PEAD-RP35/50/60/71EA.UK PEAD-RP100/125/140EA.UK	-
PEAD-RP60/71/100GA	PEAD-RP60/71/100GA.UK	-
PEH-RP200/250MYA	PEH-RP200/250MYA	-

1-2. OUTDOOR UNIT

Model name	Service Ref.	Service Manual No.
PUHZ-RP35/50/60/71VHA PUHZ-RP100/125/140VHA PUHZ-RP100/125/140YHA	PUHZ-RP35/50/60/71VHA PUHZ-RP100/125/140VHA PUHZ-RP100/125/140YHA	OC334
PUHZ-RP100/125/140VHA	PUHZ-RP71/100/125/140VHA-A	OC337
PUHZ-RP200/250YHA	PUHZ-RP200/250YHA	OC338
	PUHZ-RP200/250YHA-A	OC339

2 SPECIFICATIONS

2-1. CEILING CASSETTE TYPE

Model name	Indoor unit		PLA-RP35AA	PLA-RP50AA
	Outdoor unit		PUHZ-RP35VHA	PUHZ-RP50VHA
Cooling	Capacity	Btu/h	12,300	17,100
		kW	3.6(1.6-4.5)	5.0(2.3-5.6)
	Total input	kW	1.07	1.55
	EER		3.36	3.23
	Energy label class		A	A
	SHF		0.89	0.86
Heating	Capacity	Btu/h	14,000	20,500
		kW	4.1(1.6-5.2)	6.0(2.5-7.3)
	Total input	kW	1.12	1.62
	COP		3.66	3.70
	Energy label class		A	A
	Booster heater	kW	-	-
Power supply	Phase	ϕ	1	
	Cycle	Hz	50	
	Voltage	V	230	
	Breaker size	A	16	
Indoor unit	Air flow	CMM	11-12-13-14	14-15-16-18
	(Low-Medium2-Medium1-High)	CFM	390-425-460-495	495-530-565-635
	External pressure	Pa	0	0
	Sound level (Low-Medium2-Medium1-High)	dB(A)	27-28-29-31	28-29-31-33
	External finish (Panel)		White Munsell 0.70Y 8.59/0.97	
	Dimension Unit (Panel)	W : mm	840 (950)	
		D : mm	840 (950)	
		H : mm	258 (30)	
		W : inch	33-1/16 (37-3/8)	
		D : inch	33-1/16 (37-3/8)	
		H : inch	10-3/16 (1-3/16)	
	Weight Unit (Panel)	kg	24 (5)	
		lbs	53 (11)	
	Unit drain pipe I.D.	mm	32	
		inch	1-1/4	
Outdoor unit	Air flow	CMM	35	
		CFM	1,240	
	Sound level at cooling	dB(A)	44	
	Sound level at heating	dB(A)	46	
	External finish		Ivory Munsell 3Y 7.8/1.1	
	Dimension	W : mm	800	
		D : mm	330+23	
		H : mm	600	
		W : inch	31-1/2	
		D : inch	13 + 7/8	
		H : inch	23-5/8	
	Weight	kg	45	
		lbs	99	
Refrigerant pipe size	Gas side O.D.	mm	12.7	
		inch	1/2	
	Liquid side O.D.	mm	6.35	
		inch	1/4	
Refrigerant pipe length	Height difference	m	Max. 30	
	Length	m	Max. 50	

NOTE: 1. Rating conditions (ISO T1)
Cooling Indoor : D.B. 27℃ (80˚F) W.B. 19℃ (66˚F) Outdoor : D.B. 35℃ (95˚F) W.B. 24℃ (75˚F)
Heating Indoor : D.B. 20℃ (68˚F) Outdoor : D.B. 7℃ (45˚F) W.B. 6℃ (43˚F)
Refrigerant piping length (one way) : 5m (16ft.)

2. Guaranteed operating range

		Indoor	Outdoor
Cooling	Upper limit	D.B. 35˚C, W.B. 22.5˚C	D.B. 46˚C
	Lower limit	D.B. 19˚C, W.B. 15˚C	D.B. -5˚C ※
Heating	Upper limit	D.B. 28˚C	D.B. 21˚C, W.B. 15˚C
	Lower limit	D.B. 17˚C	D.B. -11˚C, W.B. -12˚C

3. Guaranteed voltage
198~264V, 50Hz

4. Above data based on indicated voltage
Indoor unit Single phase 230V 50Hz
Outdoor unit Single phase 230V 50Hz

※ If optional Air protect guide installed. D.B.-15℃

Model name	Indoor unit		PLA-RP60AA	PLA-RP71AA
	Outdoor unit		PUHZ-RP60VHA	PUHZ-RP71VHA
Cooling	Capacity	Btu/h	20,500	24,200
		kW	6.0(2.7-6.7)	7.1(3.3-8.1)
	Total input	kW	1.65	1.97
	EER		3.64	3.60
	Energy label class		A	A
	SHF		0.78	0.74
Heating	Capacity	Btu/h	23,900	27,300
		kW	7.0(2.8-8.2)	8.0(3.5-10.2)
	Total input	kW	1.85	2.34
	COP		3.78	3.42
	Energy label class		A	B
	Booster heater	kW	-	-
Power supply	Phase	ϕ	1	
	Cycle	Hz	50	
	Voltage	V	230	
	Breaker size	A	25	
Indoor unit	Air flow	CMM	14-15-16-18	15-16-18-20
	(Low-Medium2-Medium1-High)	CFM	495-530-565-635	530-565-635-705
	External pressure	Pa	0	0
	Sound level (Low-Medium2-Medium1-High)	dB(A)	28-29-31-33	28-30-32-34
	External finish (Panel)		White Munsell 0.70Y 8.59/0.97	
	Dimension Unit (Panel)	W : mm	840 (950)	
		D : mm	840 (950)	
		H : mm	258 (30)	
		W : inch	33-1/16 (37-3/8)	
		D : inch	33-1/16 (37-3/8)	
		H : inch	10-3/16 (1-3/16)	
	Weight Unit (Panel)	kg	24 (5)	
		lbs	53 (11)	
	Unit drain pipe I.D.	mm	32	
		inch	1-1/4	
Outdoor unit	Air flow	CMM	55	
		CFM	1,940	
	Sound level at cooling	dB(A)	47	
	Sound level at heating	dB(A)	48	
	External finish		Ivory Munsell 3Y 7.8/1.1	
	Dimension	W : mm	950	
		D : mm	330+30	
		H : mm	943	
		W : inch	37-3/8	
		D : inch	13 + 1-3/16	
		H : inch	37-1/8	
	Weight	kg	75	
		lbs	165	
Refrigerant pipe size	Gas side O.D.	mm	15.88	
		inch	5/8	
	Liquid side O.D.	mm	9.52	
		inch	3/8	
Refrigerant pipe length	Height difference	m	Max. 30	
	Length	m	Max. 50	

NOTE:

1. Rating conditions (ISO T1)
   Cooling Indoor : D.B. 27℃ (80˚F) W.B. 19℃ (66˚F) Outdoor : D.B. 35℃ (95˚F) W.B. 24℃ (75˚F)
   Heating Indoor : D.B. 20℃ (68˚F) Outdoor : D.B. 7℃ (45˚F) W.B. 6℃ (43˚F)
   Refrigerant piping length (one way) : 5m (16ft.)
2. Guaranteed operating range

		Indoor	Outdoor
Cooling	Upper limit	D.B. 35˚C, W.B. 22.5˚C	D.B. 46˚C
	Lower limit	D.B. 19˚C, W.B. 15˚C	D.B. -5˚C ※
Heating	Upper limit	D.B. 28˚C	D.B. 21˚C, W.B. 15˚C
	Lower limit	D.B. 17˚C	D.B. -11˚C, W.B. -12˚C

3. Guaranteed voltage
   198~264V, 50Hz
4. Above data based on indicated voltage
   Indoor unit Single phase 230V 50Hz
   Outdoor unit Single phase 230V 50Hz

※ If optional Air protect guide installed. D.B.-15℃

Model name	Indoor unit		PLA-RP100AA	PLA-RP125AA	PLA-RP140AA
	Outdoor unit		PUHZ-RP100VHA	PUHZ-RP125VHA	PUHZ-RP140VHA
Cooling	Capacity	Btu/h	34,100	42,700	47,800
		kW	10.0(4.9-11.4)	12.5(5.5-14.0)	14.0(5.5-15.3)
	Total input	kW	3.03	3.89	4.99
	EER		3.30	3.21	2.81
	Energy label class		A	A	C
	SHF		0.77	0.74	0.70
Heating	Capacity	Btu/h	38,200	47,800	54,600
		kW	11.2(4.5-14.0)	14.0(5.0-16.0)	16.0(5.0-18.0)
	Total input	kW	3.39	4.27	4.91
	COP		3.30	3.28	3.26
	Energy label class		C	C	C
	Booster heater	kW	-	-	-
Power supply	Phase	ϕ	1		
	Cycle	Hz	50		
	Voltage	V	230		
	Breaker size	A	32		40
Indoor unit	Air flow	CMM	20-23-26-28	22-25-28-30	
	(Low-Medium2-Medium1-High)	CFM	705-810-920-990	775-880-990-1,060	
	External pressure	Pa	0	0	
	Sound level (Low-Medium2-Medium1-High)	dB(A)	33-36-39-41	37-40-43-45	
	External finish (Panel)		White Munsell 0.70Y 8.59/0.97		
	Dimension Unit (Panel)	W : mm	840 (950)		
		D : mm	840 (950)		
		H : mm	298 (30)		
		W : inch	33-1/16 (37-3/8)		
		D : inch	33-1/16 (37-3/8)		
		H : inch	11-3/4 (1-3/16)		
	Weight Unit (Panel)	kg	30 (5)	32 (5)	
		lbs	66 (11)	71 (11)	
	Unit drain pipe I.D.	mm	32		
		inch	1-1/4		
Outdoor unit	Air flow	CMM	100		
		CFM	3,530		
	Sound level at cooling	dB(A)	49	50	
	Sound level at heating	dB(A)	51	52	
	External finish		Ivory Munsell 3Y 7.8/1.1		
	Dimension	W : mm	950		
		D : mm	330+30		
		H : mm	1350		
		W : inch	37-3/8		
		D : inch	13 + 1-3/16		
		H : inch	53-1/8		
	Weight	kg	121		
		lbs	267		
Refrigerant pipe size	Gas side O.D.	mm	15.88		
		inch	5/8		
	Liquid side O.D.	mm	9.52		
		inch	3/8		
Refrigerant pipe length	Height difference	m	Max. 30		
	Length	m	Max. 75		

NOTE: 1. Rating conditions (ISO T1)

Cooling Indoor : D.B. 27℃ (80˚F) W.B. 19℃ (66˚F) Outdoor : D.B. 35℃ (95˚F) W.B. 24℃ (75˚F)

Heating Indoor : D.B. 20℃ (68˚F) Outdoor : D.B. 7℃ (45˚F) W.B. 6℃ (43˚F)

Refrigerant piping length (one way) : 5m (16ft.)

2. Guaranteed operating range

		Indoor	Outdoor
Cooling	Upper limit	D.B. 35˚C, W.B. 22.5˚C	D.B. 46℃
	Lower limit	D.B. 19˚C, W.B. 15˚C	D.B. -5℃ ※
Heating	Upper limit	D.B. 28˚C	D.B. 21℃, W.B. 15℃
	Lower limit	D.B. 17˚C	D.B. -20℃, W.B. -20℃

3. Guaranteed voltage
198~264V, 50Hz

4. Above data based on indicated voltage
Indoor unit Single phase 230V 50Hz
Outdoor unit Single phase 230V 50Hz

※ If optional Air protect guide installed. D.B.-15℃

Model name	Indoor unit		PLA-RP100AA	PLA-RP125AA	PLA-RP140AA
	Outdoor unit		PUHZ-RP100YHA	PUHZ-RP125YHA	PUHZ-RP140YHA
Cooling	Capacity	Btu/h	34,100	42,700	47,800
		kW	10.0(4.9-11.4)	12.5(5.5-14.0)	14.0(5.5-15.3)
	Total input	kW	3.03	3.89	4.99
	EER		3.30	3.21	2.81
	Energy label class		A	A	C
	SHF		0.77	0.74	0.70
Heating	Capacity	Btu/h	38,200	47,800	54,600
		kW	11.2(4.5-14.0)	14.0(5.0-16.0)	16.0(5.0-18.0)
	Total input	kW	3.39	4.27	4.91
	COP		3.30	3.28	3.26
	Energy label class		C	C	C
	Booster heater	kW	-	-	-
Power supply	Phase	ϕ	3		
	Cycle	Hz	50		
	Voltage	V	400		
	Breaker size	A	16		
Indoor unit	Air flow	CMM	20-23-26-28	22-25-28-30	
	(Low-Medium2-Medium1-High)	CFM	705-810-920-990	775-880-990-1,060	
	External pressure	Pa	0	0	
	Sound level (Low-Medium2-Medium1-High)	dB(A)	33-36-39-41	37-40-43-45	
	External finish (Panel)		White Munsell 0.70Y 8.59/0.97		
	Dimension Unit (Panel)	W : mm	840 (950)		
		D : mm	840 (950)		
		H : mm	298 (30)		
		W : inch	33-1/16 (37-3/8)		
		D : inch	33-1/16 (37-3/8)		
		H : inch	11-3/4 (1-3/16)		
	Weight Unit (Panel)	kg	30 (5)	32 (5)	
		lbs	66 (11)	71 (11)	
	Unit drain pipe I.D.	mm	32		
		inch	1-1/4		
Outdoor unit	Air flow	CMM	100		
		CFM	3,530		
	Sound level at cooling	dB(A)	49	50	
	Sound level at heating	dB(A)	51	52	
	External finish		Ivory Munsell 3Y 7.8/1.1		
	Dimension	W : mm	950		
		D : mm	330+30		
		H : mm	1350		
		W : inch	37-3/8		
		D : inch	13 + 1-3/16		
		H : inch	53-1/8		
	Weight	kg	135		
		lbs	298		
Refrigerant pipe size	Gas side O.D.	mm	15.88		
		inch	5/8		
	Liquid side O.D.	mm	9.52		
		inch	3/8		
Refrigerant pipe length	Height difference	m	Max. 30		
	Length	m	Max. 75		

NOTE:

1. Rating conditions (ISO T1)
   Cooling Indoor : D.B. 27℃ (80˚F) W.B. 19℃ (66˚F) Outdoor : D.B. 35℃ (95˚F) W.B. 24℃ (75˚F)
   Heating Indoor : D.B. 20℃ (68˚F) Outdoor : D.B. 7℃ (45˚F) W.B. 6℃ (43˚F)
   Refrigerant piping length (one way) : 5m (16ft.)
2. Guaranteed operating range

		Indoor	Outdoor
Cooling	Upper limit	D.B. 35˚C, W.B. 22.5˚C	D.B. 46˚C
	Lower limit	D.B. 19˚C, W.B. 15˚C	D.B. -5˚C ※
Heating	Upper limit	D.B. 28˚C	D.B. 21˚C, W.B. 15˚C
	Lower limit	D.B. 17˚C	D.B. -20˚C, W.B. -20˚C

3. Guaranteed voltage
   Indoor unit 198~264V, 50Hz
   Outdoor unit 342~457V, 50Hz
4. Above data based on indicated voltage
   Indoor unit Single phase 230V 50Hz
   Outdoor unit 3 phase 400V 50Hz

※ If optional Air protect guide installed. D.B.-15℃

2-2. CEILING-CONCEALED TYPE

Model name	Indoor unit		PEAD-RP35EA	PEAD-RP50EA
	Outdoor unit		PUHZ-RP35VHA	PUHZ-RP50VHA
Cooling	Capacity	Btu/h	12,300	16,700
		kW	3.6(1.6-4.5)	4.9(2.3-5.6)
	Total input	kW	1.12	1.52
	EER		3.21	3.22
	Energy label class		A	A
	SHF		0.88	0.82
Heating	Capacity	Btu/h	14,000	20,500
		kW	4.1(1.6-5.2)	6.0(2.5-7.3)
	Total input	kW	1.26	1.65
	COP		3.25	3.64
	Energy label class		C	A
	Booster heater	kW	-	-
Power supply	Phase	ϕ	1	
	Cycle	Hz	50	
	Voltage	V	230	
	Breaker size	A	16	
Indoor unit	Air flow	CMM	11-14	13.5-17
	(Low-High)	CFM	388-494	476-600
	External pressure	Pa	30(70)	
	Sound level (Low-High)	dB(A)	34-38 (70Pa : 36-43)	36-40 (70Pa : 38-44)
	External finish		Galvanized sheets	
	Dimension	W : mm	935	
		D : mm	700	
		H : mm	295	
		W : inch	36-13/16	
		D : inch	27-5/8	
		H : inch	11-5/8	
	Weight	kg	33	35
		lbs	73	77
	Unit drain pipe		R1(External thread)	
Outdoor unit	Air flow	CMM	35	
		CFM	1,240	
	Sound level at cooling	dB(A)	44	
	Sound level at heating	dB(A)	46	
	External finish		Ivory Munsell 3Y 7.8/1.1	
	Dimension	W : mm	800	
		D : mm	330+23	
		H : mm	600	
		W : inch	31-1/2	
		D : inch	13 + 7/8	
		H : inch	23-5/8	
	Weight	kg	45	
		lbs	99	
Refrigerant pipe size	Gas side O.D.	mm	12.7	
		inch	1/2	
	Liquid side O.D.	mm	6.35	
		inch	1/4	
Refrigerant pipe length	Height difference	m	Max. 30	
	Length	m	Max. 50	

NOTE:

1. Rating conditions (ISO T1)
   Cooling Indoor : D.B. 27℃ (80˚F) W.B. 19℃ (66˚F) Outdoor : D.B. 35℃ (95˚F) W.B. 24℃ (75˚F)
   Heating Indoor : D.B. 20℃ (68˚F) Outdoor : D.B. 7℃ (45˚F) W.B. 6℃ (43˚F)
   Refrigerant piping length (one way) : 5m (16ft.)
2. Guaranteed operating range

		Indoor	Outdoor
Cooling	Upper limit	D.B. 35˚C, W.B. 22.5˚C	D.B. 46˚C
	Lower limit	D.B. 19˚C, W.B. 15˚C	D.B. -5˚C ※
Heating	Upper limit	D.B. 28˚C	D.B. 21˚C, W.B. 15˚C
	Lower limit	D.B. 17˚C	D.B. -11˚C, W.B. -12˚C

3. Guaranteed voltage
   198~264V, 50Hz
4. Above data based on indicated voltage
   Indoor unit Single phase 230V 50Hz
   Outdoor unit Single phase 230V 50Hz

※ If optional Air protect guide installed. D.B.-15℃

Indoor unit		PEAD-RP60EA	PEAD-RP71EA
Outdoor unit		PUHZ-RP60VHA	PUHZ-RP71VHA
Capacity	Btu/h	20,500	24,200
	kW	6.0(2.7-6.7)	7.1(3.3-8.1)
Total input	kW	1.86	2.15
EER		3.23	3.30
Energy label class		A	A
SHF		0.79	0.83
Capacity	Btu/h	23,900	27,300
	kW	7.0(2.8-8.2)	8.0(3.5-10.2)
Total input	kW	1.90	2.34
COP		3.68	3.42
Energy label class		A	B
Booster heater	kW	-	-
Phase	ϕ	1	
Cycle	Hz	50	
Voltage	V	230	
Breaker size	A	25	
Air flow	CMM	17-21	20-25
(Low-High)	CFM	600-741	706-883
External pressure	Pa	30(70)	70(130)
Sound level	dB(A)	37-41	37-41
(Low-High)		(70Pa : 39-46)	(130Pa : 40-45)
External finish		Galvanized sheets	
Dimension	W : mm	1175	
	D : mm	700	
	H : mm	295	
	W : inch	46-1/8	
	D : inch	27-5/8	
	H : inch	11-5/8	
Weight	kg	42	44
	lbs	92	97
Unit drain pipe		R1(External thread)	
Air flow	CMM	55	55
	CFM	1,940	1,940
Sound level at cooling	dB(A)	47	47
Sound level at heating	dB(A)	48	48
External finish		Ivory Munsell 3Y 7.8/1.1	
Dimension	W : mm	950	950
	D : mm	330+30	330+30
	H : mm	943	943
	W : inch	37-3/8	37-3/8
	D : inch	13 + 1-3/16	13 + 1-3/16
	H : inch	37-1/8	37-1/8
Weight	kg	75	75
	lbs	165	165
Gas side O.D.	mm	15.88	15.88
	inch	5/8	5/8
Liquid side O.D.	mm	9.52	9.52
	inch	3/8	3/8
Height difference	m	Max. 30	Max. 30
Length	m	Max. 50	Max. 50

NOTE:

1. Rating conditions (ISO T1)
   Cooling Indoor : D.B. 27℃ (80˚F) W.B. 19℃ (66˚F) Outdoor : D.B. 35℃ (95˚F) W.B. 24℃ (75˚F)
   Heating Indoor : D.B. 20℃ (68˚F) Outdoor : D.B. 7℃ (45˚F) W.B. 6℃ (43˚F)
   Refrigerant piping length (one way) : 5m (16ft.)
2. Guaranteed operating range

		Indoor	Outdoor
Cooling	Upper limit	D.B. 35˚C, W.B. 22.5˚C	D.B. 46˚C
	Lower limit	D.B. 19˚C, W.B. 15˚C	D.B. -5˚C ※
Heating	Upper limit	D.B. 28˚C	D.B. 21˚C, W.B. 15˚C
	Lower limit	D.B. 17˚C	D.B. -11˚C, W.B. -12˚C

3. Guaranteed voltage
   198~264V, 50Hz
4. Above data based on indicated voltage
   Indoor unit Single phase 230V 50Hz
   Outdoor unit Single phase 230V 50Hz

※ If optional Air protect guide installed. D.B.-15℃

Model name	Indoor unit		PEAD-RP100EA	PEAD-RP125EA	PEAD-RP140EA
	Outdoor unit		PUHZ-RP100VHA	PUHZ-RP125VHA	PUHZ-RP140VHA
Cooling	Capacity	Btu/h	34,100	42,700	47,800
		kW	10.0(4.9-11.4)	12.5(5.5-14.0)	14.0(5.5-15.3)
	Total input	kW	3.08	3.69	4.91
	EER		3.25	3.39	2.85
	Energy label class		A	A	C
	SHF		0.83	0.82	0.82
Heating	Capacity	Btu/h	38,200	47,800	54,600
		kW	11.2(4.5-14.0)	14.0(5.0-16.0)	16.0(5.0-18.0)
	Total input	kW	3.48	4.11	4.76
	COP		3.22	3.41	3.36
	Energy label class		C	B	C
	Booster heater	kW	-	-	-
Power supply	Phase	ϕ	1		
	Cycle	Hz	50		
	Voltage	V	230		
	Breaker size	A	32		40
Indoor unit	Air flow	CMM	27-34	33.5-42	36.5-46
	(Low-High)	CFM	953-1200	1183-1483	1288-1624
	External pressure	Pa	70(130)		
	Sound level	dB(A)	41-46	44-50	46-51
	(Low-High)		(130Pa : 42-48)	(130Pa : 46-52)	(130Pa : 47-53)
	External finish		Galvanized sheets		
	Dimension	W : mm	1415		1715
		D : mm	700	740	
		H : mm	295	325	
		W : inch	55-11/16		67-1/2
		D : inch	27-5/8	29-1/8	
		H : inch	11-5/8	12-13/16	
	Weight	kg	62	65	70
		lbs	136	143	154
	Unit drain pipe		R1(External thread)		
Outdoor unit	Air flow	CMM	100		
		CFM	3,530		
	Sound level at cooling	dB(A)	49	50	
	Sound level at heating	dB(A)	51	52	
	External finish		Ivory Munsell 3Y 7.8/1.1		
	Dimension	W : mm	950		
		D : mm	330+30		
		H : mm	1350		
		W : inch	37-3/8		
		D : inch	13 + 1-3/16		
		H : inch	53-1/8		
	Weight	kg	121		
		lbs	267		
Refrigerant pipe size	Gas side O.D.	mm	15.88		
		inch	5/8		
	Liquid side O.D.	mm	9.52		
		inch	3/8		
Refrigerant pipe length	Height difference	m	Max. 30		
	Length	m	Max. 75		

NOTE:

1. Rating conditions (ISO T1)
   Cooling Indoor : D.B. 27℃ (80˚F) W.B. 19℃ (66˚F) Outdoor : D.B. 35℃ (95˚F) W.B. 24℃ (75˚F)
   Heating Indoor : D.B. 20℃ (68˚F) Outdoor : D.B. 7℃ (45˚F) W.B. 6℃ (43˚F)
   Refrigerant piping length (one way) : 5m (16ft.)
2. Guaranteed operating range

		Indoor	Outdoor
Cooling	Upper limit	D.B. 35˚C, W.B. 22.5˚C	D.B. 46℃
	Lower limit	D.B. 19˚C, W.B. 15˚C	D.B. -5℃ ※
Heating	Upper limit	D.B. 28˚C	D.B. 21℃, W.B. 15℃
	Lower limit	D.B. 17˚C	D.B. -20℃, W.B. -20℃

3. Guaranteed voltage
   198~264V, 50Hz
4. Above data based on indicated voltage
   Indoor unit Single phase 230V 50Hz
   Outdoor unit Single phase 230V 50Hz

※ If optional Air protect guide installed. D.B.-15℃

Model name	Indoor unit		PEAD-RP100EA	PEAD-RP125EA	PEAD-RP140EA
	Outdoor unit		PUHZ-RP100YHA	PUHZ-RP125YHA	PUHZ-RP140YHA
Cooling	Capacity	Btu/h	34,100	42,700	47,800
		kW	10.0(4.9-11.4)	12.5(5.5-14.0)	14.0(5.5-15.3)
	Total input	kW	3.08	3.69	4.91
	EER		3.25	3.39	2.85
	Energy label class		A	A	C
	SHF		0.83	0.82	0.82
Heating	Capacity	Btu/h	38,200	47,800	54,600
		kW	11.2(4.5-14.0)	14.0(5.0-16.0)	16.0(5.0-18.0)
	Total input	kW	3.48	4.11	4.76
	COP		3.22	3.41	3.36
	Energy label class		C	B	C
	Booster heater	kW	-	-	-
Power supply	Phase	ϕ	3		
	Cycle	Hz	50		
	Voltage	V	400		
	Breaker size	A	16		
Indoor unit	Air flow	CMM	27-34	33.5-42	36.5-46
	(Low-High)	CFM	953-1200	1183-1483	1288-1624
	External pressure	Pa	70(130)		
	Sound level (Low-High)	dB(A)	41-46 (130Pa : 42-48)	44-50 (130Pa : 46-52)	46-51 (130Pa : 47-53)
	External finish		Galvanized sheets		
	Dimension	W : mm	1415		1715
		D : mm	700	740	
		H : mm	295	325	
		W : inch	55-11/16		67-1/2
		D : inch	27-5/8	29-1/8	
		H : inch	11-5/8	12-13/16	
	Weight	kg	62	65	70
		lbs	136	143	154
	Unit drain pipe		R1(External thread)		
Outdoor unit	Air flow	CMM	100		
		CFM	3,530		
	Sound level at cooling	dB(A)	49	50	
	Sound level at heating	dB(A)	51	52	
	External finish		Ivory Munsell 3Y 7.8/1.1		
	Dimension	W : mm	950		
		D : mm	330+30		
		H : mm	1350		
		W : inch	37-3/8		
		D : inch	13 + 1-3/16		
		H : inch	53-1/8		
	Weight	kg	135		
		lbs	298		
Refrigerant pipe size	Gas side O.D.	mm	15.88		
		inch	5/8		
	Liquid side O.D.	mm	9.52		
		inch	3/8		
Refrigerant pipe length	Height difference	m	Max. 30		
	Length	m	Max. 75		

NOTE:

1. Rating conditions (ISO T1)
   Cooling Indoor : D.B. 27℃ (80˚F) W.B. 19℃ (66˚F) Outdoor : D.B. 35℃ (95˚F) W.B. 24℃ (75˚F)
   Heating Indoor : D.B. 20℃ (68˚F) Outdoor : D.B. 7℃ (45˚F) W.B. 6℃ (43˚F)
   Refrigerant piping length (one way) : 5m (16ft.)
2. Guaranteed operating range

		Indoor	Outdoor
Cooling	Upper limit	D.B. 35˚C, W.B. 22.5˚C	D.B. 46˚C
	Lower limit	D.B. 19˚C, W.B. 15˚C	D.B. -5˚C ※
Heating	Upper limit	D.B. 28˚C	D.B. 21˚C, W.B. 15˚C
	Lower limit	D.B. 17˚C	D.B. -20˚C, W.B. -20˚C

3. Guaranteed voltage
   Indoor unit 198~264V, 50Hz
   Outdoor unit 342~457V, 50Hz
4. Above data based on indicated voltage
   Indoor unit Single phase 230V 50Hz
   Outdoor unit 3 phase 400V 50Hz

※ If optional Air protect guide installed. D.B.-15℃

Model name	Indoor unit		PEAD-RP60GA	PEAD-RP71GA	PEAD-RP100GA
	Outdoor unit		PUHZ-RP60VHA	PUHZ-RP71VHA	PUHZ-RP100VHA
Cooling	Capacity	Btu/h	20,500	24,200	34,100
		kW	6.0(2.7-6.7)	7.1(3.3-8.1)	10.0(4.9-11.4)
	Total input	kW	1.68	2.15	3.08
	EER		3.57	3.30	3.25
	Energy label class		A	A	A
	SHF		0.88	0.83	0.83
Heating	Capacity	Btu/h	23,900	27,300	38,200
		kW	7.0(2.8-8.2)	8.0(3.5-10.2)	11.2(4.5-14.0)
	Total input	kW	1.77	2.34	3.48
	COP		3.95	3.42	3.22
	Energy label class		A	B	C
	Booster heater	kW	-	-	-
Power supply	Phase	ϕ	1		
	Cycle	Hz	50		
	Voltage	V	230		
	Breaker size	A	25		32
Indoor unit	Air flow	CMM	16.5-21	20-25	26.5-33
	(Low-High)	CFM	582-741	706-883	935-1165
	External pressure	Pa	10/50/70		10/50/70
	Sound level (Low-High)	dB(A)	33-37/35-40/36-42 (10/50/70Pa)	35-38/37-41/37-43 (10/50/70Pa)	40-43/42-45/42-46 (10/50/70Pa)
	External finish		Galvanized sheets		
	Dimension	W : mm	1171		1411
		D : mm	740		
		H : mm	275		
		W : inch	46-1/8		55-9/16
		D : inch	29-1/8		
		H : inch	10-13/16		
	Weight	kg	42		50
		lbs	93		111
	Unit drain pipe O.D.	mm	32		
		inch	1-1/4		
Outdoor unit	Air flow	CMM	55		100
		CFM	1,940		3,530
	Sound level at cooling	dB(A)	47		49
	Sound level at heating	dB(A)	48		51
	External finish		Ivory Munsell 3Y 7.8/1.1		
	Dimension	W : mm	950		
		D : mm	330+30		
		H : mm	943		1350
		W : inch	37-3/8		
		D : inch	13 + 1-3/16		
		H : inch	37-1/8		53-1/8
	Weight	kg	75		121
		lbs	165		267
Refrigerant pipe size	Gas side O.D.	mm	15.88		
		inch	5/8		
	Liquid side O.D.	mm	9.52		
		inch	3/8		
Refrigerant pipe length	Height difference	m	Max. 30		Max. 30
	Length	m	Max. 50		Max. 75

NOTE:

1. Rating conditions (ISO T1)
   Cooling Indoor : D.B. 27℃ (80˚F) W.B. 19℃ (66˚F) Outdoor : D.B. 35℃ (95˚F) W.B. 24℃ (75˚F)
   Heating Indoor : D.B. 20℃ (68˚F) Outdoor : D.B. 7℃ (45˚F) W.B. 6℃ (43˚F)
   Refrigerant piping length (one way) : 5m (16ft.)
2. Guaranteed operating range

		Indoor	Outdoor
Cooling	Upper limit	D.B. 35˚C, W.B. 22.5˚C	D.B. 46˚C
	Lower limit	D.B. 19˚C, W.B. 15˚C	D.B. -5˚C ※1
Heating	Upper limit	D.B. 28˚C	D.B. 21˚C, W.B. 15˚C
	Lower limit	D.B. 17˚C	D.B. -11˚C, W.B. -12˚C ※2

3. Guaranteed voltage
   198~264V, 50Hz
4. Above data based on indicated voltage
   Indoor unit Single phase 230V 50Hz
   Outdoor unit Single phase 230V 50Hz

※1. If optional Air protect guide installed. D.B.-15℃

※2. For RP100 D.B. -20℃, W.B. -20℃

Model name	Indoor unit		PEAD-RP100GA
	Outdoor unit		PUHZ-RP100YHA
Cooling	Capacity	Btu/h	34,100
		kW	10.0(4.9-11.4)
	Total input	kW	3.08
	EER		3.25
	Energy label class		A
	SHF		0.83
Heating	Capacity	Btu/h	38,200
		kW	11.2(4.5-14.0)
	Total input	kW	3.48
	COP		3.22
	Energy label class		C
	Booster heater	kW	-
Power supply	Phase	ϕ	3
	Cycle	Hz	50
	Voltage	V	400
	Breaker size	A	16
Indoor unit	Air flow	CMM	26.5-33
	(Low-High)	CFM	935-1165
	External pressure	Pa	10/50/70
	Sound level (Low-High)	dB(A)	40-43/42-45/42-46 (10/50/70Pa)
	External finish		Galvanized sheets
	Dimension	W : mm	1411
		D : mm	740
		H : mm	275
		W : inch	55-9/16
		D : inch	29-1/8
		H : inch	10-13/16
	Weight	kg	50
		lbs	111
	Unit drain pipe O.D.	mm	32
		inch	1-1/4
Outdoor unit	Air flow	CMM	100
		CFM	3,530
	Sound level at cooling	dB(A)	49
	Sound level at heating	dB(A)	51
	External finish		Ivory Munsell 3Y 7.8/1.1
	Dimension	W : mm	943
		D : mm	330+30
		H : mm	1350
		W : inch	37-3/8
		D : inch	13 + 1-3/16
		H : inch	53-1/8
	Weight	kg	135
		lbs	298
Refrigerant pipe size	Gas side O.D.	mm	15.88
		inch	5/8
	Liquid side O.D.	mm	9.52
		inch	3/8
Refrigerant pipe length	Height difference	m	Max. 30
	Length	m	Max. 75

NOTE:

1. Rating conditions (ISO T1)
   Cooling Indoor : D.B. 27℃ (80˚F) W.B. 19℃ (66˚F) Outdoor : D.B. 35℃ (95˚F) W.B. 24℃ (75˚F)
   Heating Indoor : D.B. 20℃ (68˚F) Outdoor : D.B. 7℃ (45˚F) W.B. 6℃ (43˚F)
   Refrigerant piping length (one way) : 5m (16ft.)
2. Guaranteed operating range

		Indoor	Outdoor
Cooling	Upper limit	D.B. 35˚C, W.B. 22.5˚C	D.B. 46℃
	Lower limit	D.B. 19˚C, W.B. 15˚C	D.B. -5℃ ※
Heating	Upper limit	D.B. 28˚C	D.B. 21℃, W.B. 15℃
	Lower limit	D.B. 17˚C	D.B. -20℃, W.B. -20℃

3. Guaranteed voltage
   198~264V, 50Hz
4. Above data based on indicated voltage
   Indoor unit Single phase 230V 50Hz
   Outdoor unit Single phase 230V 50Hz

※ If optional Air protect guide installed. D.B.-15℃

Model name	Indoor unit		PEA-RP71EA
	Outdoor unit		PUHZ-RP71VHA
Cooling	Capacity	Btu/h	24,200
		kW	7.1(3.3-8.1)
	Total input	kW	2.48
	EER		2.86
	SRI		3.87
	SHF		0.82
Heating	Capacity	Btu/h	27,300
		kW	8.0(3.5-10.2)
	Total input	kW	2.47
	COP		3.24
	SRI		4.13
	Booster heater	kW	-
Power supply	Phase	ϕ	1
	Cycle	Hz	50
	Voltage	V	230
	Breaker size	A	25
Indoor unit	Air flow	CMM	22-27
	(Low-High)	CFM	780-955
	External pressure	Pa	125
	Sound level (Low-High)	dB(A)	52-55
	External finish		Galvanized sheets
	Dimension	W : mm	785
		D : mm	690
		H : mm	428
		W : inch	31
		D : inch	27-1/16
		H : inch	16-7/8
	Weight	kg	46
		lbs	101
	Unit drain pipe		R1(External thread)
Outdoor unit	Air flow	CMM	55
		CFM	1,940
	Sound level at cooling	dB(A)	47
	Sound level at heating	dB(A)	48
	External finish		Ivory Munsell 3Y 7.8/1.1
	Dimension	W : mm	950
		D : mm	330+30
		H : mm	943
		W : inch	37-3/8
		D : inch	13 + 1-3/16
		H : inch	37-1/8
	Weight	kg	75
		lbs	165
Refrigerant pipe size	Gas side O.D.	mm	15.88
		inch	5/8
	Liquid side O.D.	mm	9.52
		inch	3/8
Refrigerant pipe length	Height difference	m	Max. 30
	Length	m	Max. 50

NOTE:

1. Rating conditions (ISO T1)
   Cooling Indoor : D.B. 27℃ (80˚F) W.B. 19℃ (66˚F) Outdoor : D.B. 35℃ (95˚F) W.B. 24℃ (75˚F)
   Heating Indoor : D.B. 20℃ (68˚F) Outdoor : D.B. 7℃ (45˚F) W.B. 6℃ (43˚F)
   Refrigerant piping length (one way) : 5m (16ft.)
2. Guaranteed operating range

		Indoor	Outdoor
Cooling	Upper limit	D.B. 35˚C, W.B. 22.5˚C	D.B. 46˚C
	Lower limit	D.B. 19˚C, W.B. 15˚C	D.B. -5˚C ※
Heating	Upper limit	D.B. 28˚C	D.B. 21˚C, W.B. 15˚C
	Lower limit	D.B. 17˚C	D.B. -11˚C, W.B. -12˚C

3. Guaranteed voltage
   198~264V, 50Hz
4. Above data based on indicated voltage
   Indoor unit Single phase 230V 50Hz
   Outdoor unit Single phase 230V 50Hz

※ If optional Air protect guide installed. D.B.-15℃

Model name	Indoor unit		PEA-RP100EA	PEA-RP125EA	PEA-RP140EA
	Outdoor unit		PUHZ-RP100VHA	PUHZ-RP125VHA	PUHZ-RP140VHA
Cooling	Capacity	Btu/h	34,100	42,700	47,800
		kW	10.0(4.9-11.4)	12.5(5.5-14.0)	14.0(5.5-15.3)
	Total input	kW	3.25	4.42	5.03
	EER		3.08	2.83	2.78
	SRI		4.60	3.77	3.60
	SHF		0.82	0.81	0.89
Heating	Capacity	Btu/h	38,200	47,800	54,600
		kW	11.2(4.5-14.0)	14.0(5.0-16.0)	16.0(5.0-18.0)
	Total input	kW	3.2	4.30	4.73
	COP		3.50	3.26	3.38
	SRI		5.00	4.20	4.60
	Booster heater	kW	-	-	-
Power supply	Phase	ϕ	1		
	Cycle	Hz	50		
	Voltage	V	230		
	Breaker size	A	32		40
Indoor unit	Air flow	CMM	27-34	34-42	48-60
	(Low-High)	CFM	955-1200	1200-1480	1695-2120
	External pressure	Pa	125		
	Sound level (Low-High)	dB(A)	54-58		51-55
	External finish		Galvanized sheets		
	Dimension	W : mm	1055	1255	1415
		D : mm	690		
		H : mm	428		
		W : inch	41-1/2	49-7/16	55-3/4
		D : inch	27-1/16		
		H : inch	16-7/8		
	Weight	kg	58	72	73
		lbs	128	159	161
	Unit drain pipe		R1(External thread)		
Outdoor unit	Air flow	CMM	100		
		CFM	3,530		
	Sound level at cooling	dB(A)	49	50	
	Sound level at heating	dB(A)	51	52	
	External finish		Ivory Munsell 3Y 7.8/1.1		
	Dimension	W : mm	950		
		D : mm	330+30		
		H : mm	1350		
		W : inch	37-3/8		
		D : inch	13 + 1-3/16		
		H : inch	53-1/8		
	Weight	kg	121		
		lbs	267		
Refrigerant pipe size	Gas side O.D.	mm	15.88		
		inch	5/8		
	Liquid side O.D.	mm	9.52		
		inch	3/8		
Refrigerant pipe length	Height difference	m	Max. 30		
	Length	m	Max. 75		

NOTE:

1. Rating conditions (ISO T1)
   Cooling Indoor : D.B. 27℃ (80˚F) W.B. 19℃ (66˚F) Outdoor : D.B. 35℃ (95˚F) W.B. 24℃ (75˚F)
   Heating Indoor : D.B. 20℃ (68˚F) Outdoor : D.B. 7℃ (45˚F) W.B. 6℃ (43˚F)
   Refrigerant piping length (one way) : 5m (16ft.)
2. Guaranteed operating range

		Indoor	Outdoor
Cooling	Upper limit	D.B. 35˚C, W.B. 22.5˚C	D.B. 46℃
	Lower limit	D.B. 19˚C, W.B. 15˚C	D.B. -5℃ ※
Heating	Upper limit	D.B. 28˚C	D.B. 21℃, W.B. 15℃
	Lower limit	D.B. 17˚C	D.B. -20℃, W.B. -20℃

3. Guaranteed voltage
   198~264V, 50Hz
4. Above data based on indicated voltage
   Indoor unit Single phase 230V 50Hz
   Outdoor unit Single phase 230V 50Hz

※ If optional Air protect guide installed. D.B.-15℃

Model name	Indoor unit		PEH-RP200MYA	PEH-RP250MYA
	Outdoor unit		PUHZ-RP200YHA	PUHZ-RP250YHA
Cooling	Capacity	Btu/h	64,800	75,000
		kW	19.0(10.0-22.4)	22.0(12.5-28.0)
	Total input	kW	7.28	8.43
	EER		2.61	2.61
	Energy label class		D	D
	SHF		0.75	0.82
Heating	Capacity	Btu/h	76,400	92,100
		kW	22.4(10.0-25.0)	27.0(15.7-31.5)
	Total input	kW	6.98	8.41
	COP		3.21	3.21
	Energy label class		C	C
	Booster heater	kW	-	-
Power supply	Phase	ϕ	3	
	Cycle	Hz	50	
	Voltage	V	400	
	Breaker size	A	32	
Indoor unit	Air flow	CMM	60	80
		CFM	2120	2825
	External pressure	Pa	50/150	
	Sound level	dB(A)	49 (50Pa)	53 (50Pa)
	External finish		Galvanizing	
	Dimension	W : mm	1380	1580
		D : mm	650	
		H : mm	428	
		W : inch	54-5/16	62-3/16
		D : inch	25-9/16	
		H : inch	16-7/8	
	Weight	kg	70	80
		lbs	154	176
	Unit drain pipe		RC1	
Outdoor unit	Air flow	CMM	150	
		CFM	5,300	
	Sound level at cooling	dB(A)	55	58
	Sound level at heating	dB(A)	56	58
	External finish		Ivory Munsell 3Y 7.8/1.1	
	Dimension	W : mm	900	
		D : mm	750	
		H : mm	1798	
		W : inch	35-7/16	
		D : inch	29-17/32	
		H : inch	70-25/32	
	Weight	kg	198	
		lbs	436	
Refrigerant pipe size	Gas side O.D.	mm	25.4	28.58
		inch	1	1-1/8
	Liquid side O.D.	mm	9.52	12.7
		inch	3/8	1/2
Refrigerant pipe length	Height difference	m	Max. 40	
	Length	m	Max. 120	

NOTE:

1. Rating conditions (ISO T1)
   Cooling Indoor : D.B. 27℃ (80˚F) W.B. 19℃ (66˚F) Outdoor : D.B. 35℃ (95˚F) W.B. 24℃ (75˚F)
   Heating Indoor : D.B. 20℃ (68˚F) Outdoor : D.B. 7℃ (45˚F) W.B. 6℃ (43˚F)
   Refrigerant piping length (one way) : 5m (16ft.)
2. Guaranteed operating range

		Indoor	Outdoor
Cooling	Upper limit	D.B. 35˚C, W.B. 22.5˚C	D.B. 46℃
	Lower limit	D.B. 19˚C, W.B. 15˚C	D.B. -5℃ ※
Heating	Upper limit	D.B. 28˚C	D.B. 21℃, W.B. 15℃
	Lower limit	D.B. 17˚C	D.B. -20℃, W.B. -20℃

3. Guaranteed voltage
   198~264V, 50Hz
4. Above data based on indicated voltage
   Indoor unit Single phase 230V 50Hz
   Outdoor unit Single phase 230V 50Hz

※ If optional Air protect guide installed. D.B.-15℃

2-3. WALL-MOUNTED TYPE

Model name	Indoor unit		PKA-RP35GAL	PKA-RP50GAL
	Outdoor unit		PUHZ-RP35VHA	PUHZ-RP50VHA
Cooling	Capacity	Btu/h	12,300	15,700
		kW	3.6(1.6-4.5)	4.6(2.3-5.4)
	Total input	kW	1.03	1.63
	EER		3.50	2.82
	Energy label class		A	C
	SHF		0.84	0.74
Heating	Capacity	Btu/h	14,000	15,400
		kW	4.1(1.6-5.2)	4.5(2.5-6.2)
	Total input	kW	1.27	1.40
	COP		3.23	3.21
	Energy label class		C	C
	Booster heater	kW	-	-
Power supply	Phase	ϕ	1	
	Cycle	Hz	50	
	Voltage	V	230	
	Breaker size	A	16	
Indoor unit	Air flow	CMM	9-10-11-12	
	(Low-Medium2-Medium1-High)	CFM	320-355-390-425	
	External pressure	Pa	0	
	Sound level (Low-Medium2-Medium1-High)	dB(A)	36-38-41-43	
	External finish		White Munsell 0.70Y 8.59/0.97	
	Dimension	W : mm	990	
		D : mm	235	
		H : mm	340	
		W : inch	39	
		D : inch	9-1/4	
		H : inch	13-3/8	
	Weight	kg	16	
		lbs	35	
	Unit drain pipe O.D.	mm	20	
		inch	13/16	
Outdoor unit	Air flow	CMM	35	
		CFM	1,240	
	Sound level at cooling	dB(A)	44	
	Sound level at heating	dB(A)	46	
	External finish		Ivory Munsell 3Y 7.8/1.1	
	Dimension	W : mm	800	
		D : mm	330+23	
		H : mm	600	
		W : inch	31-1/2	
		D : inch	13 + 7/8	
		H : inch	23-5/8	
	Weight	kg	45	
		lbs	99	
Refrigerant pipe size	Gas side O.D.	mm	12.7	
		inch	1/2	
	Liquid side O.D.	mm	6.35	
		inch	1/4	
Refrigerant pipe length	Height difference	m	Max. 30	
	Length	m	Max. 50	

NOTE:

1. Rating conditions (ISO T1)
   Cooling Indoor : D.B. 27℃ (80˚F) W.B. 19℃ (66˚F) Outdoor : D.B. 35℃ (95˚F) W.B. 24℃ (75˚F)
   Heating Indoor : D.B. 20℃ (68˚F) Outdoor : D.B. 7℃ (45˚F) W.B. 6℃ (43˚F)
   Refrigerant piping length (one way) : 5m (16ft.)
2. Guaranteed operating range

		Indoor	Outdoor
Cooling	Upper limit	D.B. 35˚C, W.B. 22.5˚C	D.B. 46˚C
	Lower limit	D.B. 19˚C, W.B. 15˚C	D.B. -5˚C ※
Heating	Upper limit	D.B. 28˚C	D.B. 21˚C, W.B. 15˚C
	Lower limit	D.B. 17˚C	D.B. -11˚C, W.B. -12˚C

3. Guaranteed voltage
   198~264V, 50Hz
4. Above data based on indicated voltage
   Indoor unit Single phase 230V 50Hz
   Outdoor unit Single phase 230V 50Hz

※ If optional Air protect guide installed. D.B.-15℃

Model name	Indoor unit		PKA-RP60FAL	PKA-RP71FAL	PKA-RP100FAL
	Outdoor unit		PUHZ-RP60VHA	PUHZ-RP71VHA	PUHZ-RP100VHA
Cooling	Capacity	Btu/h	20,500	24,200	34,100
		kW	6.0(2.7-6.7)	7.1(3.3-8.1)	10.0(4.9-11.4)
	Total input	kW	1.55	1.98	2.93
	EER		3.87	3.59	3.41
	Energy label class		A	A	A
	SHF		0.83	0.77	0.77
Heating	Capacity	Btu/h	23,900	27,300	38,200
		kW	7.0(2.8-8.2)	8.0(3.5-10.2)	11.2(4.5-14.0)
	Total input	kW	2.01	2.40	3.25
	COP		3.48	3.33	3.45
	Energy label class		B	C	B
	Booster heater	kW	-	-	-
Power supply	Phase	ϕ	1		
	Cycle	Hz	50		
	Voltage	V	230		
	Breaker size	A	25		32
Indoor unit	Air flow	CMM	15-20		22-28
	(Low-High)	CFM	530-705		780-990
	External pressure	Pa	0		
	Sound level (Low-High)	dB(A)	39-45		41-46
	External finish		Munsell 3.4Y 7.7/0.8		
	Dimension	W : mm	1400		1680
		D : mm	235		
		H : mm	340		
		W : inch	55-1/8		66-1/8
		D : inch	9-1/4		
		H : inch	13-3/8		
	Weight	kg	24		28
		lbs	53		62
	Unit drain pipe O.D.	mm	20		
		inch	13/16		
Outdoor unit	Air flow	CMM	55		100
		CFM	1,940		3,530
	Sound level at cooling	dB(A)	47		49
	Sound level at heating	dB(A)	48		51
	External finish		Ivory Munsell 3Y 7.8/1.1		
	Dimension	W : mm	950		
		D : mm	330+30		
		H : mm	943		1350
		W : inch	37-3/8		
		D : inch	13 + 1-3/16		
		H : inch	37-1/8		53-1/8
	Weight	kg	75		121
		lbs	165		267
Refrigerant pipe size	Gas side O.D.	mm	15.88		
		inch	5/8		
	Liquid side O.D.	mm	9.52		
		inch	3/8		
Refrigerant pipe length	Height difference	m	Max. 30		Max. 30
	Length	m	Max. 50		Max. 75

NOTE:

1. Rating conditions (ISO T1)
   Cooling Indoor : D.B. 27℃ (80˚F) W.B. 19℃ (66˚F) Outdoor : D.B. 35℃ (95˚F) W.B. 24℃ (75˚F)
   Heating Indoor : D.B. 20℃ (68˚F) Outdoor : D.B. 7℃ (45˚F) W.B. 6℃ (43˚F)
   Refrigerant piping length (one way) : 5m (16ft.)
2. Guaranteed operating range

		Indoor	Outdoor
Cooling	Upper limit	D.B. 35˚C, W.B. 22.5˚C	D.B. 46˚C
	Lower limit	D.B. 19˚C, W.B. 15˚C	D.B. -5˚C ※1
Heating	Upper limit	D.B. 28˚C	D.B. 21˚C, W.B. 15˚C
	Lower limit	D.B. 17˚C	D.B. -11˚C, W.B. -12˚C ※2

3. Guaranteed voltage
   198~264V, 50Hz
4. Above data based on indicated voltage
   Indoor unit Single phase 230V 50Hz
   Outdoor unit Single phase 230V 50Hz

※1. If optional Air protect guide installed. D.B.-15℃
※2. For RP100 D.B. -20℃, W.B. -20℃

Model name	Indoor unit		PKA-RP100FAL
	Outdoor unit		PUHZ-RP100YHA
Cooling	Capacity	Btu/h	34,100
		kW	10.0(4.9-11.4)
	Total input	kW	2.93
	EER		3.41
	Energy label class		A
	SHF		0.77
Heating	Capacity	Btu/h	38,200
		kW	11.2(4.5-14.0)
	Total input	kW	3.25
	COP		3.45
	Energy label class		B
	Booster heater	kW	-
Power supply	Phase	ϕ	3
	Cycle	Hz	50
	Voltage	V	400
	Breaker size	A	16
Indoor unit	Air flow	CMM	22-28
	(Low-High)	CFM	780-990
	External pressure	Pa	0
	Sound level (Low-High)	dB(A)	41-46
	External finish		Munsell 3.4Y 7.7/0.8
	Dimension	W : mm	1680
		D : mm	235
		H : mm	340
		W : inch	66-1/8
		D : inch	9-1/4
		H : inch	13-3/8
	Weight	kg	28
		lbs	62
	Unit drain pipe O.D.	mm	20
		inch	13/16
Outdoor unit	Air flow	CMM	100
		CFM	3,530
	Sound level at cooling	dB(A)	49
	Sound level at heating	dB(A)	51
	External finish		Ivory Munsell 3Y 7.8/1.1
	Dimension	W : mm	950
		D : mm	330+30
		H : mm	1350
		W : inch	37-3/8
		D : inch	13 + 1-3/16
		H : inch	53-1/8
	Weight	kg	135
		lbs	298
Refrigerant pipe size	Gas side O.D.	mm	15.88
		inch	5/8
	Liquid side O.D.	mm	9.52
		inch	3/8
Refrigerant pipe length	Height difference	m	Max. 30
	Length	m	Max. 75

NOTE:

1. Rating conditions (ISO T1)
   Cooling Indoor : D.B. 27℃ (80˚F) W.B. 19℃ (66˚F) Outdoor : D.B. 35℃ (95˚F) W.B. 24℃ (75˚F)
   Heating Indoor : D.B. 20℃ (68˚F) Outdoor : D.B. 7℃ (45˚F) W.B. 6℃ (43˚F)
   Refrigerant piping length (one way) : 5m (16ft.)
2. Guaranteed operating range

		Indoor	Outdoor
Cooling	Upper limit	D.B. 35˚C, W.B. 22.5˚C	D.B. 46℃
	Lower limit	D.B. 19˚C, W.B. 15˚C	D.B. -5℃ ※
Heating	Upper limit	D.B. 28˚C	D.B. 21℃, W.B. 15℃
	Lower limit	D.B. 17˚C	D.B. -20℃, W.B. -20℃

3. Guaranteed voltage
   198~264V, 50Hz
4. Above data based on indicated voltage
   Indoor unit Single phase 230V 50Hz
   Outdoor unit Single phase 230V 50Hz

※ If optional Air protect guide installed. D.B.-15℃

2-4. CEILING-SUSPENDED TYPE

Model name	Indoor unit		PCA-RP50GA	PCA-RP60GA	PCA-RP71GA
	Outdoor unit		PUHZ-RP50VHA	PUHZ-RP60VHA	PUHZ-RP71VHA
Cooling	Capacity	Btu/h	16,000	20,500	24,200
		kW	4.7(2.3-5.4)	6.0(2.7-6.7)	7.1(3.3-8.1)
	Total input	kW	1.67	1.63	2.14
	EER		2.81	3.68	3.32
	Energy label class		C	A	A
	SHF		0.76	0.81	0.74
Heating	Capacity	Btu/h	18,800	23,900	27,300
		kW	5.5(2.5-6.6)	7.0(2.8-8.2)	8.0(3.5-10.2)
	Total input	kW	1.71	2.03	2.43
	COP		3.22	3.45	3.29
	Energy label class		C	B	C
	Booster heater	kW	-	-	-
Power supply	Phase	ϕ	1		
	Cycle	Hz	50		
	Voltage	V	230		
	Breaker size	A	16	25	
Indoor unit	Air flow	CMM	10-11-12-13	14-15-16-18	
	(Low-Medium2-Medium1-High)	CFM	355-390-425-460	495-530-565-635	
	External pressure	Pa	0	0	
	Sound level (Low-Medium2-Medium1-High)	dB(A)	37-38-40-42	37-39-41-43	
	External finish		White Munsell 0.70Y 8.59/0.97		
	Dimension	W : mm	1000	1310	
		D : mm	680		
		H : mm	210		
		W : inch	39-3/8	51-9/16	
		D : inch	26-3/4		
		H : inch	8-1/4		
	Weight	kg	27	34	
		lbs	60	75	
	Unit drain pipe I.D.	mm	26		
		inch	1		
Outdoor unit	Air flow	CMM	35	55	
		CFM	1,240	1,940	
	Sound level at cooling	dB(A)	44	47	
	Sound level at heating	dB(A)	46	48	
	External finish		Ivory Munsell 3Y 7.8/1.1		
	Dimension	W : mm	800	950	
		D : mm	330+23	330+30	
		H : mm	600	943	
		W : inch	31-1/2	37-3/8	
		D : inch	13 + 7/8	13 + 1-3/16	
		H : inch	23-5/8	37-1/8	
	Weight	kg	45	75	
		lbs	99	165	
Refrigerant pipe size	Gas side O.D.	mm	12.7	15.88	
		inch	1/2	5/8	
	Liquid side O.D.	mm	6.35	9.52	
		inch	1/4	3/8	
Refrigerant pipe length	Height difference	m	Max. 30	Max. 30	
	Length	m	Max. 50	Max. 50	

NOTE:

1. Rating conditions (ISO T1)
   Cooling Indoor : D.B. 27℃ (80˚F) W.B. 19℃ (66˚F) Outdoor : D.B. 35℃ (95˚F) W.B. 24℃ (75˚F)
   Heating Indoor : D.B. 20℃ (68˚F) Outdoor : D.B. 7℃ (45˚F) W.B. 6℃ (43˚F)
   Refrigerant piping length (one way) : 5m (16ft.)
2. Guaranteed operating range

		Indoor	Outdoor
Cooling	Upper limit	D.B. 35˚C, W.B. 22.5˚C	D.B. 46˚C
	Lower limit	D.B. 19˚C, W.B. 15˚C	D.B. -5˚C ※
Heating	Upper limit	D.B. 28˚C	D.B. 21˚C, W.B. 15˚C
	Lower limit	D.B. 17˚C	D.B. -11˚C, W.B. -12˚C

3. Guaranteed voltage
   198~264V, 50Hz
4. Above data based on indicated voltage
   Indoor unit Single phase 230V 50Hz
   Outdoor unit Single phase 230V 50Hz

※ If optional Air protect guide installed. D.B.-15℃

Model name	Indoor unit		PCA-RP100GA	PCA-RP125GA	PCA-RP140GA
	Outdoor unit		PUHZ-RP100VHA	PUHZ-RP125VHA	PUHZ-RP140VHA
Cooling	Capacity	Btu/h	34,100	42,700	47,800
		kW	10.0(4.9-11.4)	12.5(5.5-14.0)	14.0(5.5-15.3)
	Total input	kW	2.92	3.89	4.96
	EER		3.42	3.21	2.82
	Energy label class		A	A	C
	SHF		0.75	0.77	0.74
Heating	Capacity	Btu/h	38,200	47,800	54,600
		kW	11.2(4.5-14.0)	14.0(5.0-16.0)	16.0(5.0-18.0)
	Total input	kW	3.26	4.34	4.60
	COP		3.44	3.23	3.48
	Energy label class		B	C	B
	Booster heater	kW	-	-	-
Power supply	Phase	ϕ	1		
	Cycle	Hz	50		
	Voltage	V	230		
	Breaker size	A	32		40
Indoor unit	Air flow	CMM	20-21-23-25	27-30-32-34	
	(Low-Medium2-Medium1-High)	CFM	705-840-810-885	955-1060-1130-1200	
	External pressure	Pa	0	0	
	Sound level (Low-Medium2-Medium1-High)	dB(A)	40-41-43-45	41-43-45-46	42-44-46-48
	External finish		White Munsell 0.70Y 8.59/0.97		
	Dimension	W : mm	1310	1620	
		D : mm	680		
		H : mm	270		
		W : inch	51-9/16	63-3/4	
		D : inch	26-3/4		
		H : inch	10-5/8		
	Weight	kg	37	43	45
		lbs	82	95	99
	Unit drain pipe I.D.	mm	26		
		inch	1		
Outdoor unit	Air flow	CMM	100		
		CFM	3,530		
	Sound level at cooling	dB(A)	49	50	
	Sound level at heating	dB(A)	51	52	
	External finish		Ivory Munsell 3Y 7.8/1.1		
	Dimension	W : mm	950		
		D : mm	330+30		
		H : mm	1350		
		W : inch	37-3/8		
		D : inch	13 + 1-3/16		
		H : inch	53-1/8		
	Weight	kg	121		
		lbs	267		
Refrigerant pipe size	Gas side O.D.	mm	15.88		
		inch	5/8		
	Liquid side O.D.	mm	9.52		
		inch	3/8		
Refrigerant pipe length	Height difference	m	Max. 30		
	Length	m	Max. 75		

NOTE:

1. Rating conditions (ISO T1)
   Cooling Indoor : D.B. 27℃ (80˚F) W.B. 19℃ (66˚F) Outdoor : D.B. 35℃ (95˚F) W.B. 24℃ (75˚F)
   Heating Indoor : D.B. 20℃ (68˚F) Outdoor : D.B. 7℃ (45˚F) W.B. 6℃ (43˚F)
   Refrigerant piping length (one way) : 5m (16ft.)
2. Guaranteed operating range

		Indoor	Outdoor
Cooling	Upper limit	D.B. 35˚C, W.B. 22.5˚C	D.B. 46℃
	Lower limit	D.B. 19˚C, W.B. 15˚C	D.B. -5℃ ※
Heating	Upper limit	D.B. 28˚C	D.B. 21℃, W.B. 15℃
	Lower limit	D.B. 17˚C	D.B. -20℃, W.B. -20℃

3. Guaranteed voltage
   198~264V, 50Hz
4. Above data based on indicated voltage
   Indoor unit Single phase 230V 50Hz
   Outdoor unit Single phase 230V 50Hz

※ If optional Air protect guide installed. D.B.-15℃

Model name	Indoor unit		PCA-RP100GA	PCA-RP125GA	PCA-RP140GA
	Outdoor unit		PUHZ-RP100YHA	PUHZ-RP125YHA	PUHZ-RP140YHA
Cooling	Capacity	Btu/h	34,100	42,700	47,800
		kW	10.0(4.9-11.4)	12.5(5.5-14.0)	14.0(5.5-15.3)
	Total input	kW	2.92	3.89	4.96
	EER		3.42	3.21	2.82
	Energy label class		A	A	C
	SHF		0.75	0.77	0.74
Heating	Capacity	Btu/h	38,200	47,800	54,600
		kW	11.2(4.5-14.0)	14.0(5.0-16.0)	16.0(5.0-18.0)
	Total input	kW	3.26	4.34	4.60
	COP		3.44	3.23	3.48
	Energy label class		B	C	B
	Booster heater	kW	-	-	-
Power supply	Phase	ϕ	3		
	Cycle	Hz	50		
	Voltage	V	400		
	Breaker size	A	16		
Indoor unit	Air flow	CMM	20-21-23-25	27-30-32-34	
	(Low-Medium2-Medium1-High)	CFM	705-840-810-885	955-1060-1130-1200	
	External pressure	Pa	0	0	
	Sound level (Low-Medium2-Medium1-High)	dB(A)	40-41-43-45	41-43-45-46	42-44-46-48
	External finish		White Munsell 0.70Y 8.59/0.97		
	Dimension	W : mm	1310	1620	
		D : mm	680		
		H : mm	270		
		W : inch	51-9/16	63-3/4	
		D : inch	26-3/4		
		H : inch	10-5/8		
	Weight	kg	37	43	45
		lbs	82	95	99
	Unit drain pipe I.D.	mm	26		
		inch	1		
Outdoor unit	Air flow	CMM	100		
		CFM	3,530		
	Sound level at cooling	dB(A)	49	50	
	Sound level at heating	dB(A)	51	52	
	External finish		Ivory Munsell 3Y 7.8/1.1		
	Dimension	W : mm	950		
		D : mm	330+30		
		H : mm	1350		
		W : inch	37-3/8		
		D : inch	13 + 1-3/16		
		H : inch	53-1/8		
	Weight	kg	135		
		lbs	298		
Refrigerant pipe size	Gas side O.D.	mm	15.88		
		inch	5/8		
	Liquid side O.D.	mm	9.52		
		inch	3/8		
Refrigerant pipe length	Height difference	m	Max. 30		
	Length	m	Max. 75		

NOTE:

1. Rating conditions (ISO T1)
   Cooling Indoor : D.B. 27℃ (80˚F) W.B. 19℃ (66˚F) Outdoor : D.B. 35℃ (95˚F) W.B. 24℃ (75˚F)
   Heating Indoor : D.B. 20℃ (68˚F) Outdoor : D.B. 7℃ (45˚F) W.B. 6℃ (43˚F)
   Refrigerant piping length (one way) : 5m (16ft.)
2. Guaranteed operating range

		Indoor	Outdoor
Cooling	Upper limit	D.B. 35˚C, W.B. 22.5˚C	D.B. 46℃
	Lower limit	D.B. 19˚C, W.B. 15˚C	D.B. -5℃ ※
Heating	Upper limit	D.B. 28˚C	D.B. 21℃, W.B. 15℃
	Lower limit	D.B. 17˚C	D.B. -20℃, W.B. -20℃

3. Guaranteed voltage
   198~264V, 50Hz
4. Above data based on indicated voltage
   Indoor unit Single phase 230V 50Hz
   Outdoor unit Single phase 230V 50Hz

※ If optional Air protect guide installed. D.B.-15℃

Model name	Indoor unit		PCA-RP71HA	PCA-RP125HA	PCA-RP125HA
	Outdoor unit		PUHZ-RP71VHA	PUHZ-RP125VHA	PUHZ-RP125YHA
Cooling	Capacity	Btu/h	24,200	42,700	42,700
		kW	7.1(3.3-8.1)	12.5(5.5-14.0)	12.5(5.5-14.0)
	Total input	kW	2.21	4.15	4.15
	EER		3.21	3.01	3.01
	Energy label class		A	B	B
	SHF		0.74	0.77	0.77
Heating	Capacity	Btu/h	27,300	47,800	47,800
		kW	8.0(3.5-10.2)	14.0(5.0-16.0)	14.0(5.0-16.0)
	Total input	kW	2.49	4.25	4.25
	COP		3.21	3.29	3.29
	Energy label class		C	C	C
	Booster heater	kW	-	-	-
Power supply	Phase	ϕ	1		3
	Cycle	Hz	50		50
	Voltage	V	230		400
	Breaker size	A	25	32	16
Indoor unit	Air flow	CMM	17-19	30-38	
	(Low-High)	CFM	600-670	1060-1350	
	External pressure	Pa	0	0	
	Sound level (Low-High)	dB(A)	34-38	44-50	
	External finish		Stainless steel		
	Dimension	W : mm	1136	1520	
		D : mm	650		
		H : mm	280		
		W : inch	44-3/4	59-7/8	
		D : inch	25-5/8		
		H : inch	11		
	Weight	kg	41	56	
		lbs	90	124	
	Unit drain pipe I.D.	mm	26		
		inch	1		
Outdoor unit	Air flow	CMM	55	100	
		CFM	1,940	3,530	
	Sound level at cooling	dB(A)	47	50	
	Sound level at heating	dB(A)	48	52	
	External finish		Ivory Munsell 3Y 7.8/1.1		
	Dimension	W : mm	950	950	
		D : mm	330+30	330+30	
		H : mm	943	1350	
		W : inch	37-3/8	37-3/8	
		D : inch	13 + 1-3/16	13 + 1-3/16	
		H : inch	37-1/8	53-1/8	
	Weight	kg	75	121	135
		lbs	165	267	298
Refrigerant pipe size	Gas side O.D.	mm	15.88	15.88	
		inch	5/8	5/8	
	Liquid side O.D.	mm	9.52	9.52	
		inch	3/8	3/8	
Refrigerant pipe length	Height difference	m	Max. 30	Max. 30	
	Length	m	Max. 50	Max. 75	

NOTE:

1. Rating conditions (ISO T1)
   Cooling Indoor : D.B. 27℃ (80˚F) W.B. 19℃ (66˚F) Outdoor : D.B. 35℃ (95˚F) W.B. 24℃ (75˚F)
   Heating Indoor : D.B. 20℃ (68˚F) Outdoor : D.B. 7℃ (45˚F) W.B. 6℃ (43˚F)
   Refrigerant piping length (one way) : 5m (16ft.)
2. Guaranteed operating range

		Indoor	Outdoor
Cooling	Upper limit	D.B. 35˚C, W.B. 22.5˚C	D.B. 46˚C
	Lower limit	D.B. 19˚C, W.B. 15˚C	D.B. -5˚C ※1
Heating	Upper limit	D.B. 28˚C	D.B. 21˚C, W.B. 15˚C
	Lower limit	D.B. 17˚C	D.B. -11˚C, W.B. -12˚C ※2

3. Guaranteed voltage
   198~264V, 50Hz
4. Above data based on indicated voltage
   Indoor unit Single phase 230V 50Hz
   Outdoor unit Single phase 230V 50Hz

※1. If optional Air protect guide installed. D.B.-15℃
※2. For RP125 D.B. -20℃, W.B. -20℃

2-5. FLOOR STANDING TYPE

Model name	Indoor unit		PSA-RP71GA
	Outdoor unit		PUHZ-RP71VHA
Cooling	Capacity	Btu/h	24,200
		kW	7.1(3.3-8.1)
	Total input	kW	2.20
	EER		3.23
	Energy label class		A
	SHF		0.73
Heating	Capacity	Btu/h	27,300
		kW	8.0(3.5-10.2)
	Total input	kW	2.49
	COP		3.21
	Energy label class		C
	Booster heater	kW	-
Power supply	Phase	ϕ	1
	Cycle	Hz	50
	Voltage	V	230
	Breaker size	A	25
Indoor unit	Air flow	CMM	15-18
	(Low-High)	CFM	530-635
	External pressure	Pa	0
	Sound level (Low-High)	dB(A)	40-45
	External finish		White Munsell 0.70Y 8.59/0.97
	Dimension	W : mm	600
		D : mm	270
		H : mm	1900
		W : inch	23-5/8
		D : inch	10-5/8
		H : inch	74-13/16
	Weight	kg	43
		lbs	98
	Unit drain pipeO.D.	mm	20
		inch	13/16
Outdoor unit	Air flow	CMM	55
		CFM	1,940
	Sound level at cooling	dB(A)	47
	Sound level at heating	dB(A)	48
	External finish		Ivory Munsell 3Y 7.8/1.1
	Dimension	W : mm	950
		D : mm	330+30
		H : mm	943
		W : inch	37-3/8
		D : inch	13 + 1-3/16
		H : inch	37-1/8
	Weight	kg	75
		lbs	165
Refrigerant pipe size	Gas side O.D.	mm	15.88
		inch	5/8
	Liquid side O.D.	mm	9.52
		inch	3/8
Refrigerant pipe length	Height difference	m	Max. 30
	Length	m	Max. 50

NOTE:

1. Rating conditions (ISO T1)
   Cooling Indoor : D.B. 27℃ (80˚F) W.B. 19℃ (66˚F) Outdoor : D.B. 35℃ (95˚F) W.B. 24℃ (75˚F)
   Heating Indoor : D.B. 20℃ (68˚F) Outdoor : D.B. 7℃ (45˚F) W.B. 6℃ (43˚F)
   Refrigerant piping length (one way) : 5m (16ft.)
2. Guaranteed operating range

		Indoor	Outdoor
Cooling	Upper limit	D.B. 35˚C, W.B. 22.5˚C	D.B. 46˚C
	Lower limit	D.B. 19˚C, W.B. 15˚C	D.B. -5˚C ※
Heating	Upper limit	D.B. 28˚C	D.B. 21˚C, W.B. 15˚C
	Lower limit	D.B. 17˚C	D.B. -11˚C, W.B. -12˚C

3. Guaranteed voltage
   198~264V, 50Hz
4. Above data based on indicated voltage
   Indoor unit Single phase 230V 50Hz
   Outdoor unit Single phase 230V 50Hz

※ If optional Air protect guide installed. D.B.-15℃

Model name	Indoor unit		PSA-RP100GA	PSA-RP125GA	PSA-RP140GA
	Outdoor unit		PUHZ-RP100VHA	PUHZ-RP125VHA	PUHZ-RP140VHA
Cooling	Capacity	Btu/h	34,100	42,700	47,800
		kW	10.0(4.9-11.4)	12.5(5.5-14.0)	14.0(5.5-15.3)
	Total input	kW	2.99	4.15	4.98
	EER		3.34	3.01	2.81
	Energy label class		A	B	C
	SHF		0.81	0.75	0.73
Heating	Capacity	Btu/h	38,200	47,800	54,600
		kW	11.2(4.5-14.0)	14.0(5.0-16.0)	16.0(5.0-18.0)
	Total input	kW	3.28	4.36	4.98
	COP		3.41	3.21	3.21
	Energy label class		B	C	C
	Booster heater	kW	-	-	-
Power supply	Phase	ϕ	1		
	Cycle	Hz	50		
	Voltage	V	230		
	Breaker size	A	32		40
Indoor unit	Air flow	CMM	24-31	26-33	27-35
	(Low-High)	CFM	850-1060	920-1165	955-1240
	External pressure	Pa	0		
	Sound level (Low-High)	dB(A)	44-49	46-51	47-52
	External finish		White Munsell 0.70Y 8.59/0.97		
	Dimension	W : mm	600		
		D : mm	350		
		H : mm	1900		
		W : inch	23-5/8		
		D : inch	13-3/4		
		H : inch	74-13/16		
	Weight	kg	51		53
		lbs	112		117
	Unit drain pipeO.D.	mm	20		
		inch	13/16		
Outdoor unit	Air flow	CMM	100		
		CFM	3,530		
	Sound level at cooling	dB(A)	49	50	
	Sound level at heating	dB(A)	51	52	
	External finish		Ivory Munsell 3Y 7.8/1.1		
	Dimension	W : mm	950		
		D : mm	330+30		
		H : mm	1350		
		W : inch	37-3/8		
		D : inch	13 + 1-3/16		
		H : inch	53-1/8		
	Weight	kg	121		
		lbs	267		
Refrigerant pipe size	Gas side O.D.	mm	15.88		
		inch	5/8		
	Liquid side O.D.	mm	9.52		
		inch	3/8		
Refrigerant pipe length	Height difference	m	Max. 30		
	Length	m	Max. 75		

NOTE:

1. Rating conditions (ISO T1)
   Cooling Indoor : D.B. 27℃ (80˚F) W.B. 19℃ (66˚F) Outdoor : D.B. 35℃ (95˚F) W.B. 24℃ (75˚F)
   Heating Indoor : D.B. 20℃ (68˚F) Outdoor : D.B. 7℃ (45˚F) W.B. 6℃ (43˚F)
   Refrigerant piping length (one way) : 5m (16ft.)
2. Guaranteed operating range

		Indoor	Outdoor
Cooling	Upper limit	D.B. 35˚C, W.B. 22.5˚C	D.B. 46℃
	Lower limit	D.B. 19˚C, W.B. 15˚C	D.B. -5℃ ※
Heating	Upper limit	D.B. 28˚C	D.B. 21℃, W.B. 15℃
	Lower limit	D.B. 17˚C	D.B. -20℃, W.B. -20℃

3. Guaranteed voltage
   198~264V, 50Hz
4. Above data based on indicated voltage
   Indoor unit Single phase 230V 50Hz
   Outdoor unit Single phase 230V 50Hz

※ If optional Air protect guide installed. D.B.-15℃

Model name	Indoor unit		PSA-RP100GA	PSA-RP125GA	PSA-RP140GA
	Outdoor unit		PUHZ-RP100YHA	PUHZ-RP125YHA	PUHZ-RP140YHA
Cooling	Capacity	Btu/h	34,100	42,700	47,800
		kW	10.0(4.9-11.4)	12.5(5.5-14.0)	14.0(5.5-15.3)
	Total input	kW	2.99	4.15	4.98
	EER		3.34	3.01	2.81
	Energy label class		A	B	C
	SHF		0.81	0.75	0.73
Heating	Capacity	Btu/h	38,200	47,800	54,600
		kW	11.2(4.5-14.0)	14.0(5.0-16.0)	16.0(5.0-18.0)
	Total input	kW	3.28	4.36	4.98
	COP		3.41	3.21	3.21
	Energy label class		B	C	C
	Booster heater	kW	-	-	-
Power supply	Phase	ϕ	3		
	Cycle	Hz	50		
	Voltage	V	400		
	Breaker size	A	16		
Indoor unit	Air flow	CMM	24-31	26-33	27-35
	(Low-High)	CFM	850-1060	920-1165	955-1240
	External pressure	Pa	0		
	Sound level (Low-High)	dB(A)	44-49	46-51	47-52
	External finish		White Munsell 0.70Y 8.59/0.97		
	Dimension	W : mm	600		
		D : mm	350		
		H : mm	1900		
		W : inch	23-5/8		
		D : inch	13-3/4		
		H : inch	74-13/16		
	Weight	kg	51	51	53
		lbs	112	112	117
	Unit drain pipe O.D.	mm	20		
		inch	13/16		
Outdoor unit	Air flow	CMM	100		
		CFM	3,530		
	Sound level at cooling	dB(A)	49	50	
	Sound level at heating	dB(A)	51	52	
	External finish		Ivory Munsell 3Y 7.8/1.1		
	Dimension	W : mm	950		
		D : mm	330+30		
		H : mm	1350		
		W : inch	37-3/8		
		D : inch	13 + 1-3/16		
		H : inch	53-1/8		
	Weight	kg	135		
		lbs	298		
Refrigerant pipe size	Gas side O.D.	mm	15.88		
		inch	5/8		
	Liquid side O.D.	mm	9.52		
		inch	3/8		
Refrigerant pipe length	Height difference	m	Max. 30		
	Length	m	Max. 75		

NOTE:

1. Rating conditions (ISO T1)
   Cooling Indoor : D.B. 27℃ (80˚F) W.B. 19℃ (66˚F) Outdoor : D.B. 35℃ (95˚F) W.B. 24℃ (75˚F)
   Heating Indoor : D.B. 20℃ (68˚F) Outdoor : D.B. 7℃ (45˚F) W.B. 6℃ (43˚F)
   Refrigerant piping length (one way) : 5m (16ft.)
2. Guaranteed operating range

		Indoor	Outdoor
Cooling	Upper limit	D.B. 35˚C, W.B. 22.5˚C	D.B. 46℃
	Lower limit	D.B. 19˚C, W.B. 15˚C	D.B. -5℃ ※
Heating	Upper limit	D.B. 28˚C	D.B. 21℃, W.B. 15℃
	Lower limit	D.B. 17˚C	D.B. -20℃, W.B. -20℃

3. Guaranteed voltage
   198~264V, 50Hz
4. Above data based on indicated voltage
   Indoor unit Single phase 230V 50Hz
   Outdoor unit Single phase 230V 50Hz

※ If optional Air protect guide installed. D.B.-15℃

3 OUTLINES AND DIMENSIONS

INDOOR UNIT

Unit : mm

PLA-RP35AA PLA-RP50AA PLA-RP60AA PLA-RP71AA
PLA-RP100AA PLA-RP125AA PLA-RP140AA

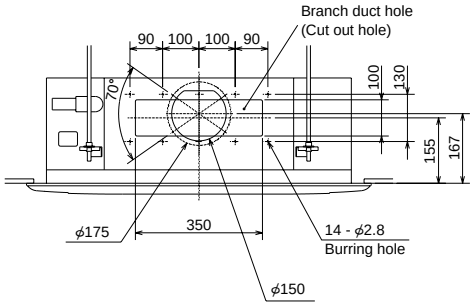

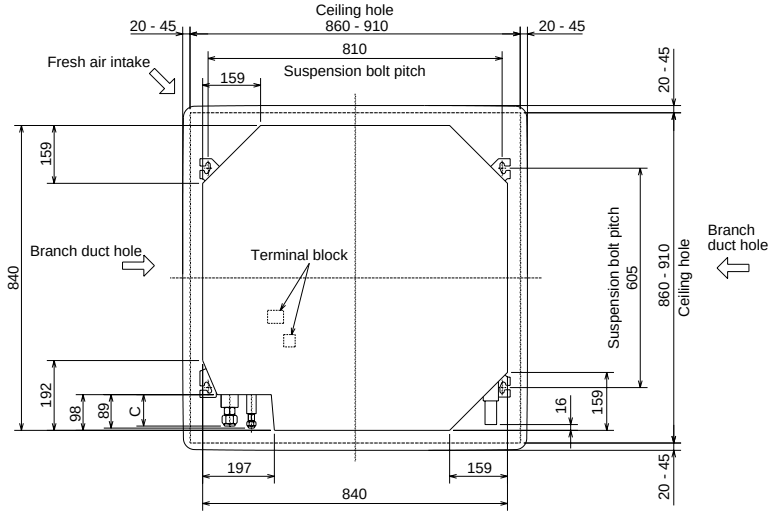

Detail drawing of fresh air intake

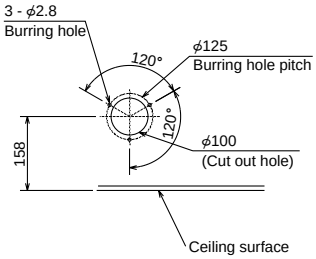

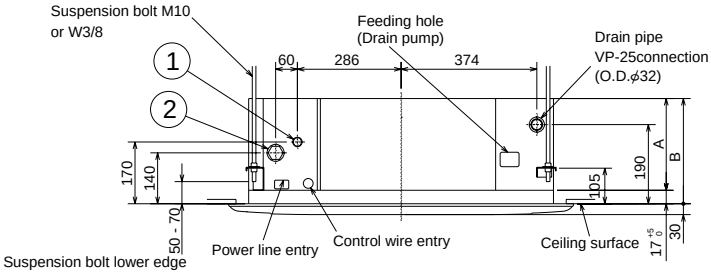

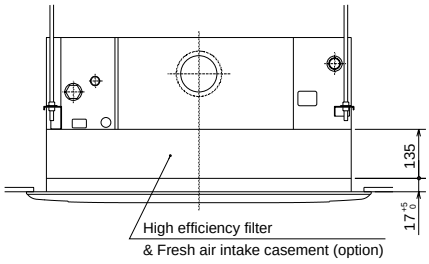

A (WIRELESS PANEL)

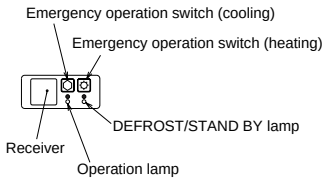

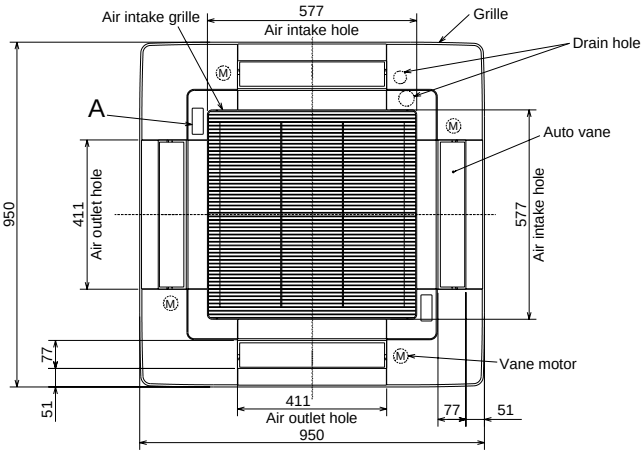

Use the current nuts meeting the pipe size of the outdoor unit.
Available pipe size

	RP35, 50	RP60	RP71	RP100, 125, 140
① LIQUID SIDE	ϕ6.35 ○	ϕ6.35	—	—
	ϕ9.52	ϕ9.52 ○	ϕ9.52 ○	ϕ9.52 ○
② GAS SIDE	ϕ12.7 ○	—	—	—
	ϕ15.88	ϕ15.88 ○	ϕ15.88 ○	ϕ15.88 ○
	—	—	—	ϕ19.05

○ Factory flare nut attachment to the heat-exchanger.

Models	A	B	C
PLA-RP35,50AA PLA-RP60,71AA	241	258	80
PLA-RP100,125,140AA	281	298	84

PEAD-RP35EA
PEAD-RP50EA
PEAD-RP60EA

Unit : mm

Model	A	B	C	D	E	F	G
RP35,50	772	305	–	830	804	R410A Outdoor unit : 6.35 ※ R407C Outdoor unit : 9.52	R410A Outdoor unit : 12.7 ※ R407C Outdoor unit : 15.88
RP60	1012	280	290	1070	1044	Outdoor unit (SUZ) : 6.35 R407C Outdoor unit : 9.52 ※	15.88

※ Setting at shipment

① Refrigerant piping flare connection (liquid ϕ F copper tube):HP
② Refrigerant piping flare connection (gas ϕG copper tube):LP
③ Drain R1(External thread)
④ Electrical parts box
⑤ Drain Pump (Option)
⑥ Drain Pipe (Option) ... Flexible joint VP-25(I.D. ϕ32)) Set
⑦ Filter

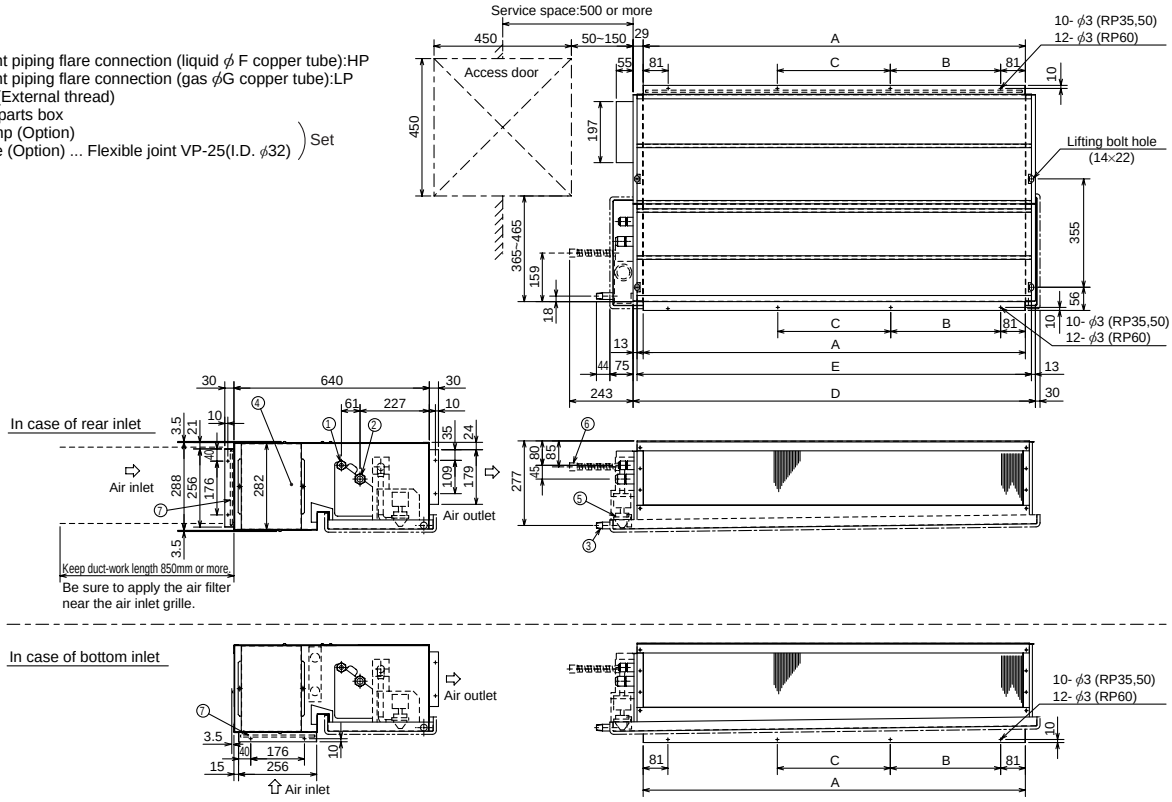

PEAD-RP71EA
PEAD-RP100EA
PEAD-RP125EA
PEAD-RP140EA

Model	A	B	C	D	E	F
RP71	1012	280	290	1070	1044	15.88
RP100,125	1252	360	370	1310	1284	R410A Outdoor unit : 15.88 ※
RP140	1552	460	470	1610	1584	R407C outdoor unit : 19.05

※ Setting at shipment

① Refrigerant piping flare connection (liquid ϕ9.52 copper tube):HP
② Refrigerant piping flare connection (gas ϕF copper tube):LP
③ Drain R1 (External thread)
④ Electrical parts box
⑤ Drain Pump (Option)
⑥ Drain Pipe (Option) ... Flexible joint VP25(I.D.ϕ32)) Set
⑦ Filter

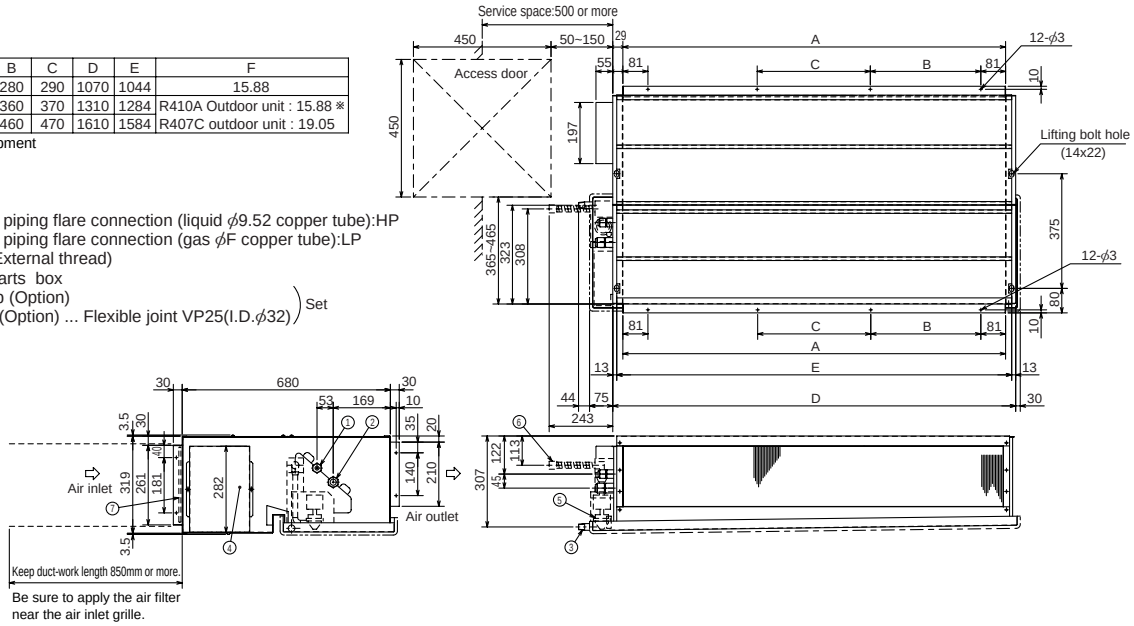

PEAD-RP60GA
PEAD-RP71GA
PEAD-RP100GA

Unit : mm

① Refrigerant piping flare connection(liquid øH copper tube): HP
② Refrigerant piping flare connection(gas ø**J** copper tube): LP
③ Electrical parts box ※
④ Terminal bed : Power source
⑤ Terminal bed : Remote control
⑥ Filter
⑦ Drain pan (R1 External thread: ø34) (※;Fixable to opposition side.)

※ NOTE: IT IS NECESSARY TO REMOVE THE CEILING PARTS OR TO KEEP THE MAINTENANCE HOLE OF OVER UNIT SIZE WHEN YOU HAVE A MAINTENANCE OR SERVICE THE FOLLOWING PARTS.
SERVICE: MOTOR,SIROCCO FAN,HEAT EXCHANGER,DRAIN PAN
(EXCHANGE) FILTER(IN CASE OF INDOOR UNIT HAVE INLET DUCT.)
MAINTENANCE: HEAT EXCHANGER,DRAIN PAN(SURFACE WASHING)
(WASHING) FILTER(IN CASE OF INDOOR UNIT HAVE INLET DUCT.)

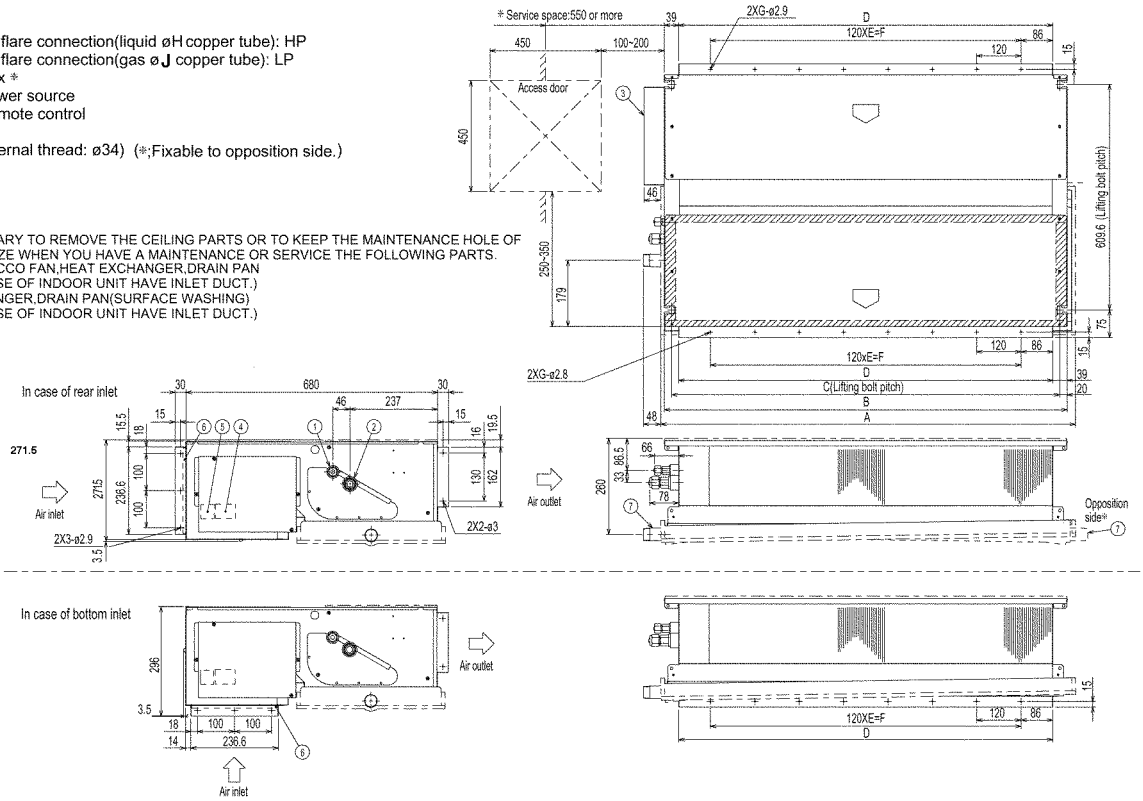

Model	A	B	C	D	E	F	G	H	J
RP60	1125	1090	1050	1012	7	840	8	Outdoor unit(SUZ) : 6.35 Other outdoor unit : 9.52 ※	15.88
RP71	1125	1090	1050	1012	7	840	8	9.52	15.88
RP100	1365	1330	1290	1252	9	1080	10	9.52	R410A Outdoor unit : 15.88 ※ R407C Outdoor unit : 19.05

※ Setting at shipment

PEA-RP71EA

Unit : mm

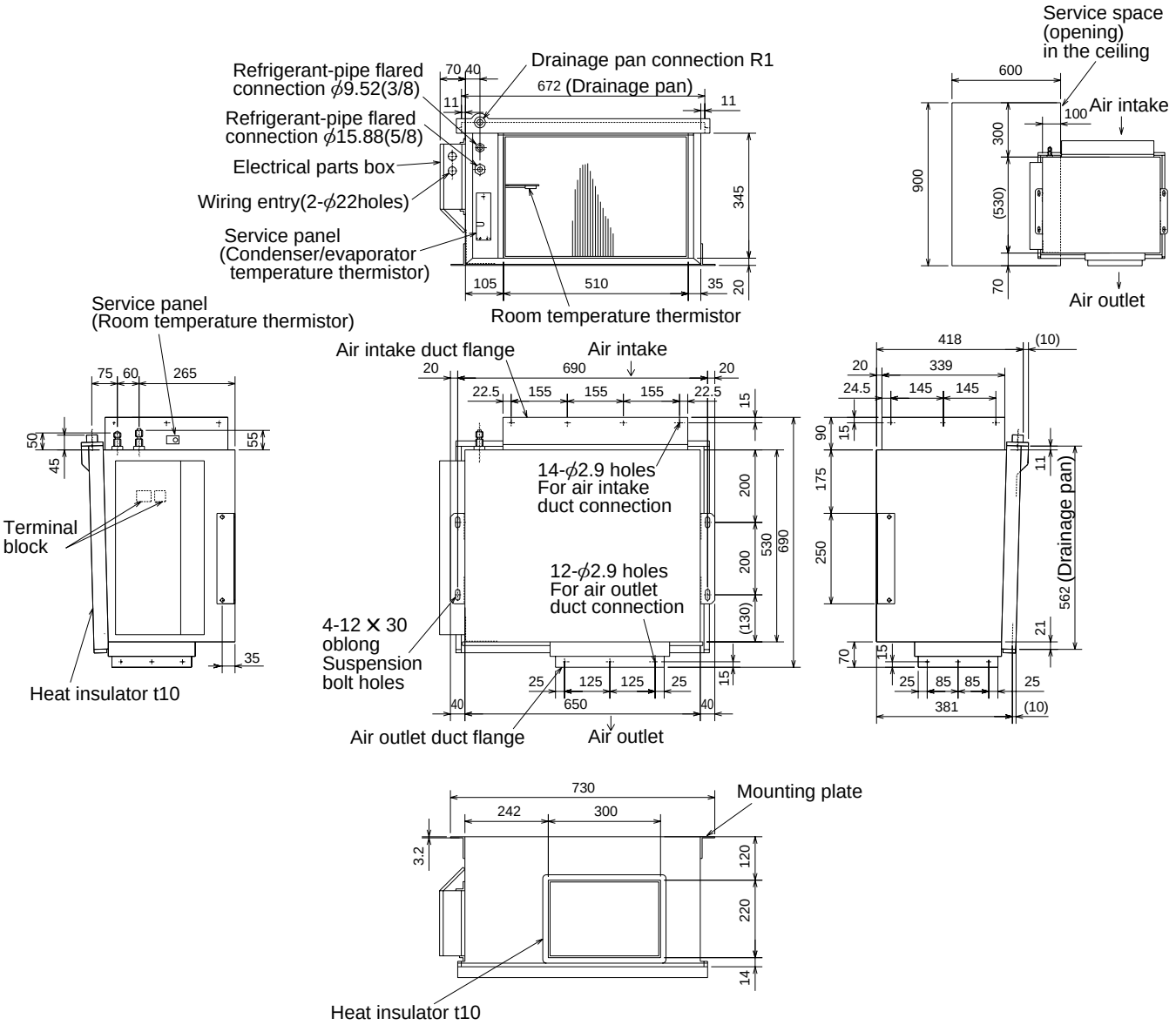

PEA-RP100EA

Unit : mm

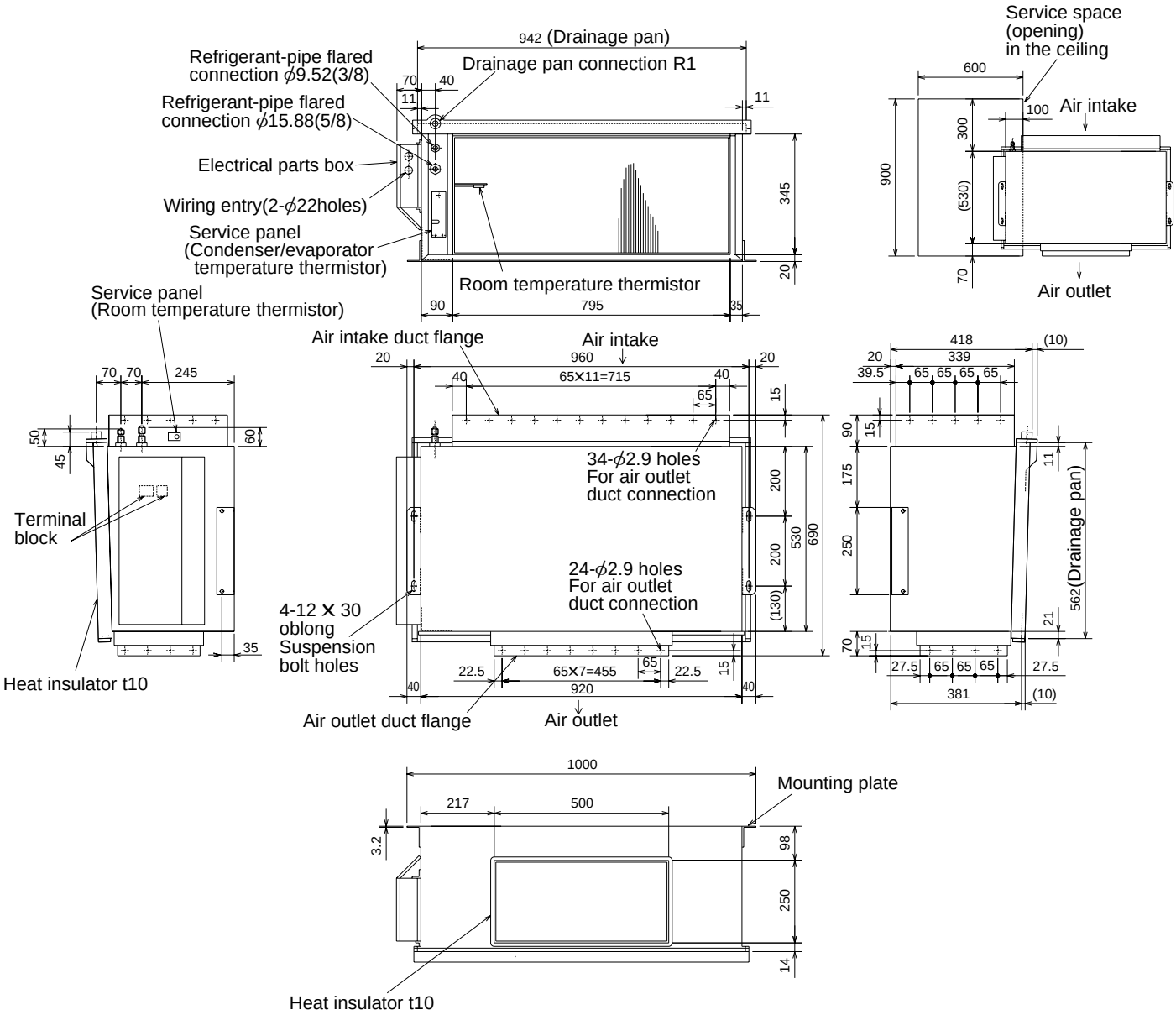

PEA-RP125EA

Unit : mm

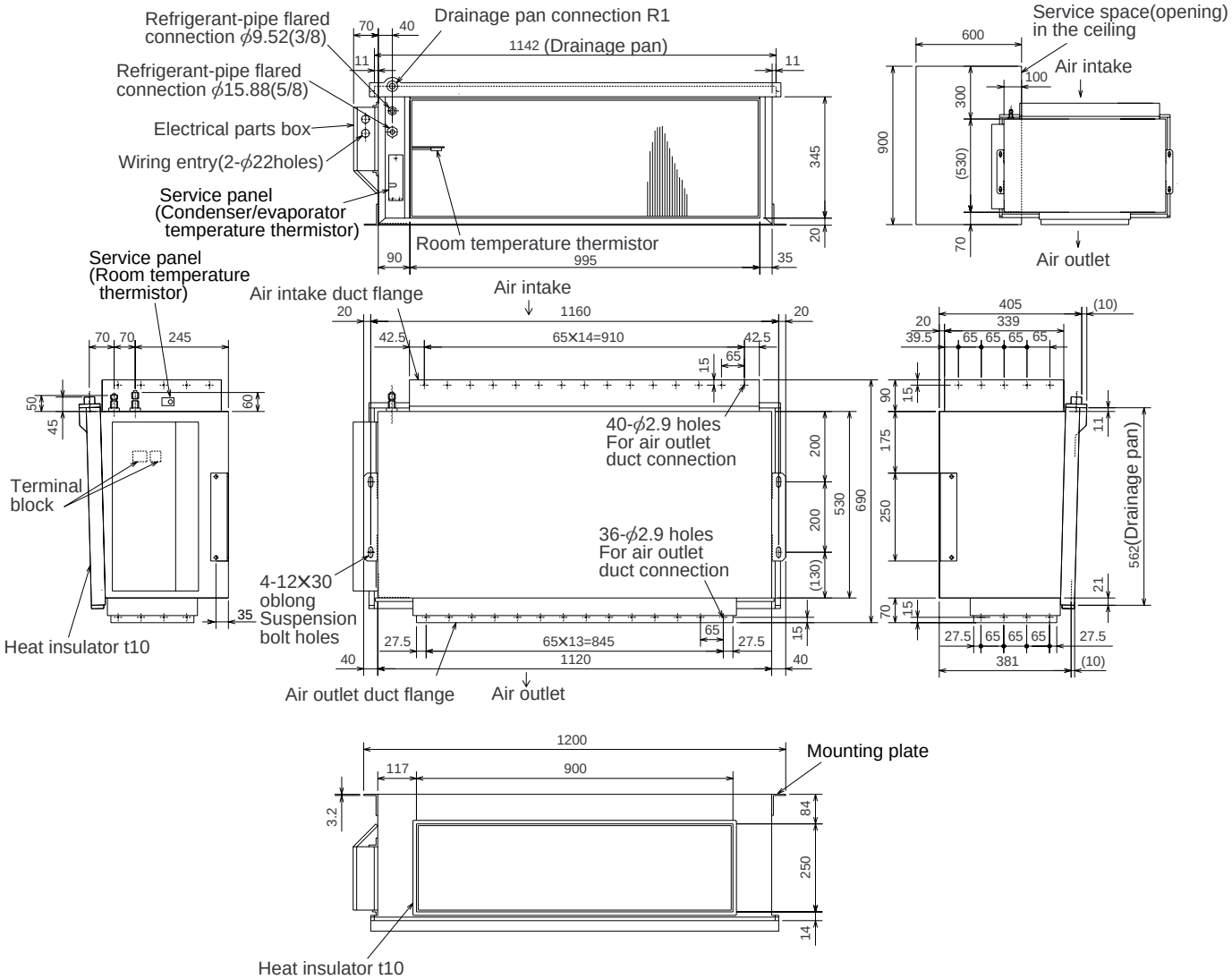

PEA-RP140EA

Unit : mm

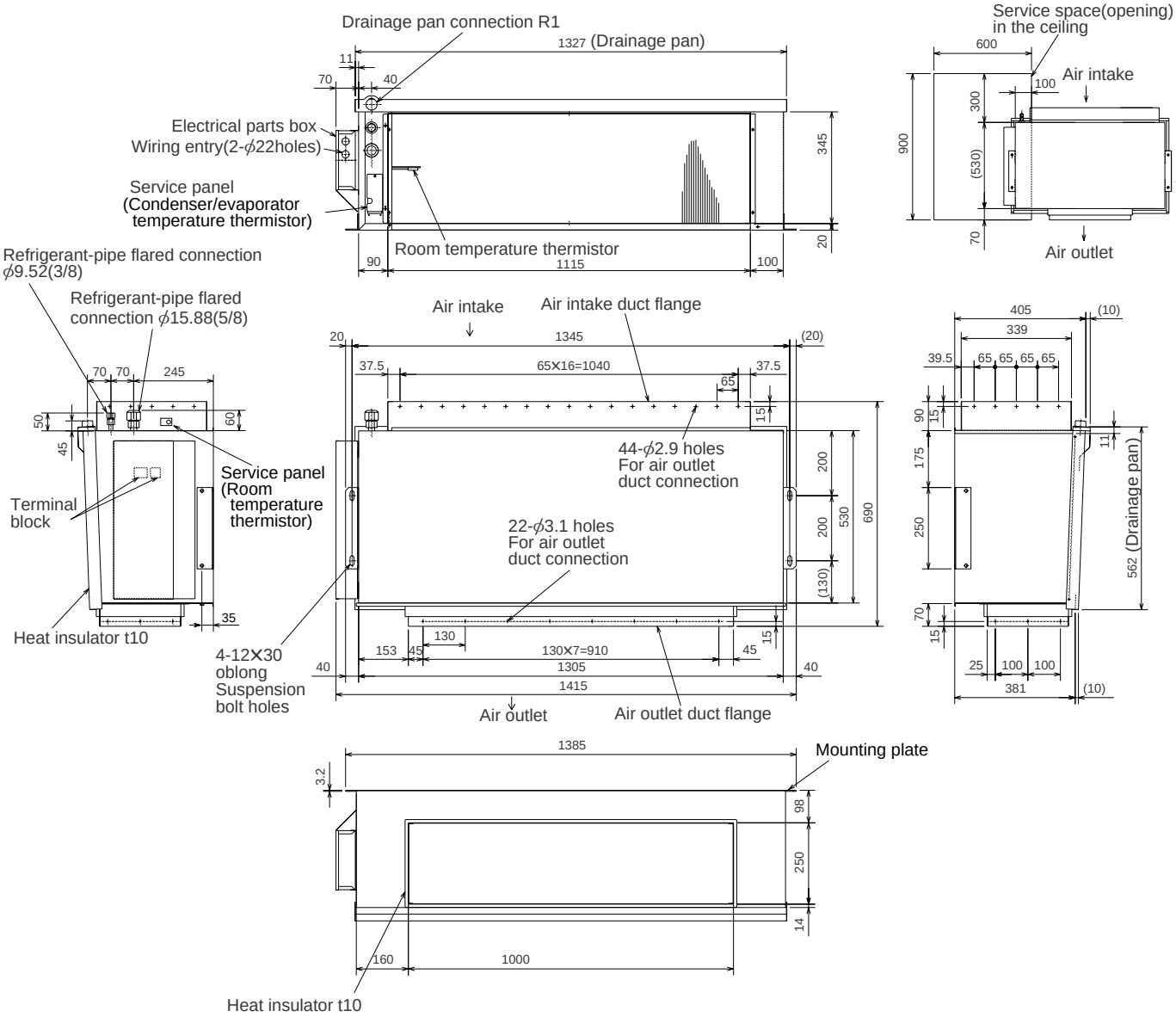

PEH-RP200MYA

Unit : mm

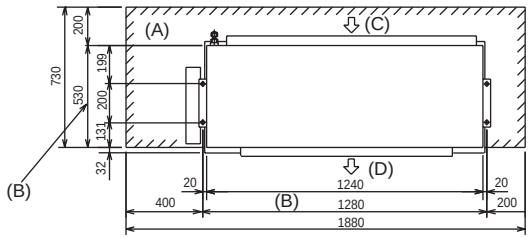

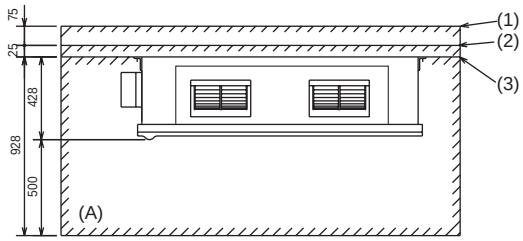

(1) When connecting air inlet
(2) When installing the suspension fixtures prior to installation of the indoor unit without inlet duct
(3) When hanging the indoor unit directly without inlet duct

(A) Service space
(B) Suspension bolt pitch
(C) Air inlet
(D) Air outlet

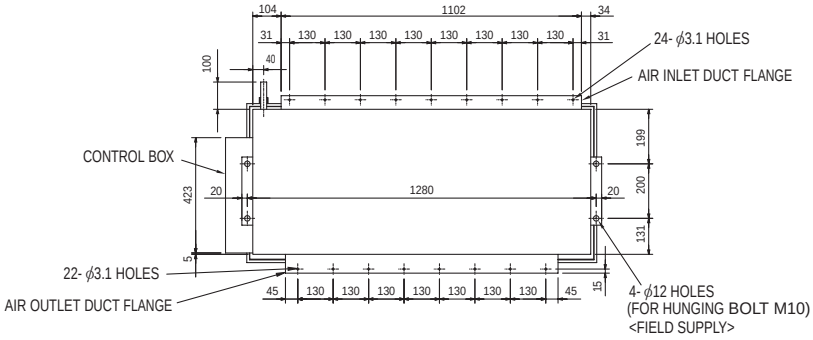

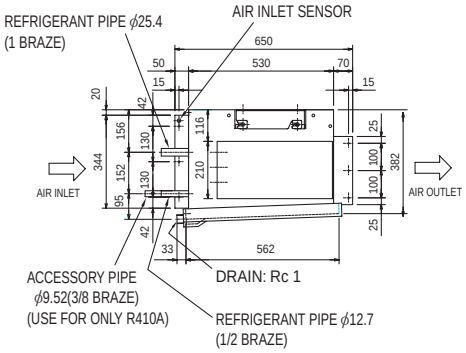

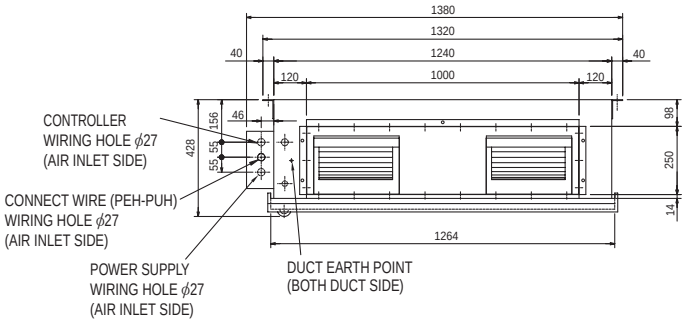

Note: When connecting duct to the inlet side, remove the air filter attached to the unit body, and mount an air filter onto the inlet duct side separately.

PEH-RP250MYA

Unit : mm

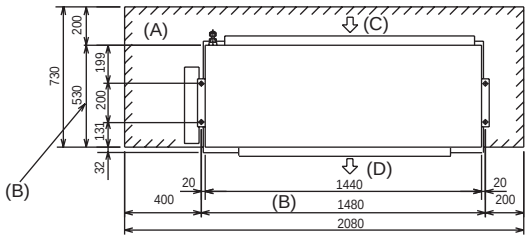

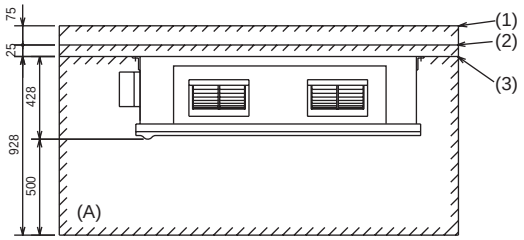

(1) When connecting air inlet
(2) When installing the suspension fixtures prior to installation of the indoor unit without inlet duct
(3) When hanging the indoor unit directly without inlet duct

(A) Service space
(B) Suspension bolt pitch
(C) Air inlet
(D) Air outlet

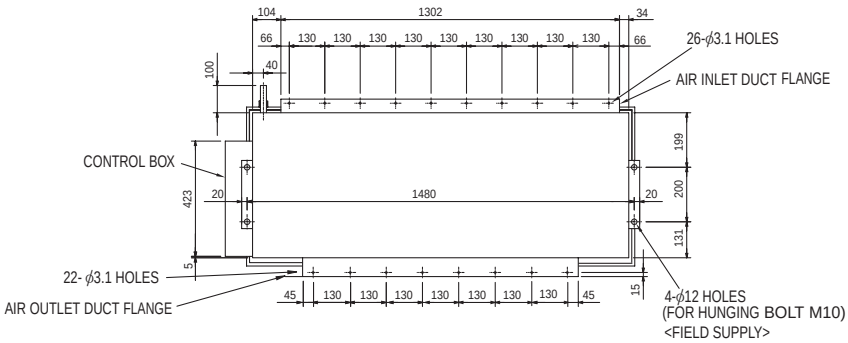

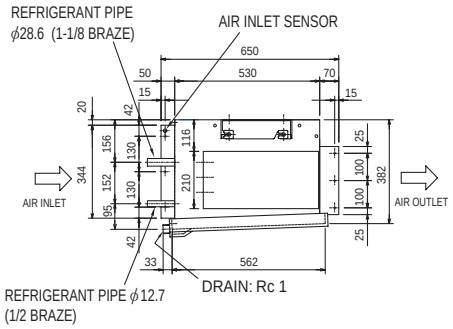

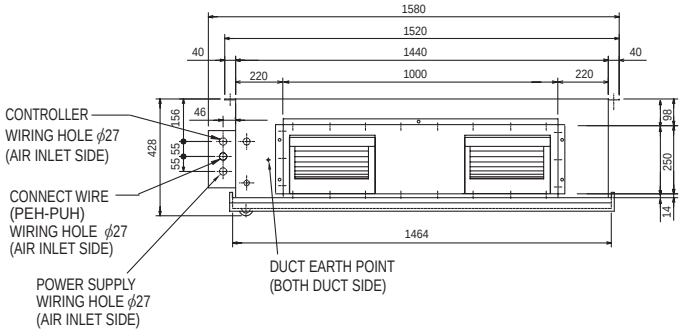

Note: When connecting duct to the inlet side, remove the air filter attached to the unit body, and mount an air filter onto the inlet duct side separately.

INDOOR UNIT
PKA-RP35GAL PKA-RP50GAL

Unit : mm

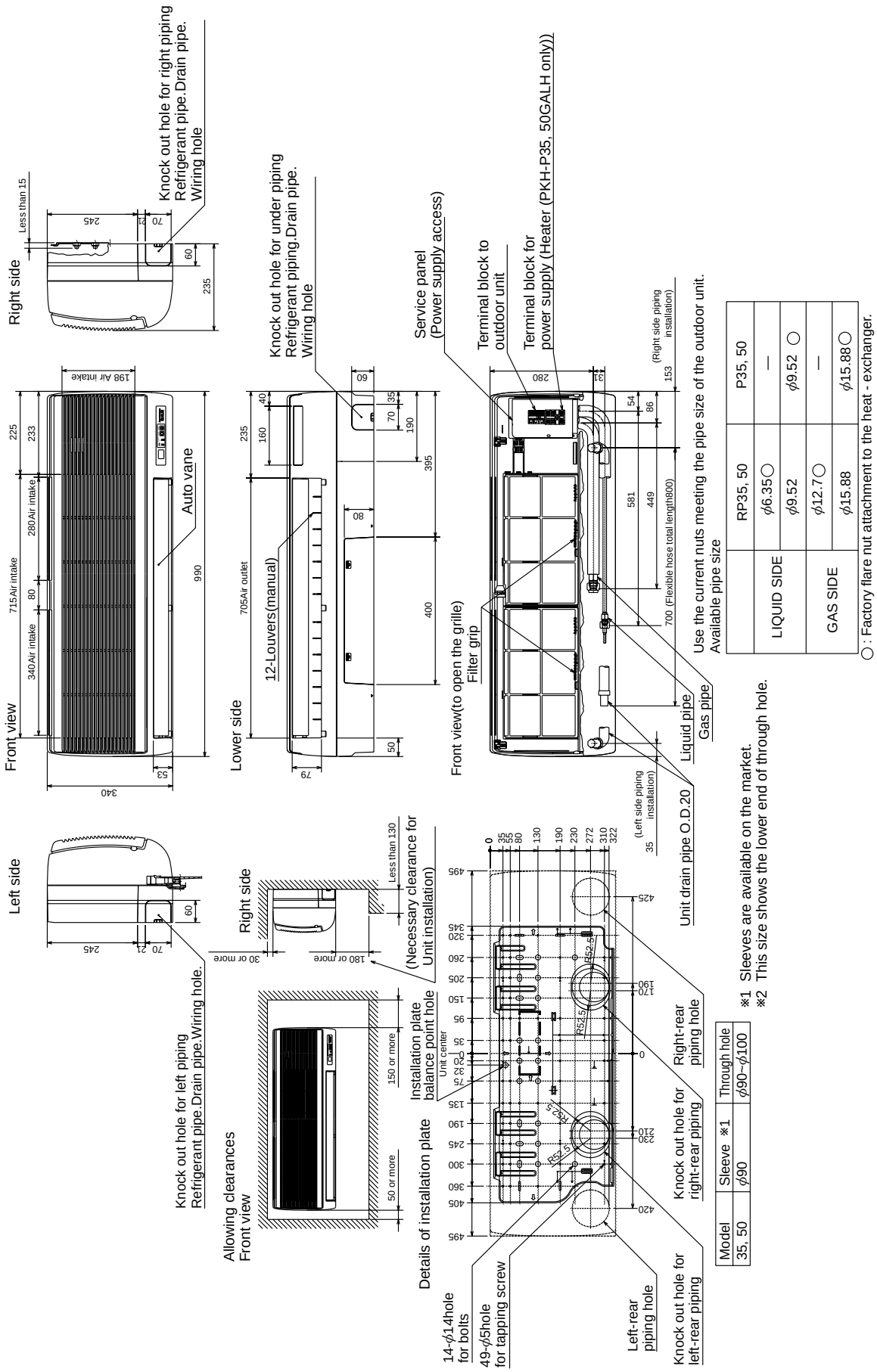

	RP35, 50	P35, 50
LIQUID SIDE	φ6.35○	—
	φ9.52	φ9.52 ○
GAS SIDE	φ12.7○	—
	φ15.88	φ15.88○

○: Factory flare nut attachment to the heat - exchanger.

Model	Sleeve ※1	Through hole
35, 50	φ90	φ90~φ100

※1 Sleeves are available on the market.
※2 This size shows the lower end of through hole.

PKA-RP60FAL
PKA-RP71FAL

Unit : mm

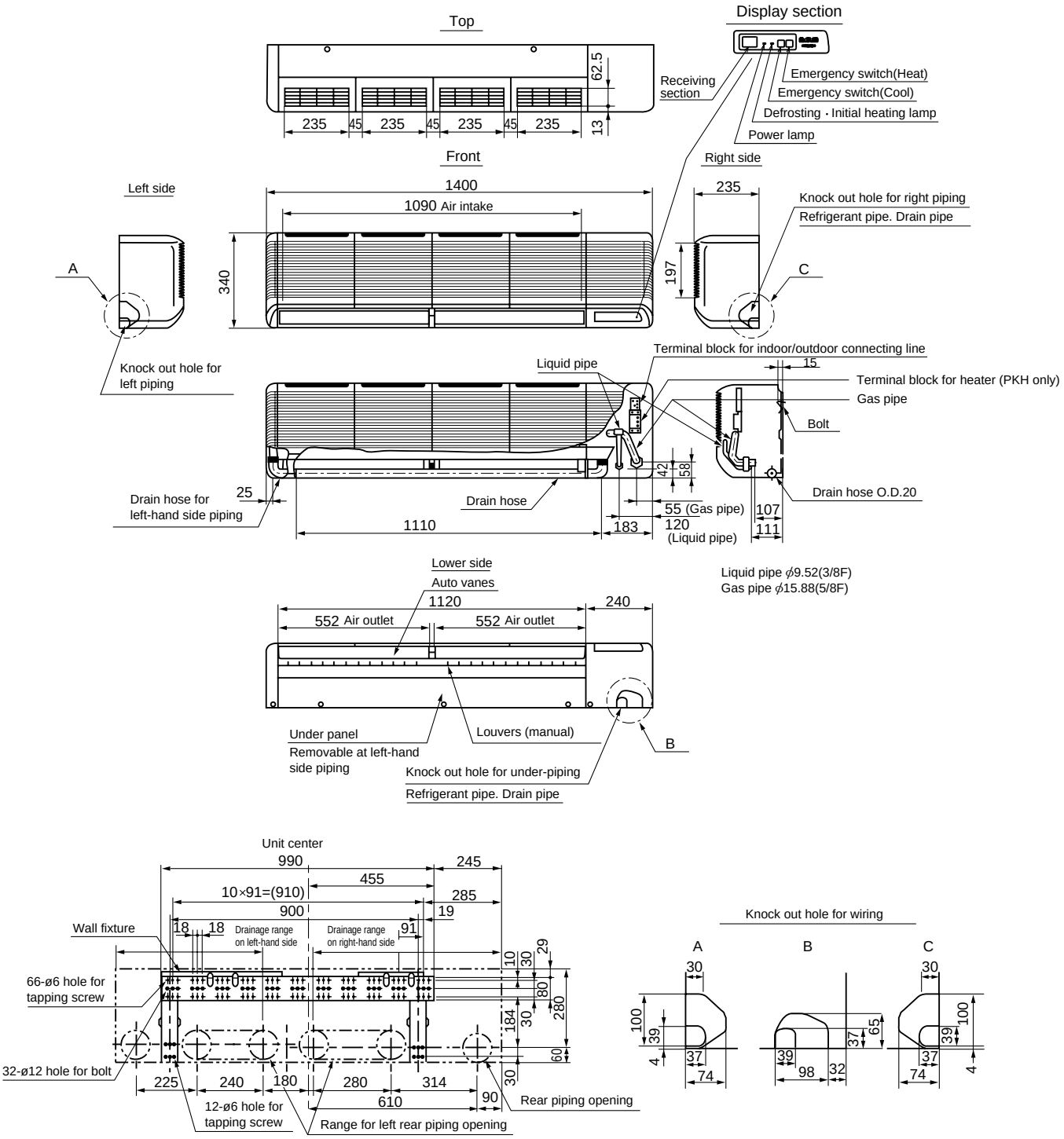

PKA-RP100FAL

Unit : mm

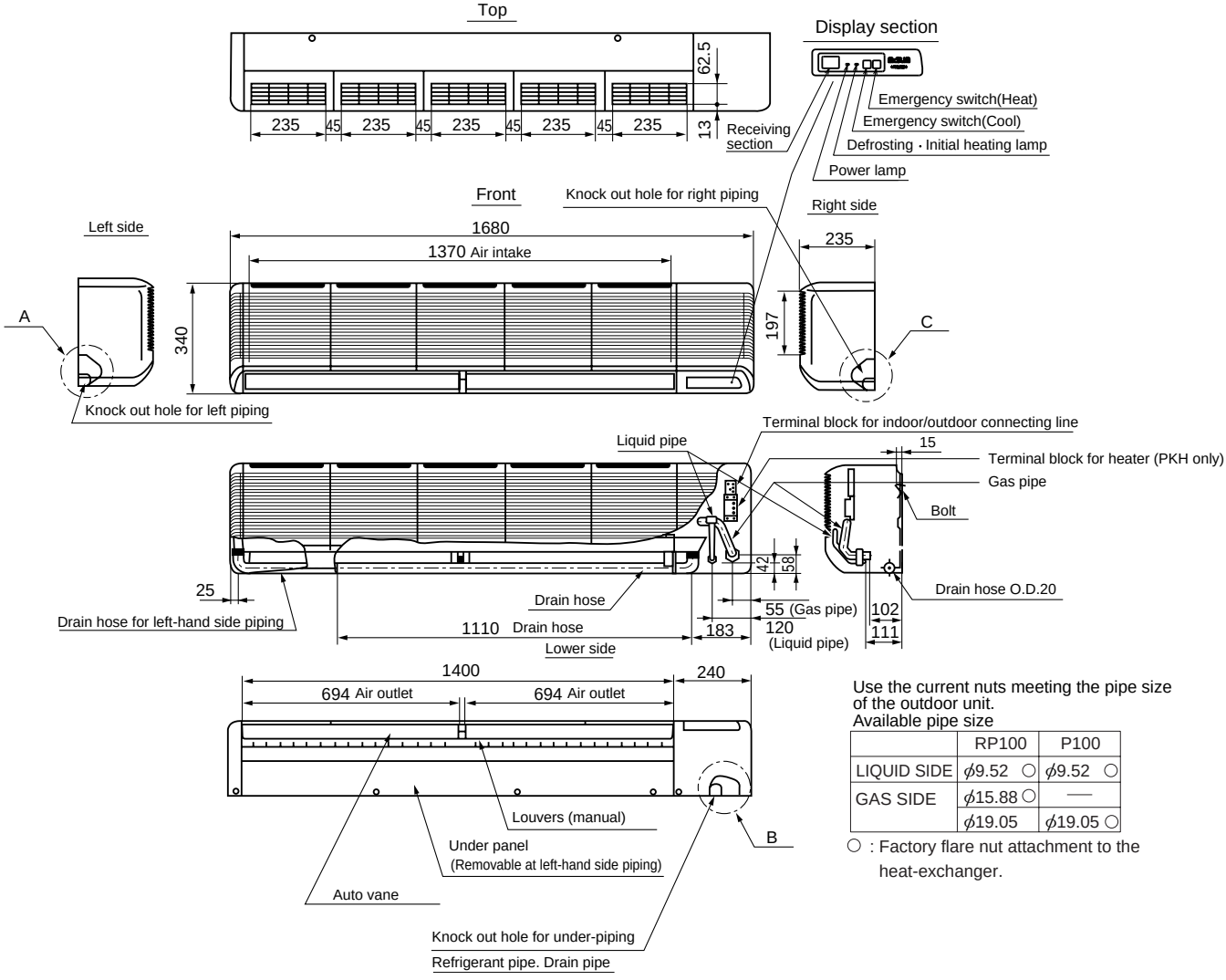

Use the current nuts meeting the pipe size of the outdoor unit.
Available pipe size

	RP100	P100
LIQUID SIDE	ϕ9.52 ○	ϕ9.52 ○
GAS SIDE	ϕ15.88 ○	—
	ϕ19.05	ϕ19.05 ○

○ : Factory flare nut attachment to the heat-exchanger.

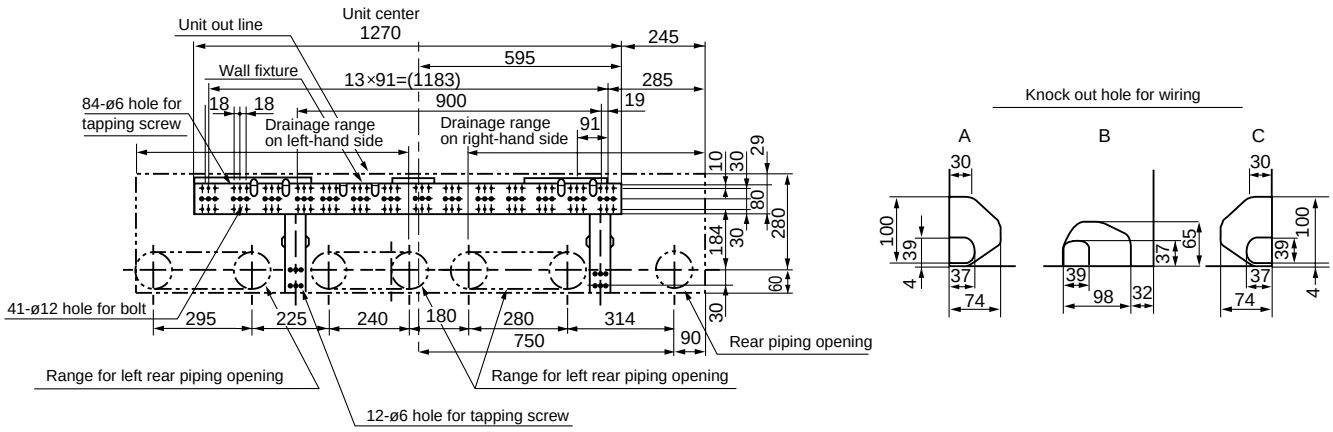

INDOOR UNIT
PCA-RP50GA

Unit : mm

NOTES:
1. Use M10 or W3/8 screws for anchor bolt.
2. When optional drain lift-up mechanism is installed, always provide upward piping for refrigerant piping.

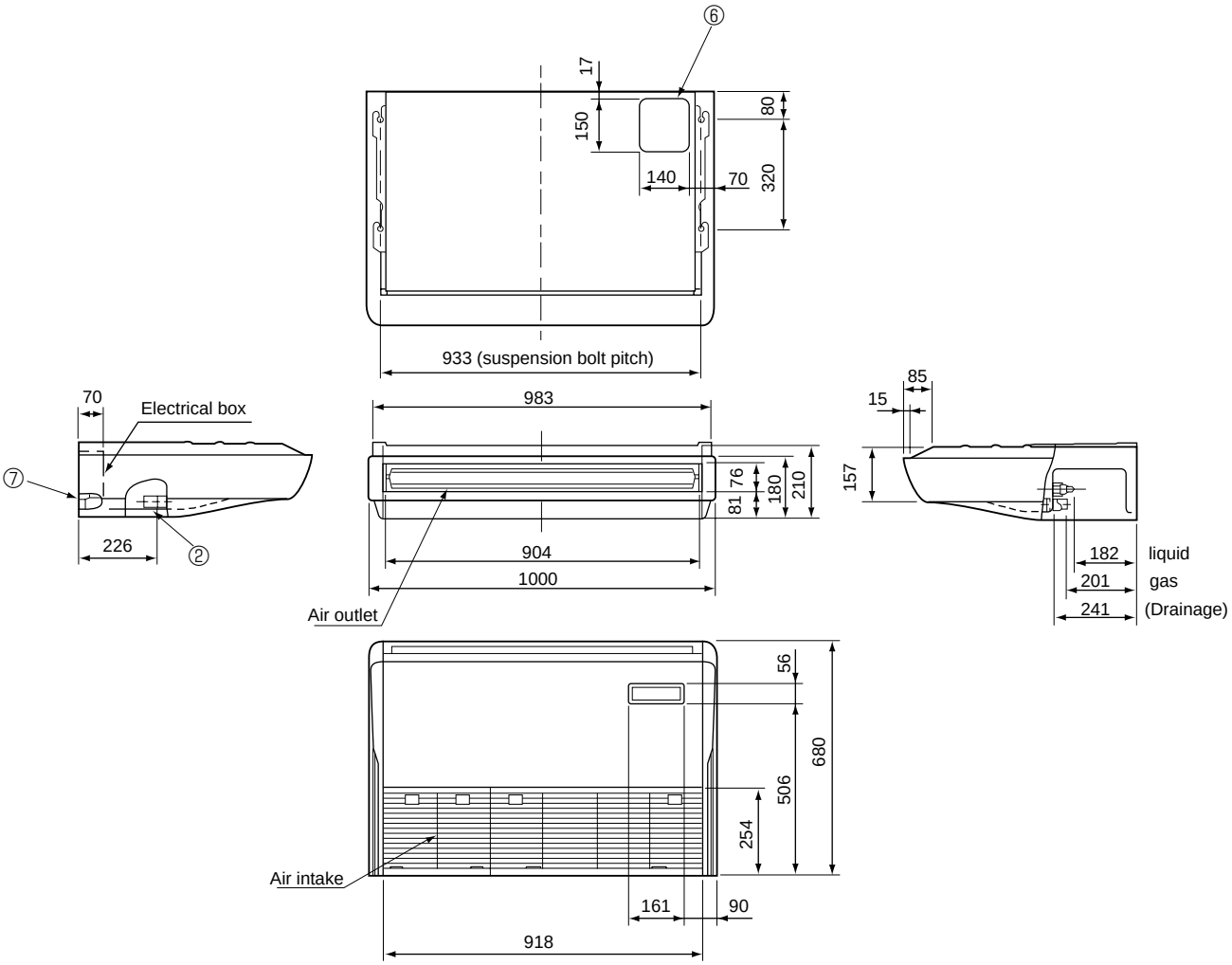

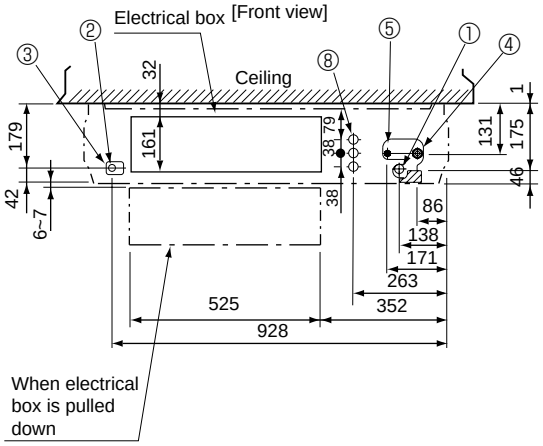

① Drainage pipe connection (26mm I.D.)
② Drainage pipe connection (for the left arrangement)
③ Knock out hole for left drain-piping arrangement
④ Refrigerant-pipe connection (gas pipe side/flared connection)
⑤ Refrigerant-pipe connection (liquid pipe side/flared connection)
⑥ Knock out hole for upper drain pipe arrangement
⑦ Knock out hole for left drain pipe arrangement
⑧ Knock out hole for wiring arrangement

Use the current nuts meeting the pipe size of the outdoor unit.

Available pipe size

	RP50	P50
⑤ LIQUID SIDE	ϕ6.35 ○	—
	ϕ9.52	ϕ9.52 ○
④ GAS SIDE	ϕ12.7 ○	—
	ϕ15.88	ϕ15.88 ○

○ : Factory flare nut attachment to the heat-exchanger.

PCA-RP60GA
PCA-RP71GA

Unit : mm

NOTES:
1. Use M10 or W3/8 screws for anchor bolt.
2. When optional drain lift-up mechanism is installed, always provide upward piping for refrigerant piping.

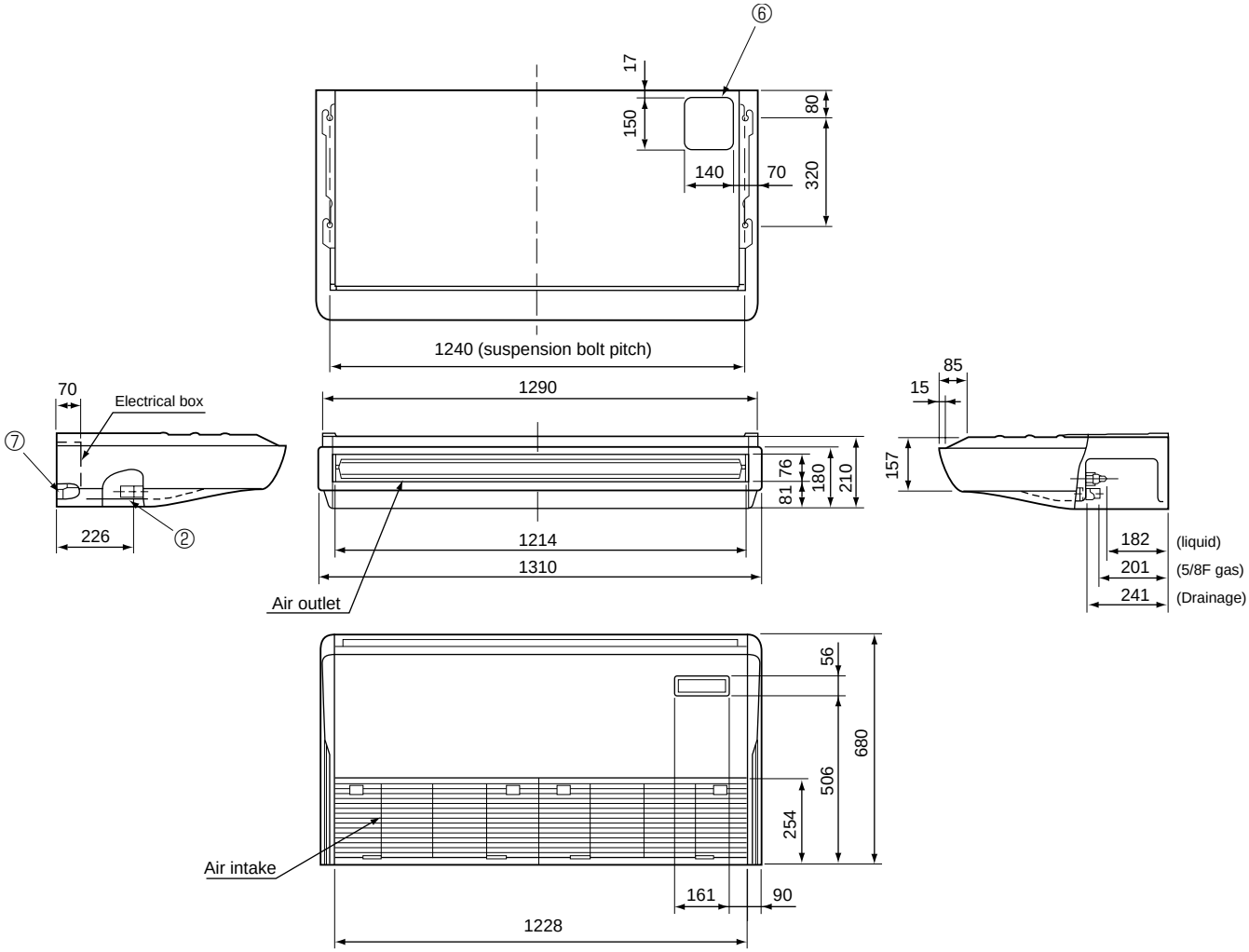

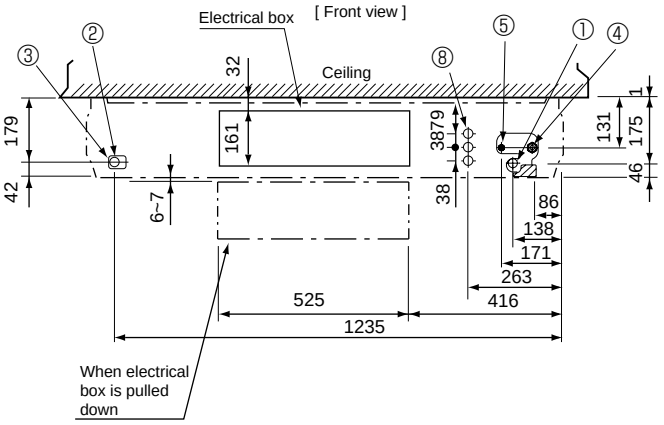

① Drainage pipe connection (26mm I.D.)
② Drainage pipe connection (for the left arrangement)
③ Knock out hole for left drain-piping arrangement
④ Refrigerant-pipe connection (gas pipe side/flared connection)
⑤ Refrigerant-pipe connection (liquid pipe side/flared connection)
⑥ Knock out hole for upper drain pipe arrangement
⑦ Knock out hole for left drain pipe arrangement
⑧ Knock out hole for wiring arrangement

Use the current nuts meeting the pipe size of the outdoor unit.

Available pipe size

	RP60	RP71,P60,P71
⑤ LIQUID SIDE	ϕ6.35	—
	ϕ9.52 ○	ϕ9.52 ○
④ GAS SIDE	—	—
	ϕ15.88 ○	ϕ15.88 ○
	—	—

○ : Factory flare nut attachment to the heat-exchanger.

PCA-RP100GA

Unit : mm

NOTES:
1. Use M10 or W3/8 screws for anchor bolt.
2. When optional drain lift-up mechanism is installed, always provide upward piping for refrigerant piping.

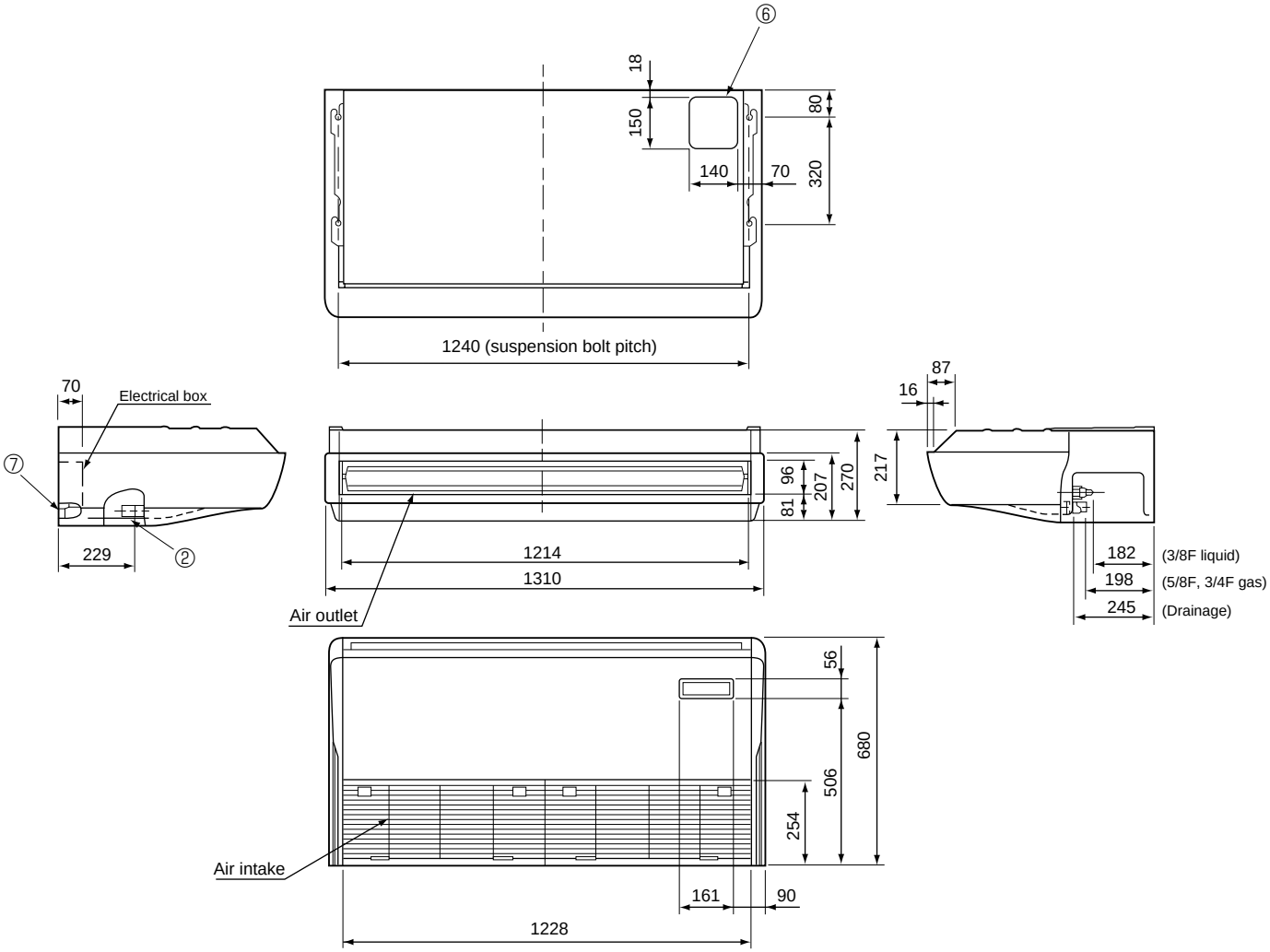

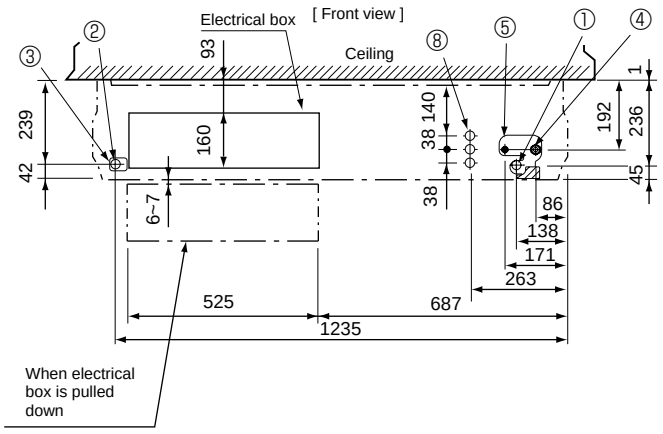

① Drainage pipe connection (26mm I.D.)
② Drainage pipe connection (for the left arrangement)
③ Knock out hole for left drain-piping arrangement
④ Refrigerant-pipe connection (gas pipe side/flared connection)
⑤ Refrigerant-pipe connection (liquid pipe side/flared connection)
⑥ Knock out hole for upper drain pipe arrangement
⑦ Knock out hole for left drain pipe arrangement
⑧ Knock out hole for wiring arrangement

Use the current nuts meeting the pipe size of the outdoor unit.

Available pipe size

	RP100	P100
⑤ LIQUID SIDE	—	—
	ϕ9.52 ○	ϕ9.52 ○
④ GAS SIDE	—	—
	ϕ15.88 ○	—
	ϕ19.05	ϕ19.05 ○

○ :Factory flare nut attachment to the heat-exchanger.

PCA-RP125GA
PCA-RP140GA

Unit : mm

NOTES:
1. Use M10 or W3/8 screws for anchor bolt.
2. When optional drain lift-up mechanism is installed, always provide upward piping for refrigerant piping.

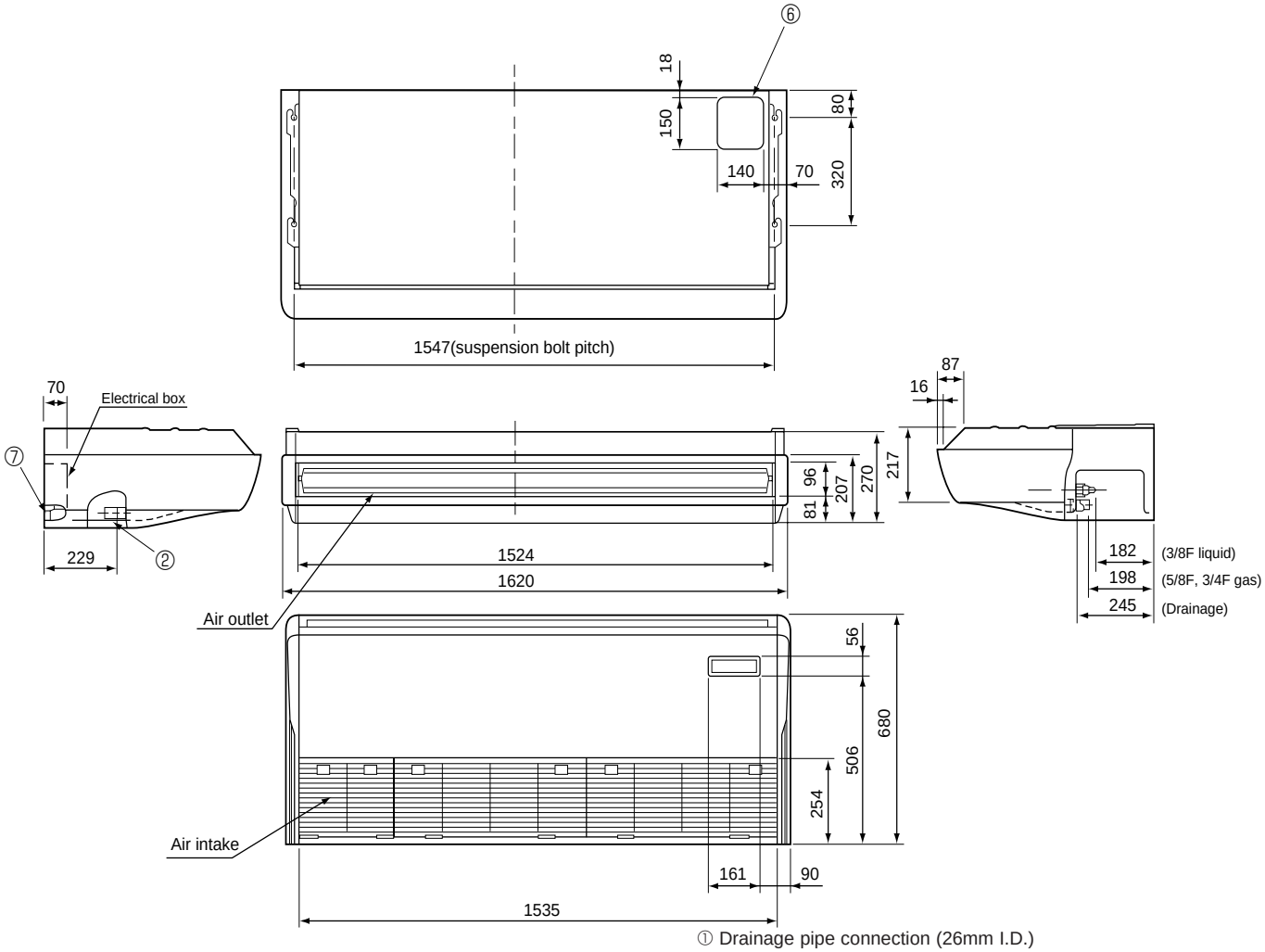

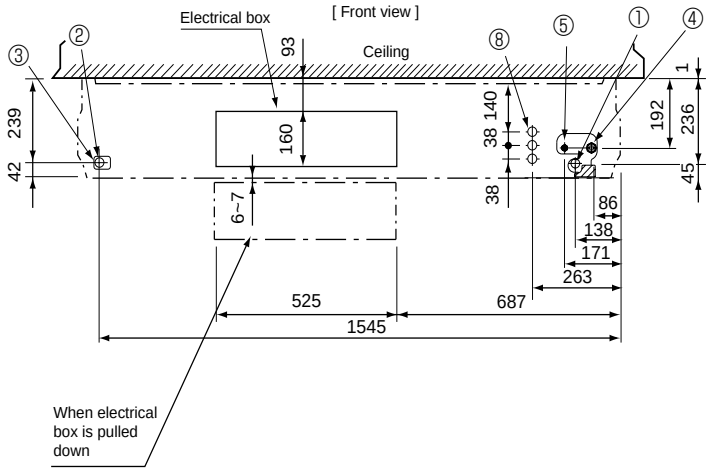

① Drainage pipe connection (26mm I.D.)
② Drainage pipe connection (for the left arrangement)
③ Knock out hole for left drain-piping arrangement
④ Refrigerant-pipe connection (gas pipe side/flared connection)
⑤ Refrigerant-pipe connection (liquid pipe side/flared connection)
⑥ Knock out hole for upper drain pipe arrangement
⑦ Knock out hole for left drain pipe arrangement
⑧ Knock out hole for wiring arrangement

Use the current nuts meeting the pipe size of the outdoor unit.

Available pipe size

	RP125,140	P125,140
⑤ LIQUID SIDE	—	—
	ϕ9.52 ○	ϕ9.52 ○
④ GAS SIDE	—	—
	ϕ15.88○	—
	ϕ19.05	ϕ19.05○

○ :Factory flare nut attachment to the heat-exchanger.

PCA-RP71HA

Unit : mm

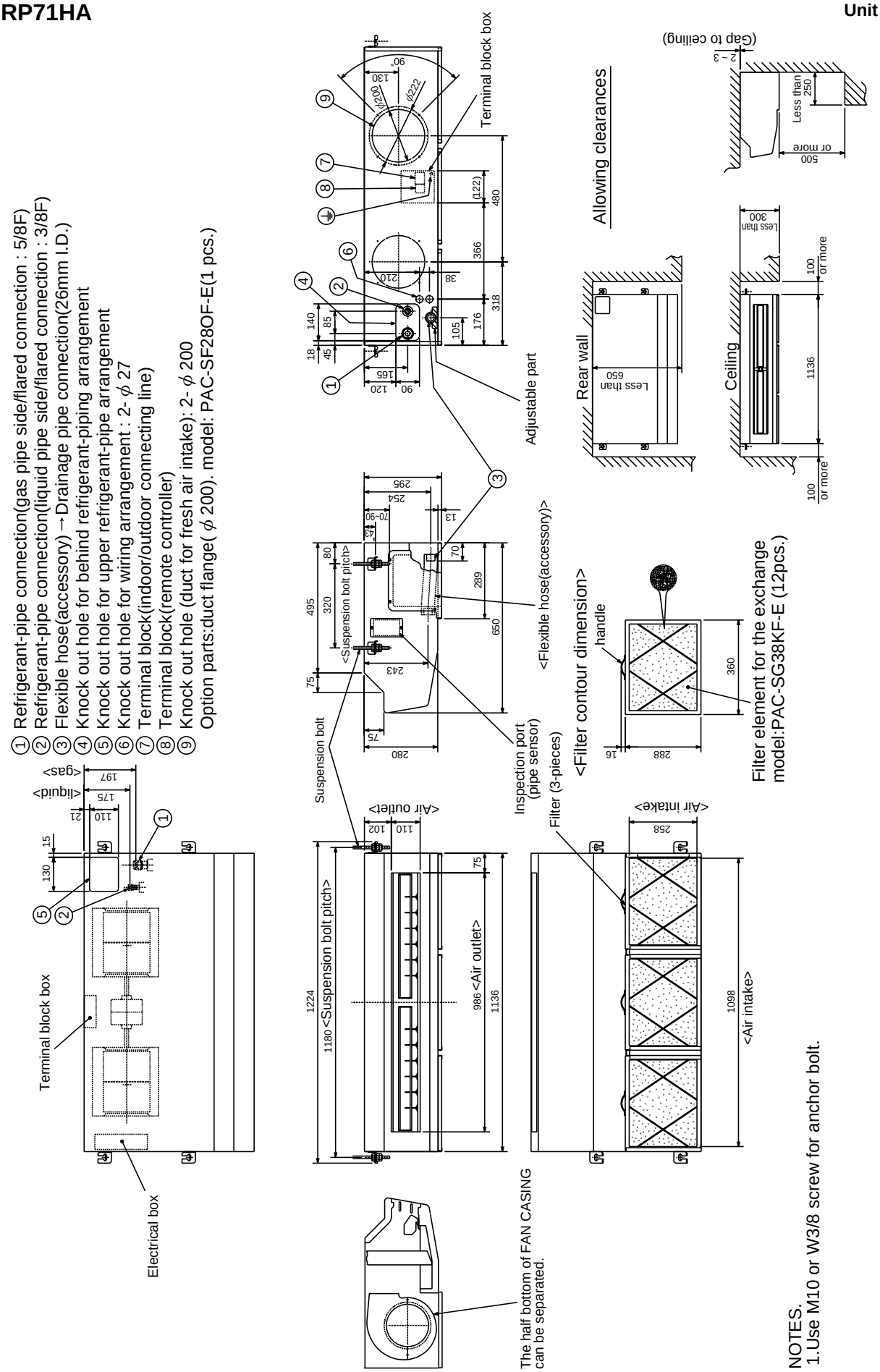

PCA-RP125HA

Unit : mm

① Refrigerant-pipe connection(gas pipe side/flared connection : 5/8F, 3/4F)
② Refrigerant-pipe connection(liquid pipe side/flared connection : 3/8F)
③ Flexible hose(accessory)→Drainage pipe connection(26mm I.D.)
④ Knock out hole for behind refrigerant-piping arrangement
⑤ Knock out hole for upper refrigerant-pipe arrangement
⑥ Knock out hole for wiring arrangement : 2- ϕ 27
⑦ Terminal block(indoor/outdoor connecting line)
⑧ Terminal block(remote controller)
⑨ Knock out hole (duct for fresh air intake) : 2- ϕ 200
Option parts:duct flange(ϕ 200). model: PAC-SF28OF-E(1 pcs.)

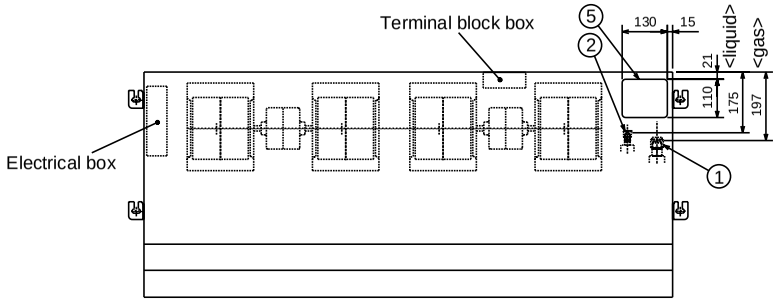

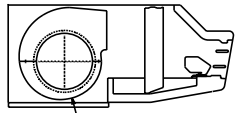

The half bottom of FAN CASING can be separated.

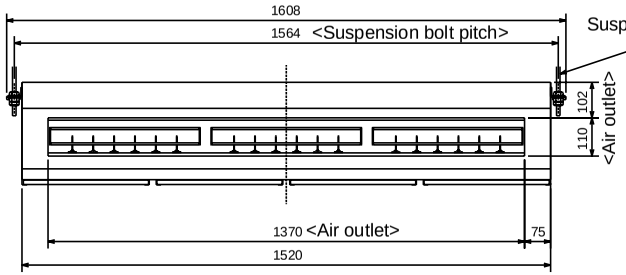

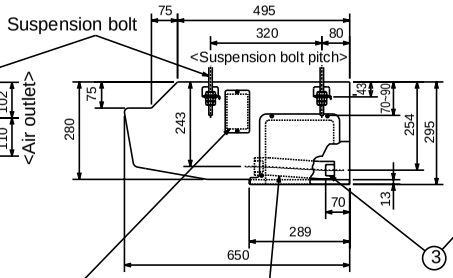

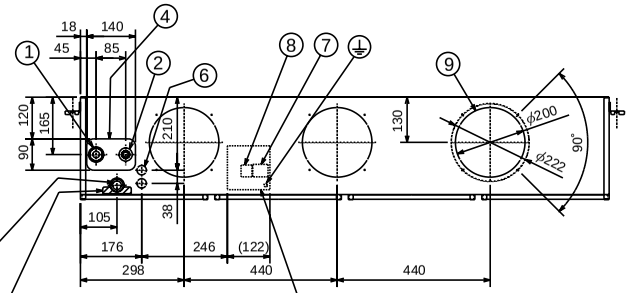

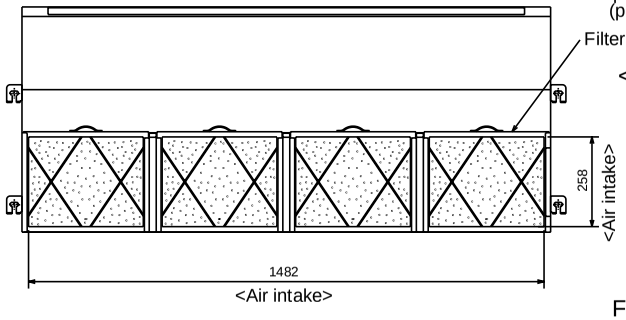

<Filter contour dimension>

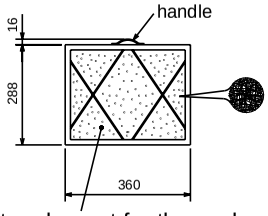

Filter element for the exchange
model:PAC-SG38KF-E (12pcs.)

Allowing clearances

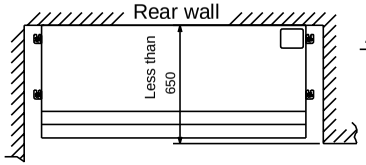

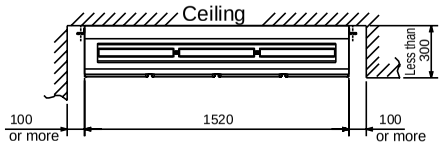

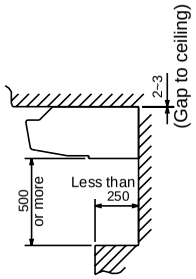

NOTES.
1.Use M10 or W3/8 screw for anchor bolt.

Use the current nuts meeting the pipe size of the outdoor unit.

Available pipe size

	RP125
② LIQUID SIDE	ϕ 9.52 ○
① GAS SIDE	ϕ 15.88 ○
	ϕ 19.05

○: Factry flare nut attachment to the heat-exchanger

PSA-RP71GA

Unit : mm

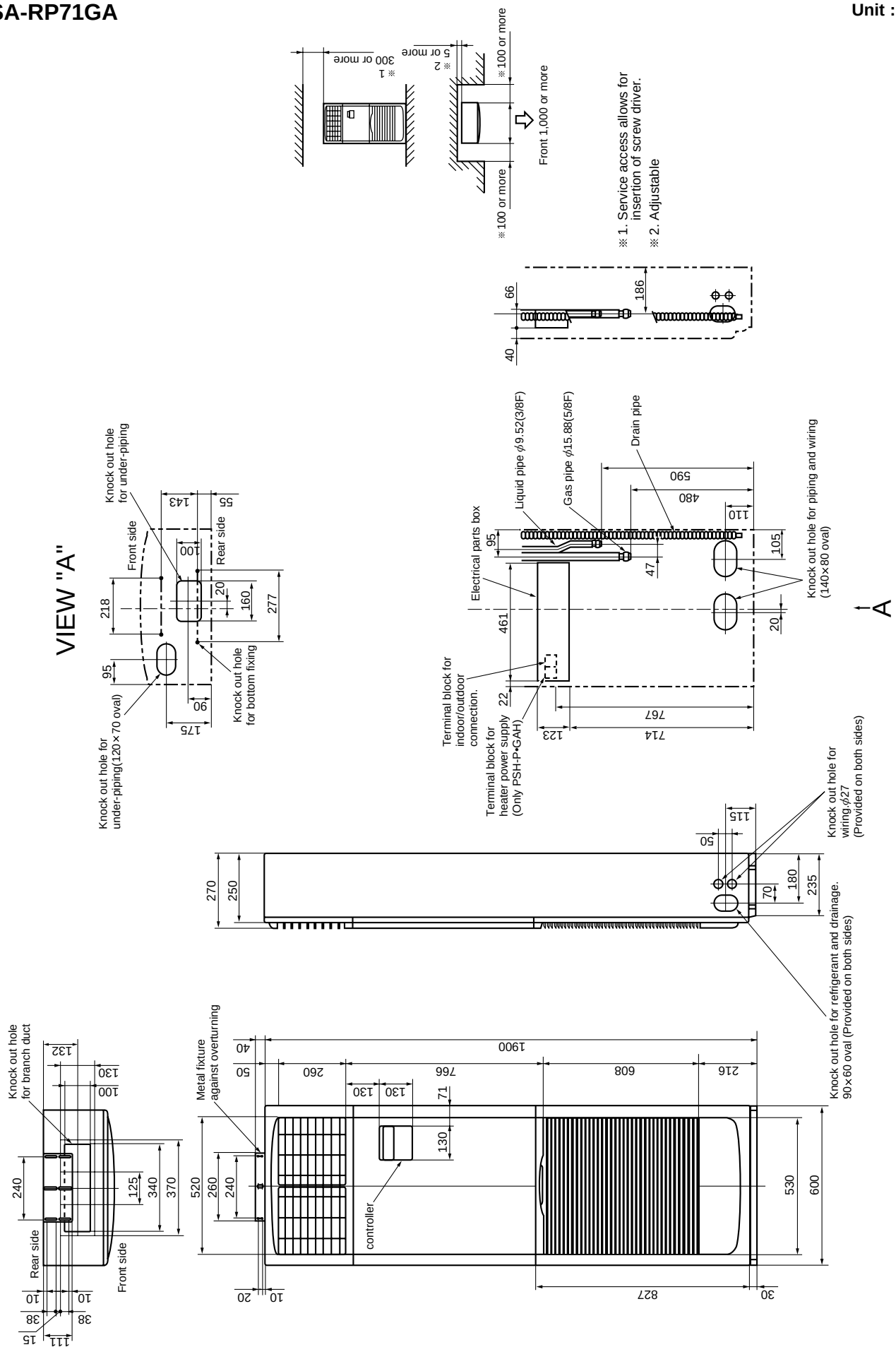

PSA-RP100GA
PSA-RP125GA
PSA-RP140GA

Unit : mm

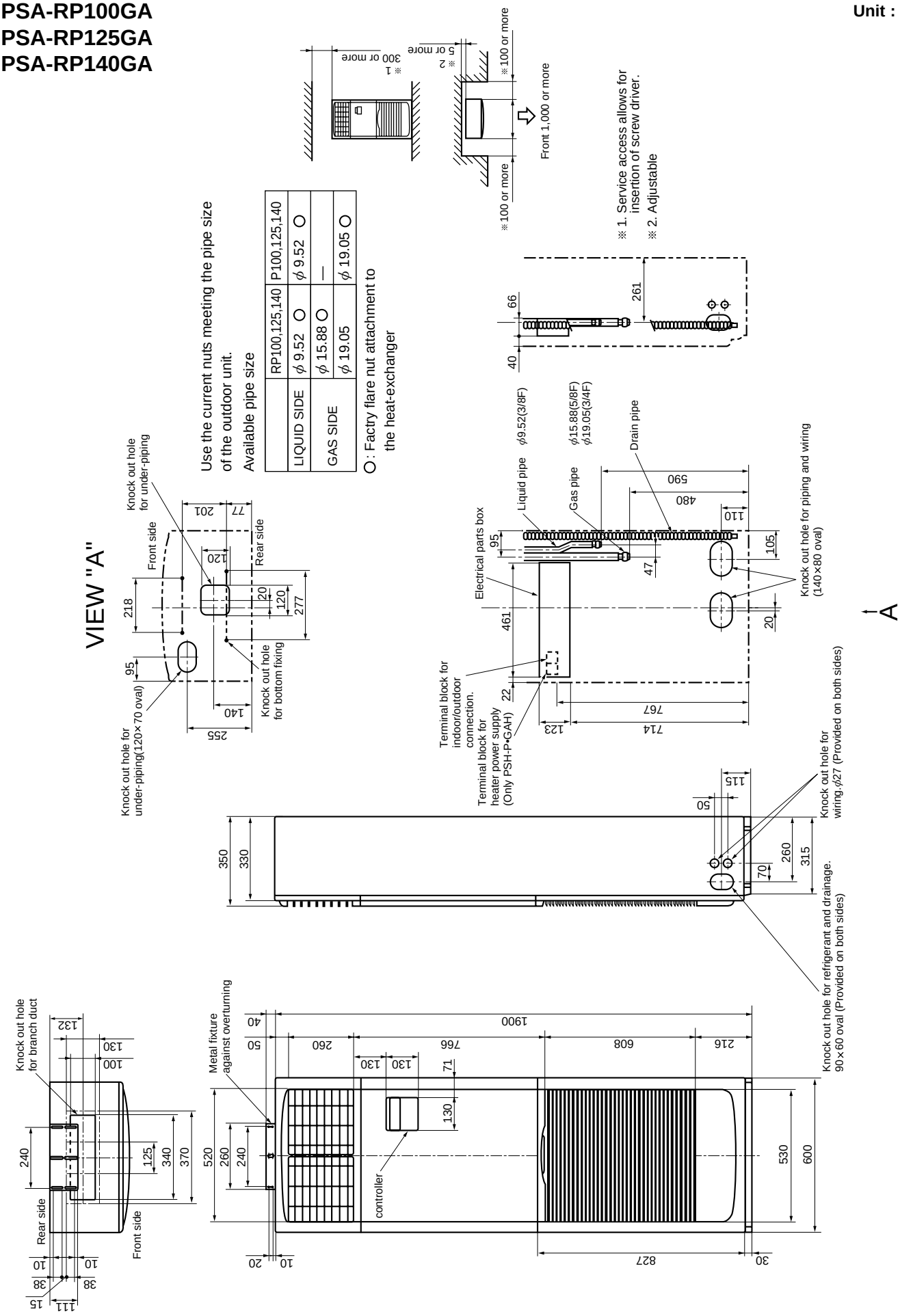

OUTDOOR UNIT
PUHZ-RP35VHA
PUHZ-RP50VHA

Unit : mm

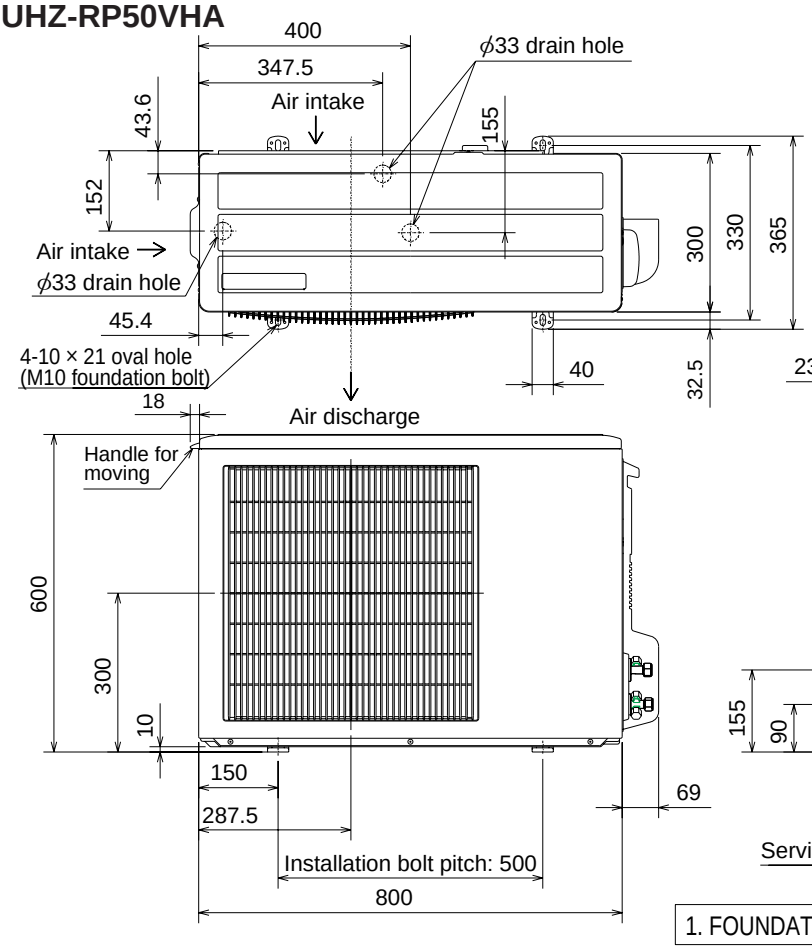

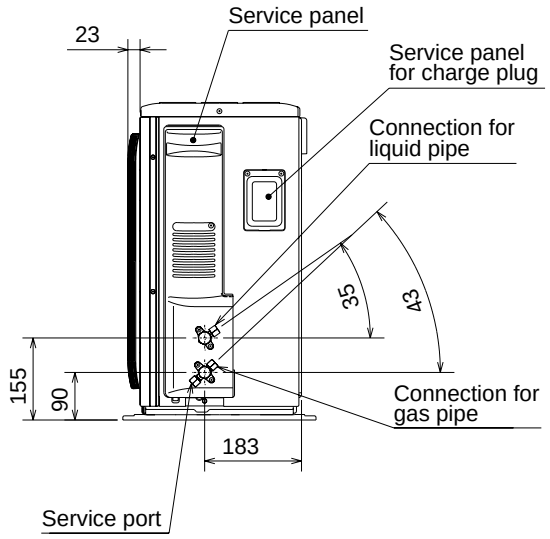

1. FOUNDATION BOLTS

Please secure the unit firmly with 4 foundation (M10) bolts. (Bolts, washer and nut must be purchased locally.)

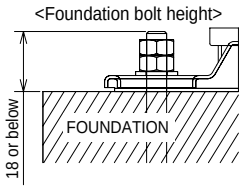

2. PIPING-WIRING DIRECTION

Piping and wiring connection can be made from the rear direction only.

3. ATTACHING THE CONDUIT

In order to attach the conduit, it is necessary to fix the metal plate with 2 screws to the back panel. Procure the metal plate and make screw holes locally. It is recommended to use the metal plate shown below. Align the metal plate to the marks on the unit and attach it.

※ The position and the size of conduit hole depend on the conduit to be used.

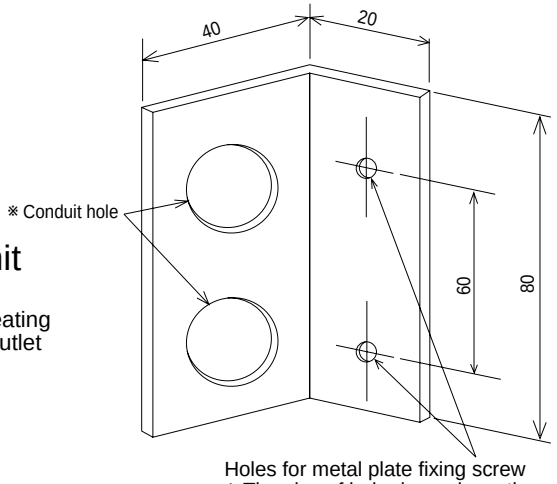

Holes for metal plate fixing screw
※ The size of hole depends on the screw to be used.

Free space around the outdoor unit (basic example)

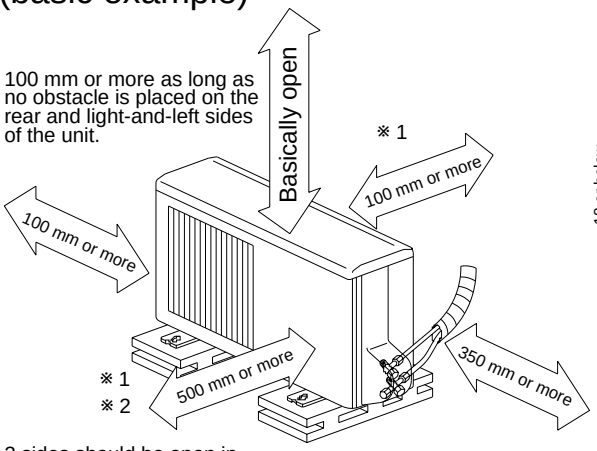

2 sides should be open in the right, left and rear side.

Minimum installation space for outdoor unit

※ 1 In the place where short cycle tends to occur, cooling and heating capacity and power consumption might get lowered 10%. Air outlet guide (optional PAC-SG58SG) will help them improve.

※ 2 If air discharges to the wall, the surface might get stained.

PUHZ-RP60VHA
PUHZ-RP71VHA

Unit : mm

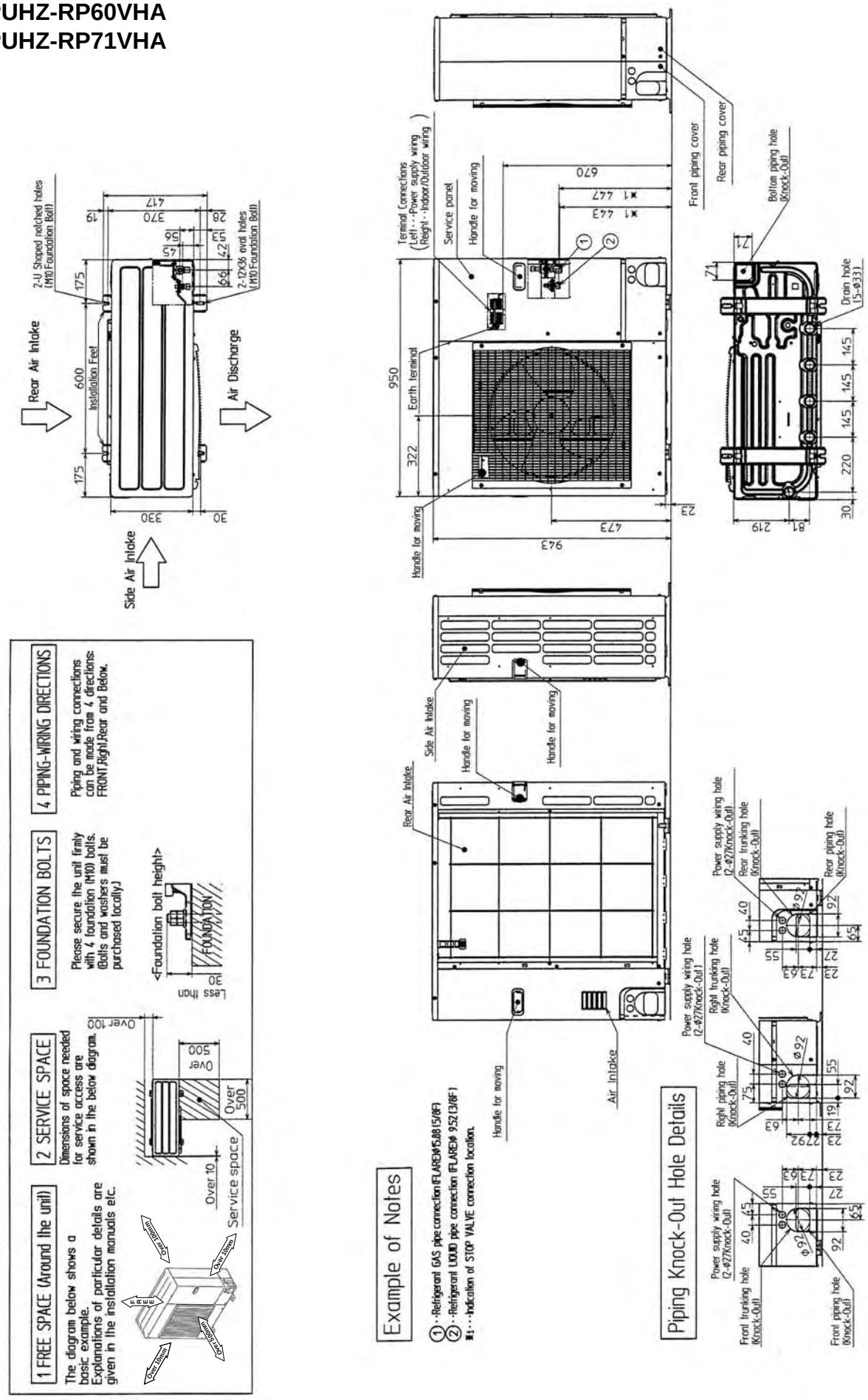

PUHZ-RP100VHA PUHZ-RP100YHA
PUHZ-RP125VHA PUHZ-RP125YHA
PUHZ-RP140VHA PUHZ-RP140YHA

Unit : mm

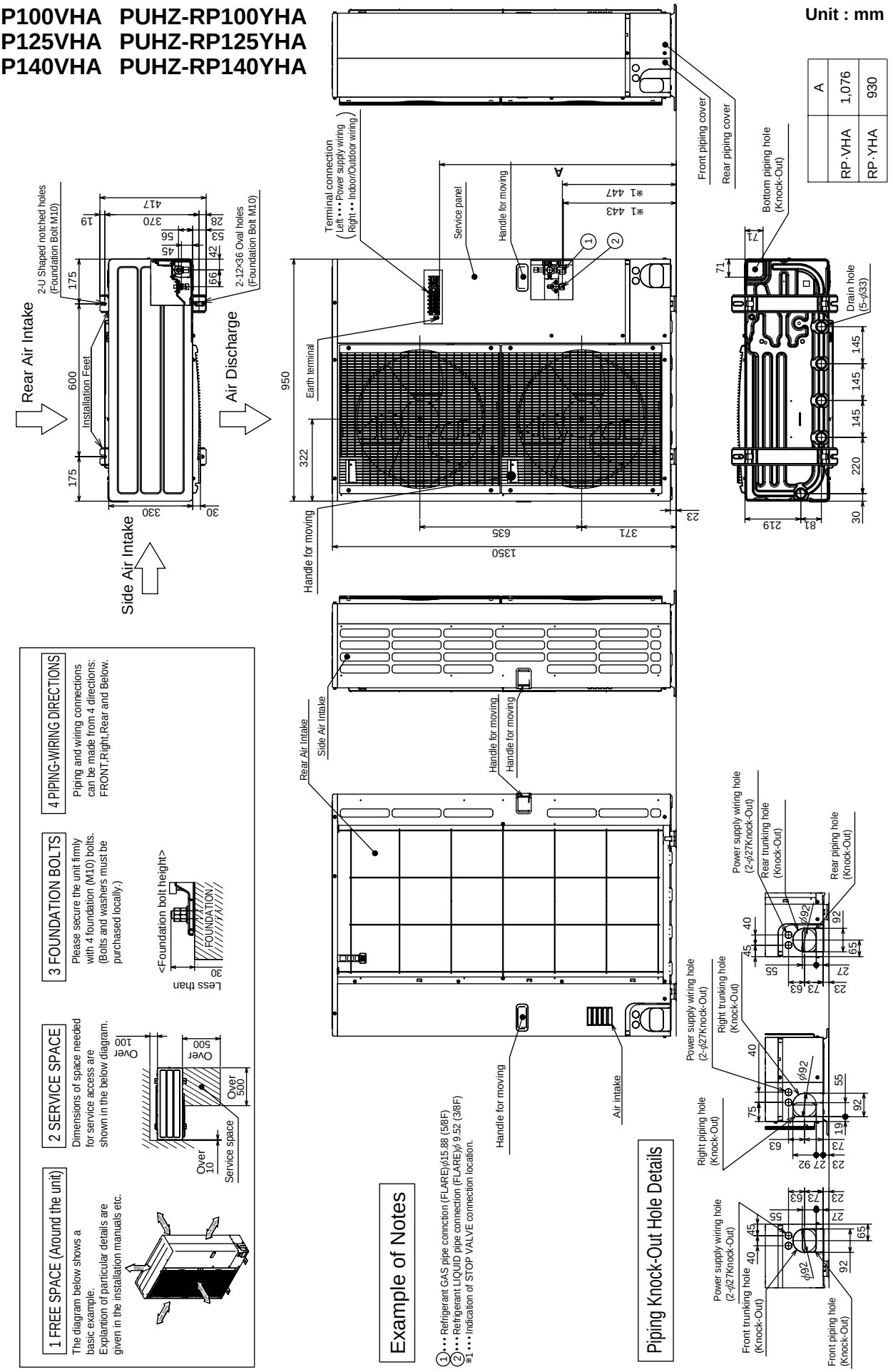

	A
RP·VHA	1,076
RP·YHA	930

PUHZ-RP200YHA
PUHZ-RP250YHA

Unit : mm

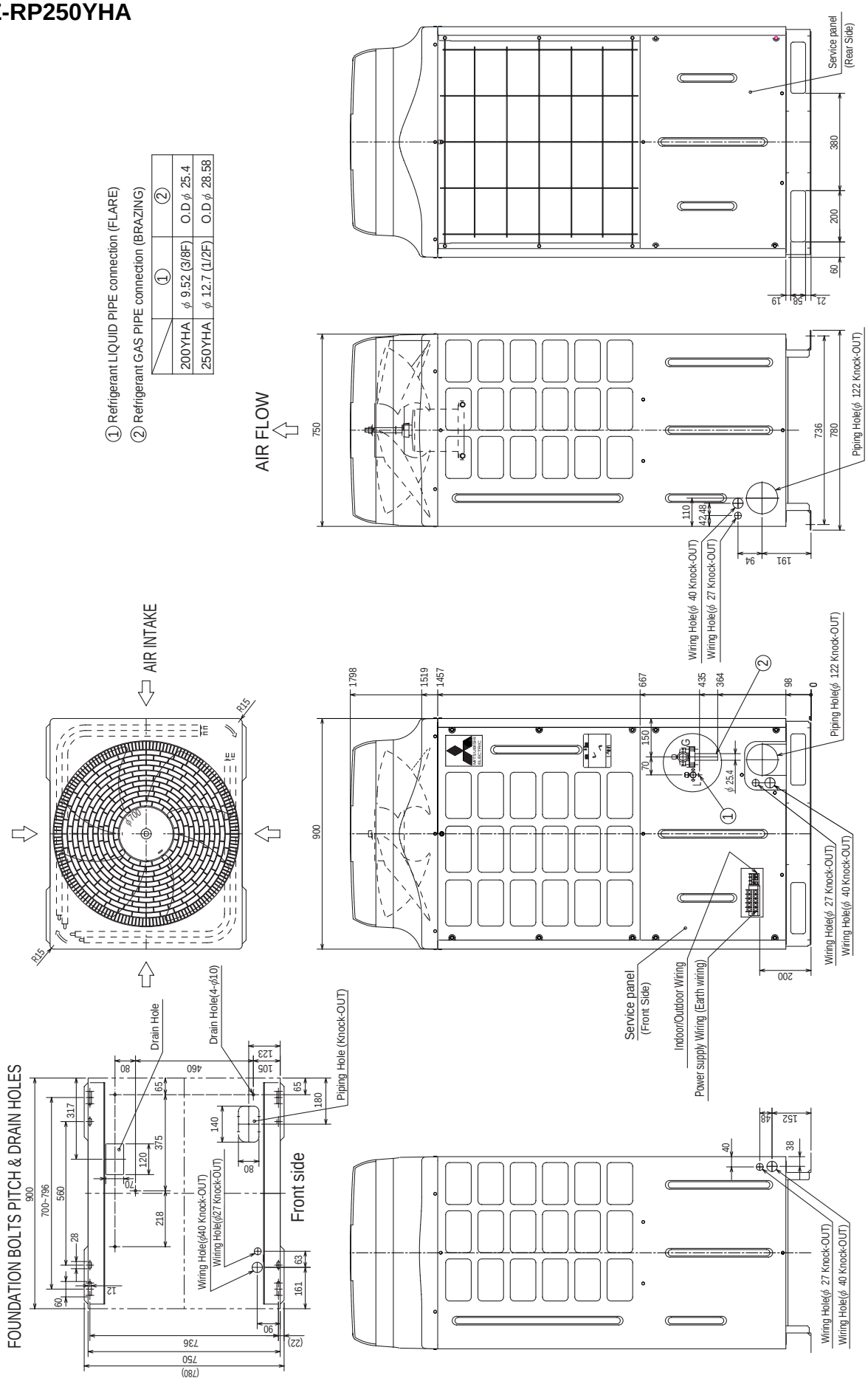

WIRED REMOTE CONTROLLER

Unit : mm

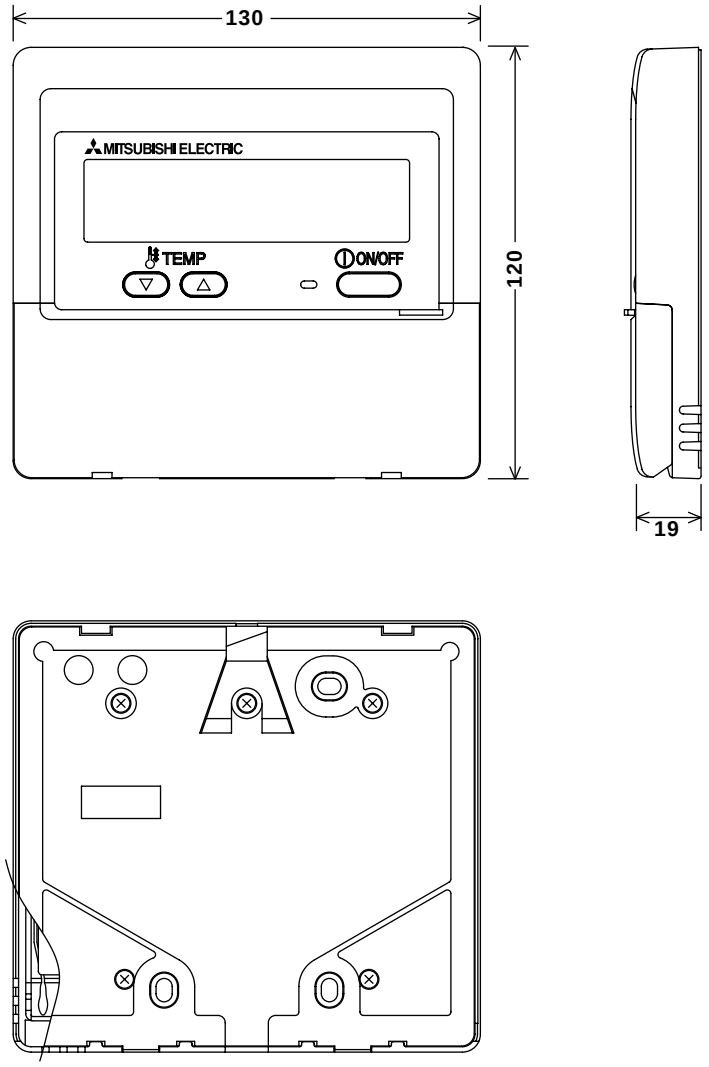

WIRELESS REMOTE CONTROLLER

Unit : mm

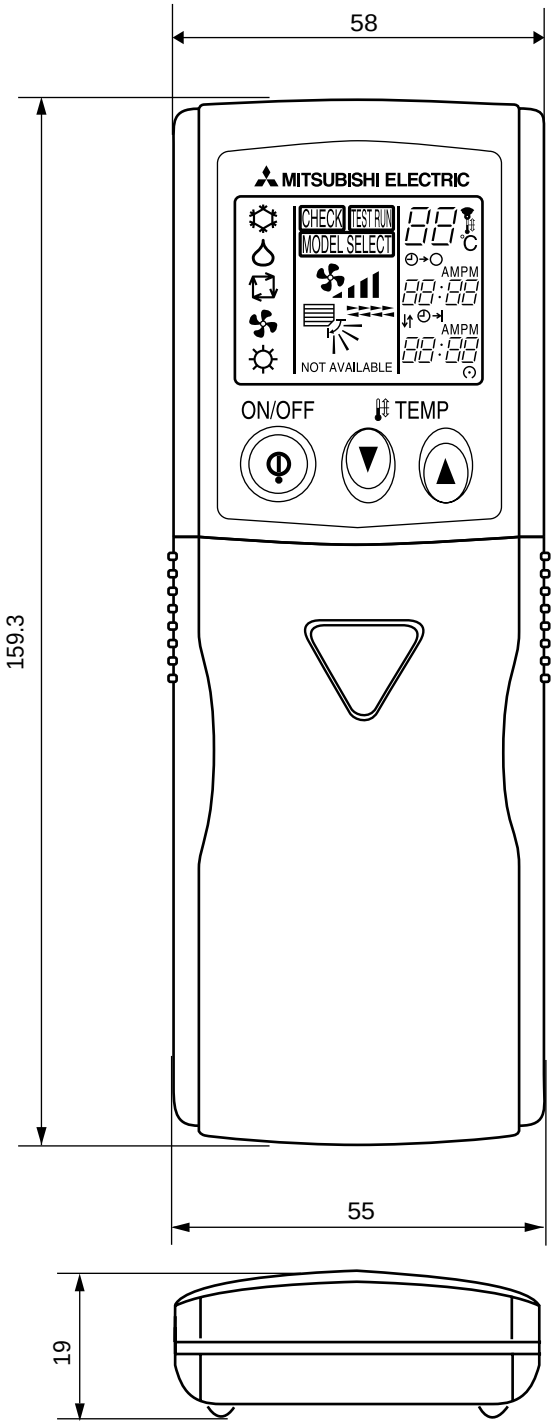

4 WIRING DIAGRAM

PLA-RP35AA PLA-RP50AA PLA-RP60AA PLA-RP71AA PLA-RP100AA PLA-RP125AA PLA-RP140AA

[LEGEND]

SYMBOL	NAME	SYMBOL	NAME	SYMBOL	NAME
P.B	INDOOR POWER BOARD	MF	FAN MOTOR	W.B	WIRELESS REMOTE CONTROLLER BOARD
I.B	INDOOR CONTROLLER BOARD	MV	VANE MOTOR	RU	RECEIVING UNIT
FUSE	FUSE(T6.3AL250V)	H2	DEW PREVENTION HEATER	BZ	BUZZER
ZNR	VARISTOR	DP	DRAIN-UP MACHINE	LED1	LED(RUN INDICATOR)
BCR	FAN CONTROL ELEMENT	DS	DRAIN SENSOR	LED2	LED(HOT ADJUST)
CN2L	CONNECTOR(LOSSNAY)	TB2	TERMINAL BLOCK (INDOOR UNIT POWER(OPTION))	SW1	SWITCH(HEATING ON/OFF)
CN32	CONNECTOR(REMOTE SWITCH)			SW2	SWITCH(COOLING ON/OFF)
CN41	CONNECTOR(HA TERMINAL-A)	TB4	TERMINAL BLOCK (INDOOR/ OUTDOOR CONNECTING LINE)		
CN51	CONNECTOR(CENTRALLY CONTROL)				
LED1	POWER SUPPLY(I.B)	TB5, TB6	TERMINAL BLOCK(REMOTE CONTROLLER TRANSMISSION LINE)		
LED2	POWER SUPPLY(I.B)				
LED3	TRANSMISSION(INDOOR-OUTDOOR)	TH1	ROOM TEMP.THERMISTOR (0˚C/15kΩ,25˚C/5.4kΩ DETECT)		
X1	RELAY(DRAIN PUMP)				
X4	RELAY(FAN MOTOR)	TH2	PIPE TEMP.THERMISTOR/LIQUID (0˚C/15kΩ,25˚C/5.4kΩ DETECT)		
SW1	SWITCH(MODEL SELECTION)※See table 1				
SW2	SWITCH(CAPACITY CORD)※See table 2	TH5	COND./EVA. TEMP. THERMISTOR (0˚C/15kΩ,25˚C/5.4kΩ DETECT)		
SWE	CONNECTOR(EMERGENCY OPERATION)				
C	CAPACITOR(FAN MOTOR)	R.B	WIRED REMOTE CONTROLLER BOARD		

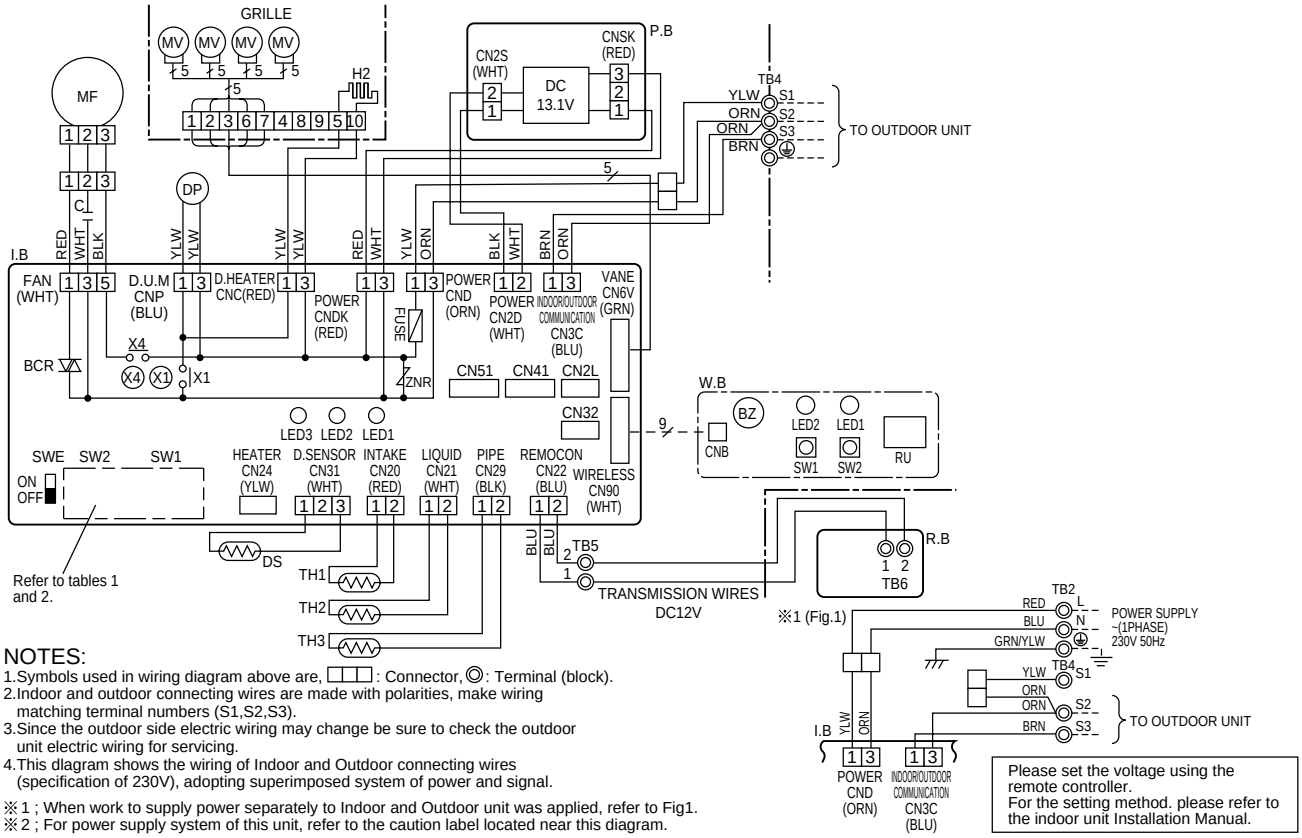

NOTES:

1.Symbols used in wiring diagram above are, ▭▭▭ : Connector, ◎ : Terminal (block).
2.Indoor and outdoor connecting wires are made with polarities, make wiring matching terminal numbers (S1,S2,S3).
3.Since the outdoor side electric wiring may change be sure to check the outdoor unit electric wiring for servicing.
4.This dlagram shows the wiring of Indoor and Outdoor connecting wires (specification of 230V), adopting superimposed system of power and signal.

※1 ; When work to supply power separately to Indoor and Outdoor unit was applied, refer to Fig1.
※2 ; For power supply system of this unit, refer to the caution label located near this diagram.

Table 1

SW1	
MODELS	Service board
PLA-RP. AA	1 2 3 4 5 ON OFF

Table 2

SW2			
MODELS	Service board	MODELS	Service board
PLA-RP35AA	1 2 3 4 5 ON OFF	PLA-RP100AA	1 2 3 4 5 ON OFF
PLA-RP50AA	1 2 3 4 5 ON OFF	PLA-RP125AA	1 2 3 4 5 ON OFF
PLA-RP60AA	1 2 3 4 5 ON OFF	PLA-RP140AA	1 2 3 4 5 ON OFF
PLA-RP71AA	1 2 3 4 5 ON OFF		

PEAD-RP35EA PEAD-RP50EA PEAD-RP60EA PEAD-RP71EA PEAD-RP100EA PEAD-RP125EA PEAD-RP140EA

SYMBOL	NAME	SYMBOL	NAME	SYMBOL	NAME
I.B.	INDOOR CONTROLLER BOARD	SW2	SWITCH(CAPACITY CORD)	TB4	TERMINAL BLOCK (INDOOR/OUTDOOR CONNECTING LINE)
FUSE	FUSE(T6.3AL250V)	SWE	SWITCH(EMERGENCY OPERATION)		
ZNR	VARISTOR	X1	RELAY(DRAIN PUMP)	TB5	TERMINAL BLOCK(REMOTE CONTROLLER)
CN2L	CONNECTOR(LOSSNAY)	X4	RELAY(FAN MOTOR)	TH1	INTAKE AIR TEMP. THERMISTOR (0℃/15KΩ,25℃/5.4KΩ DETECT)
CN24	CONNECTOR(HEATER)	X5	RELAY(FAN MOTOR)		
CN32	CONNECTOR(REMOTE SWITCH)	X6	RELAY(FAN MOTOR)	TH2	PIPE TEMP. THERMISTOR/LIQUID (0℃/15KΩ,25℃/5.4KΩ DETECT)
CN41	CONNECTOR(HA TERMINAL-A)	P.B.	INDOOR POWER BOARD		
CN51	CONNECTOR(CENTRALLY CONTROL)	DRAIN PUMP	(OPTIONAL PARTS)	TH5	COND./EVA. TEMP. THERMISTOR (0℃/15KΩ,25℃/5.4KΩ DETECT)
CN90	CONNECTOR(WIRELESS)	DP	DRAIN PUMP		
LED1	POWER SUPPLY(I.B.)	DS	DRAIN SENSOR		
LED2	POWER SUPPLY(REMOTE CONTROLLER)	C	CAPACITOR(FAN MOTOR)		
LED3	TRANSMISSION(INDOOR-OUTDOOR)	MF	FAN MOTOR		
SW1	SWITCH(MODEL SELECTION)				

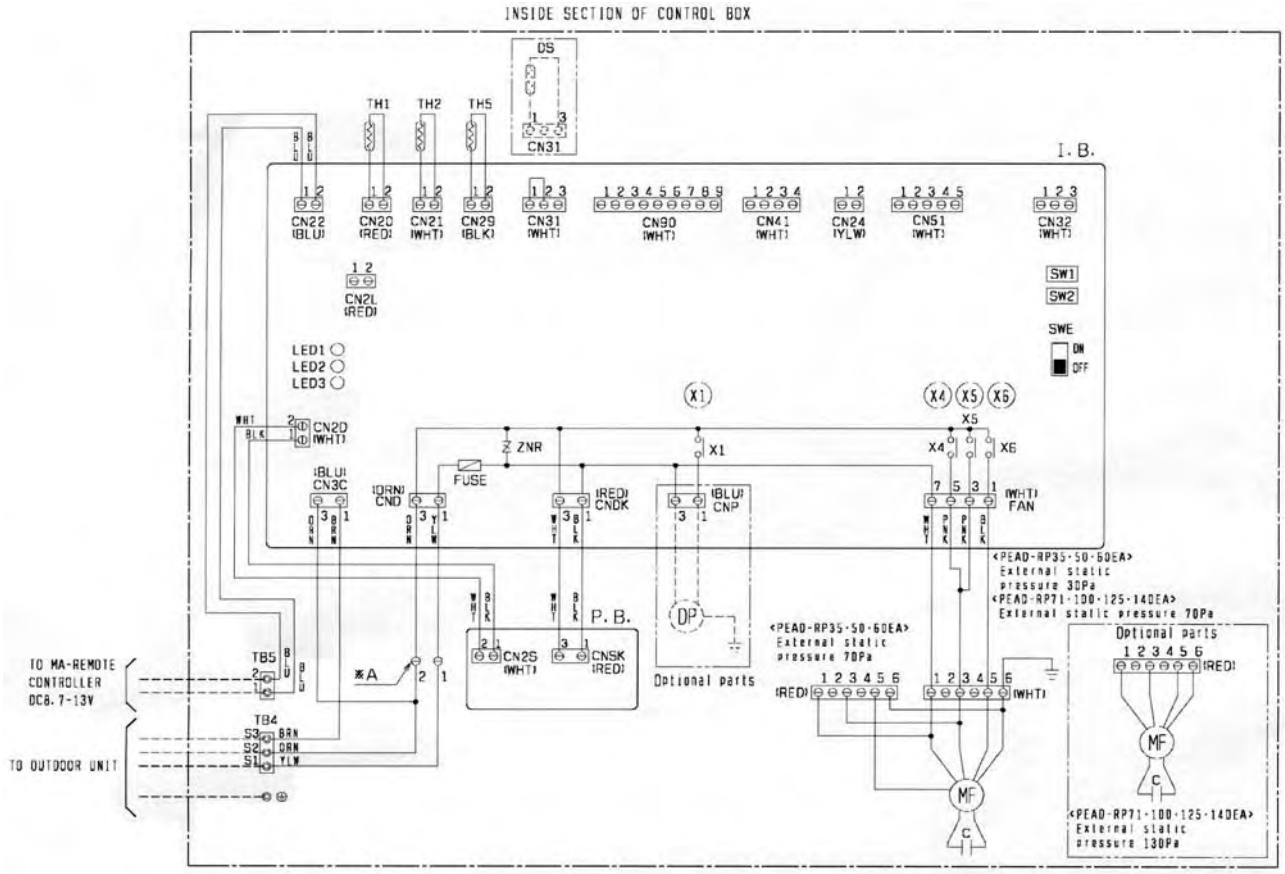

MODELS	SW1 Model selection switch	SW2 Capacity cord switch
35EA	1 2 3 4 5 ON OFF	1 2 3 4 5 ON OFF
50EA		1 2 3 4 5 ON OFF
60EA		1 2 3 4 5 ON OFF
71EA		1 2 3 4 5 ON OFF
100EA		1 2 3 4 5 ON OFF
125EA		1 2 3 4 5 ON OFF
140EA		1 2 3 4 5 ON OFF

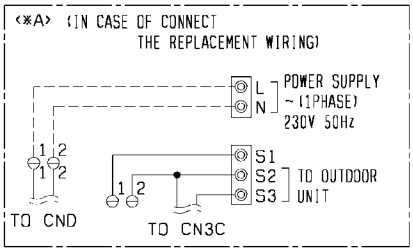

OTE 1. SINCE THE OUTDOOR SIDE ELECTRIC WIRING MAY CHANGE BE SURE TO CHECK THE OUTDOOR UNIT ELECTRIC WIRING FOR SERVICING.
2. INDOOR AND OUTDOOR CONNECTING WIRES ARE MADE WITH POLARITIES. MAKE WIRING MATCHING TERMINAL NUMBERS(S1, S2, S3).
3. SYMBOLS USED IN WIRING DIAGRAM ABOVE ARE.
:CONNECTOR, :TERMINAL.
4. THE WIRING BETWEEN MA-REMOTE CONTROLLER AND TB5 IS INCLUDED IN THE PACKAGE.

PEAD-RP60GA PEAD-RP71GA PEAD-RP100GA

SYMBOL	NAME	SYMBOL	NAME	SYMBOL	NAME
I.B.	INDOOR CONTROLLER BOARD	SW1	SWITCH(MODEL SELECTION)	TB5	TERMINAL BLOCK(REMOTE CONTROLLER)
FUSE	FUSE(T5.3AL250V)	SW2	SWITCH(CAPACITY CORD)	TH1	INTAKE AIR TEMP.THERMISTOR (0℃/15KΩ,25℃/5.4KΩ DETECT)
ZNR	VARISTOR	SWE	SWITCH(EMERGENCY OPERATION)		
CN2L	CONNECTOR(LOSSNAY)	X1	RELAY(DRAIN PUMP)	TH2	PIPE TEMP. THERMISTOR/LIQUID (0℃/15KΩ,25℃/5.4KΩ DETECT)
CN24	CONNECTOR(HEATER)	X4	RELAY(FAN MOTOR)		
CN32	CONNECTOR(REMOTE SWITCH)	X5	RELAY(FAN MOTOR)	TH5	COND./EVA. TEMP. THERMISTOR (0℃/15KΩ,25℃/5.4KΩ DETECT)
CN41	CONNECTOR(HA TERMINAL-A)	X6	RELAY(FAN MOTOR)		
CN51	CONNECTOR(CENTRALLY CONTROL)	P.B.	INDOOR POWER BOARD		
CN90	CONNECTOR(WIRELESS)	C	CAPACITOR(FAN MOTOR)		
LED1	POWER SUPPLY(I.B.)	MF	FAN MOTOR		
LED2	POWER SUPPLY(REMOTE CONTROLLER)	TB4	TERMINAL BLOCK		
LED3	TRANSMISSION(INDOOR·OUTDOOR)		(INDOOR/OUTDOOR CONNECTING LINE)		

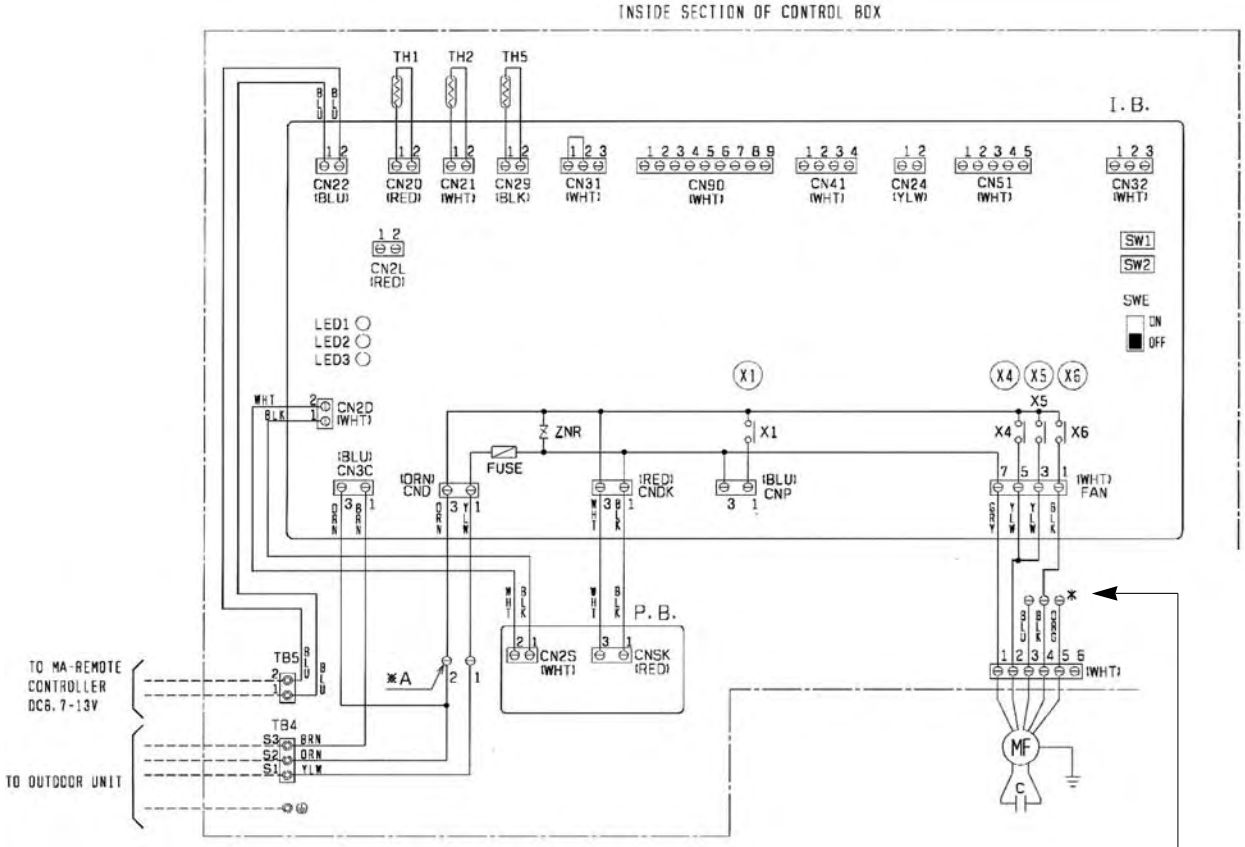

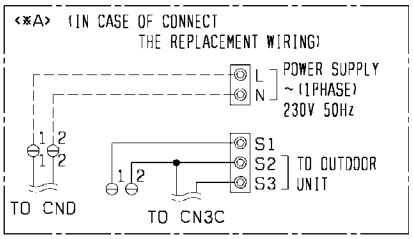

MODELS	SW1 Model selection switch	SW2 Capacity cord switch
60GA	1 2 3 4 5 ON OFF	1 2 3 4 5 ON OFF
71GA		1 2 3 4 5 ON OFF
100GA		1 2 3 4 5 ON OFF

※External static pressure

CONNECTOR COLOR	220V	230V	240V
BLU	5Pa	10Pa	20Pa
WHT (FACTORY SHIPMENT)	35Pa	50Pa	60Pa
RED	50Pa	70Pa	75Pa

NOTE 1. SINCE THE OUTDOOR SIDE ELECTRIC WIRING MAY CHANGE BE SURE TO CHECK THE OUTDOOR UNIT ELECTRIC WIRING FOR SERVICING.
2. INDOOR AND OUTDOOR CONNECTING WIRES ARE MADE WITH POLARITIES, MAKE WIRING MATCHING TERMINAL NUMBERS(S1, S2, S3).
3. SYMBOLS USED IN WIRING DIAGRAM ABOVE ARE,
⊖⊖⊖ :CONNECTOR, ⊗⊗⊗ :TERMINAL.
4. THE WIRING BETWEEN MA-REMOTE CONTROLLER AND TB5 IS INCLUDED IN THE PACKAGE.

PEA-RP71EA PEA-RP100EA PEA-RP125EA PEA-RP140EA

SYMBOL		NAME	SYMBOL		NAME	SYMBOL	NAME
P.B		INDOOR POWER BOARD	I.B	SW1	SWITCH(MODEL SELECTION)※See table 1	TB2	TERMINAL BLOCK(INDOOR UNIT POWER(OPTION))
I.B		INDOOR CONTROLLER BOARD		SW2	SWITCH(CAPACITY CODE)※See table 2	TB4	TERMINAL BLOCK (INDOOR/OUTDOOR CONNECTING LINE)
	FUSE	FUSE(T6.3AL250V)		SWE	SWITCH(EMERGENCY OPERATION)		
	ZNR	VARISTOR		X4	RELAY(FAN MOTOR)	TB5	TERMINAL BLOCK(REMOTE CONTROLLER TRANSMISSION LINE)
	CN2L	CONNECTOR(LOSSNAY)		X5	RELAY(FAN MOTOR)		
	CN32	CONNECTOR(REMOTE SWITCH))		X6	RELAY(FAN MOTOR)	TH1	ROOM TEMPERATURE THERMISTOR (0℃/15KΩ, 25℃/5.4KΩ DETECT)
	CN41	CONNECTOR(HA TERMINAL-A)	R.B		REMOTE CONTROLLER BOARD		
	CN51	CONNECTOR(CENTRALLY CONTROL)		TB6	TERMINAL BLOCK(REMOTE CONTROLLER TRANSMISSON LINE)	TH2	PIPE TEMPERATURE THERMISTOR/LIQUID (0℃/15KΩ, 25℃/5.4KΩ DETECT)
	LED1	POWER SUPPLY(I.B)					
	LED2	POWER SUPPLY(R.B)	C		CAPACITOR(FAN MOTOR)	TH5	COND./EVA. TEMPERATURE THERMISTOR (0℃/15KΩ, 25℃/5.4KΩ DETECT)
	LED3	TRANSMISSOION(INDOOR • OUTDOOR)	MF		FAN MOTOR		

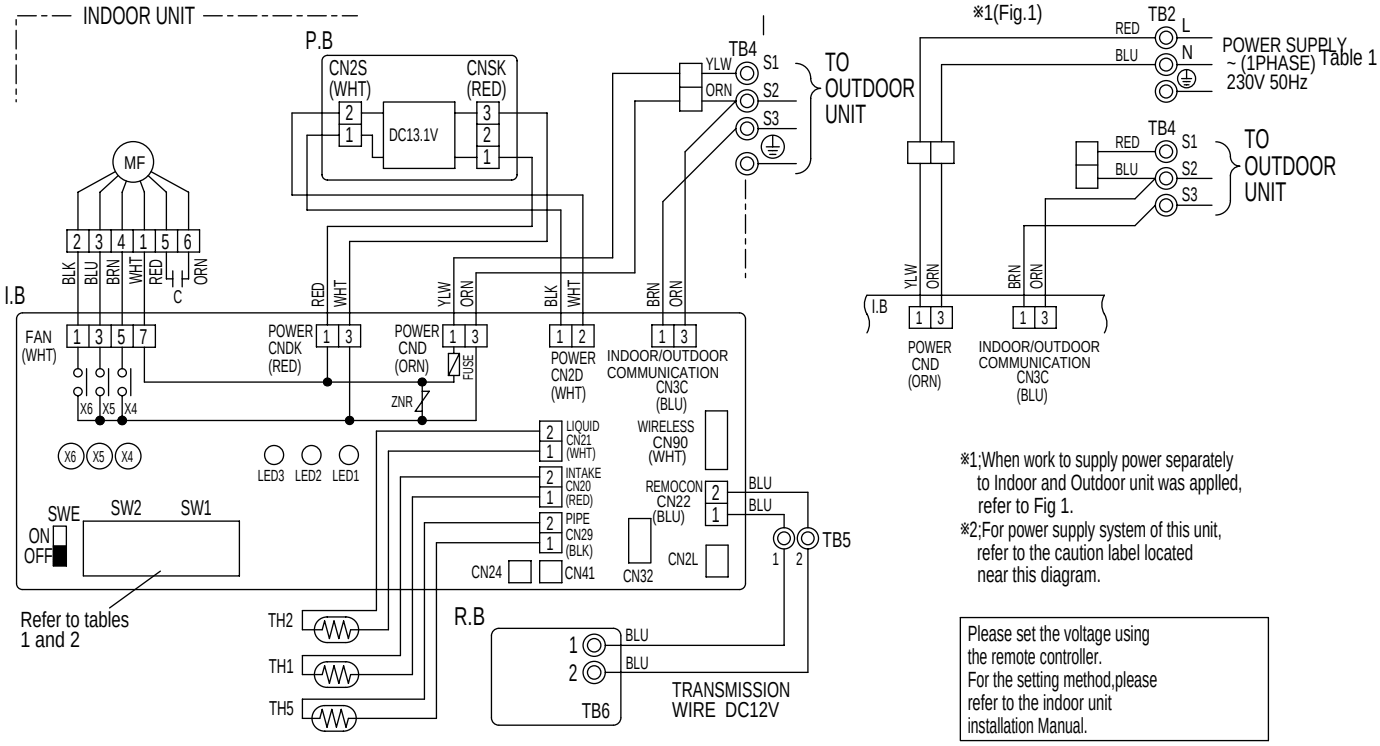

※1;When work to supply power separately to Indoor and Outdoor unit was applled, refer to Fig 1.
※2;For power supply system of this unit, refer to the caution label located near this diagram.

Please set the voltage using the remote controller. For the setting method,please refer to the indoor unit installation Manual.

Table 2

SW1	
MODELS	Manufacture/Service
PEA-RP.EA	1 2 3 4 5 ON OFF

SW2	
MODELS	Manufacture/Service
PEA-RP71EA	1 2 3 4 5 ON OFF
PEA-RP100EA	1 2 3 4 5 ON OFF
PEA-RP125EA	1 2 3 4 5 ON OFF
PEA-RP140EA	1 2 3 4 5 ON OFF

[NOTES]
1.Symbols used in wiring diagram above are, □□□:Connector, ◎ :Terminal(block).
2.Indoor and outdoor connecting wires are made with polarities, make wiring matching terminal numbers(S1,S2,S3).
3.Since the outdoor side electric wiring may change be sure to check the outdoor unit electric wiring for servicing.
4.This diagram shows the wiring of Indoor and Outdoor connecting wires(specification of 230V), adopting superimposed system of power and signal.

PEH-RP200MYA PEH-RP250MYA

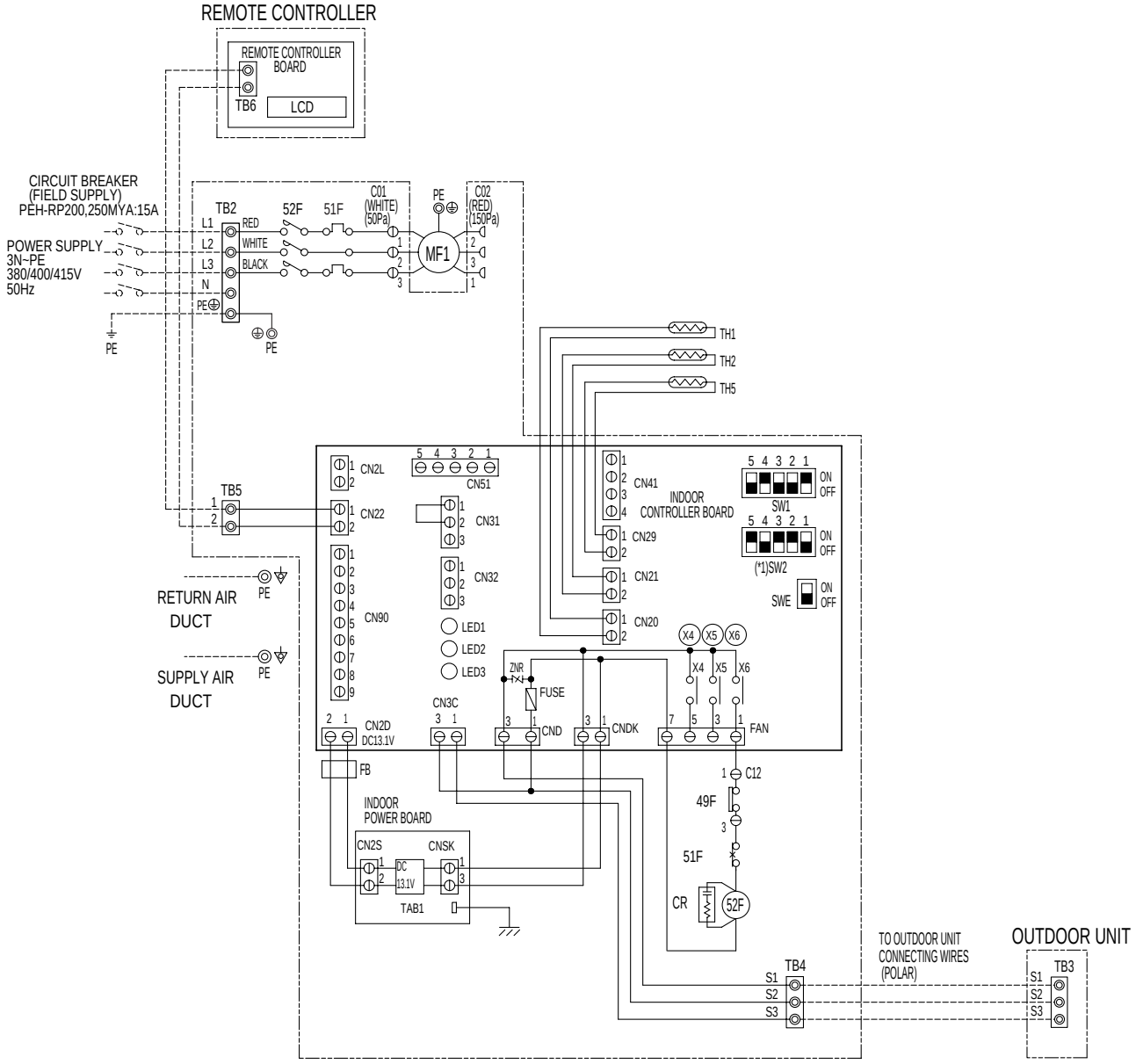

INDOOR UNIT CONTROL BOX

INDOOR UNIT

SYMBOL		NAME	
MF1		FAN MOTOR (INDOOR)	
51F		OVER CURRENT RELAY (INDOOR FAN MOTOR)	
52F		MAGNETIC CONTACTOR (INDOOR FAN MOTOR)	
49F		INTERNAL THERMOSTAT (INDOOR FAN MOTOR)	
TB2,4,5		TERMINAL BLOCK	
TH1		THERMISTOR	ROOM TEMP
TH2			LIQUID PIPE TEMP
TH5			COND/EVA TEMP
CR		SURGE KILLER	
FB		FERRITE CORE	
INDOOR CONTROLLER BOARD	FUSE	FUSE (T6.3AL250V)	
	ZNR	VARISTOR	
	X4-6	AUXILIARY RELAY	
	SW1	SWITCH(MODEL SELECTION)	
	SW2	SWITCH(CAPACITY CORD)	
	SWE	SWITCH(EMERGENCY OPERATION)	
	LED1	LED (POWER SUPPLY)	
	LED2	LED (POWER SUPPLY<REMOTE CONTROLLER>)	
	LED3	LED (TRANSMISSION<INDOOR•OUTDOOR>)	

OUTDOOR UNIT

SYMBOL	NAME
TB3	TERMINAL BLOCK

REMOTE CONTROLLER

SYMBOL	NAME
TB6	TERMINAL BLOCK

Note:1. The dotted lines show field wiring.
2. Color of earth wire is yellow and green twisting.
3. Specification subject to change without notice.
4. Indoor and outdoor connecting wires are made with polarities, make sure matching wiring and terminal.
5. Emergency operation
If a trouble occurs with either the remote controller or the indoor microcomputer and no other trouble exists, emergency operation for cooling or heating can be performed by changing the setting of switch (SWE) "ON" on the indoor controller board.
6. SW2(*1) shows PEH-RP250MYA setting.
In case of PEH-RP200MYA setting is shown as below.

(*1)SW2

7. ⊖ mark is connector.

Caution,
1. To protect fan motor from abnormal current,over current relays is installed. Therefore, do not change factory set value of over current relays.

PKA-RP35GAL PKA-RP50GAL

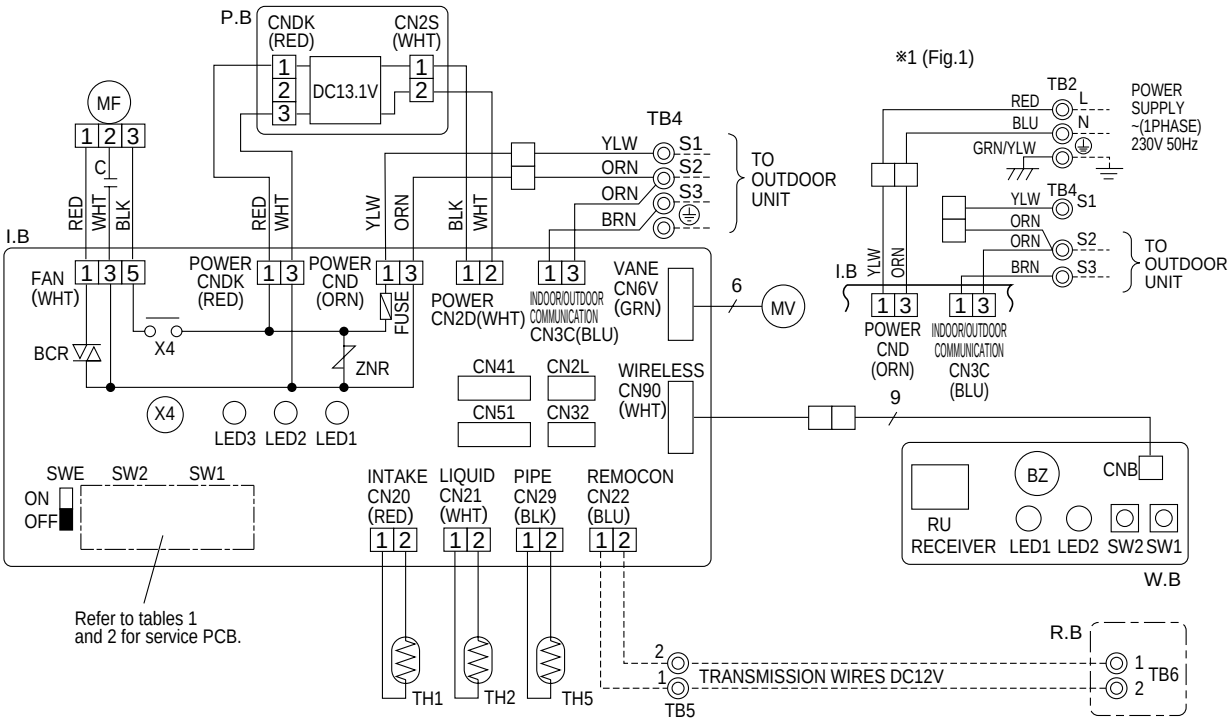

PKH-P35,50GALH models only

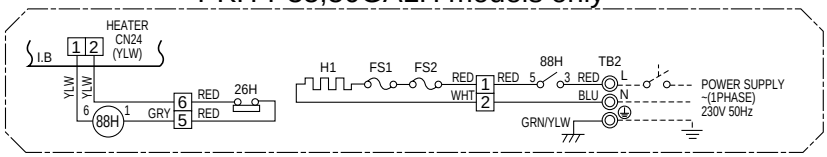

Please set the voltage using the remote controller.
For the setting method,please refer to the indoor unit Installation Manual.

SW1
Service board
1 2 3 4 5 ON OFF

SW2			
MODELS	Service board	MODELS	Service board
PKA-RP35GAL PKH-P35GALH	1 2 3 4 5 ON OFF	PKA-RP50GAL PKH-P50GALH	1 2 3 4 5 ON OFF

SYMBOL		NAME
P.B		INDOOR POWER BOARD
I.B		INDOOR CONTROLLER BOARD
	FUSE	FUSE (T6.3AL250V)
	ZNR	VARISTOR
	CN2L	CONNECTOR <LOSSNAY>
	CN32	CONNECTOR <REMOTE SWITCH>
	CN41	CONNECTOR <HA TERMINAL-A>
	CN51	CONNECTOR <CENTRALLY CONTROL>
	SW1	SWITCH <MODEL SELECTION>※See Table 1.
	SW2	SWITCH <CAPACITY CODE>※See Table 2.
	SWE	SWITCH <EMERGENCY OPERATION>
	X4	RELAY <FAN MOTOR>
	BCR	FAN CONTROL ELEMENT
	LED1	POWER SUPPLY <I.B>
	LED2	POWER SUPPLY <R.B>
	LED3	TRANSMISSION <INDOOR-OUTDOOR>

SYMBOL	NAME
C	CAPACITOR <FAN MOTOR>
MF	FAN MOTOR
MV	VANE MOTOR
TB2	TERMINAL BLOCK (HEATER) ※PKH-P.GALH models only or option for PKA-RP.GAL models.
TB4	TERMINAL BLOCK <INDOOR/ OUTDOOR CONNECTING LINE>
TB5,TB6	TERMINAL BLOCK <REMOTE CONTROLLER TRANSMISSION LINE> <OPTION>
TH1	ROOM TEMP.THERMISTOR <0℃/ 15kΩ, 25℃/ 5.4kΩ DETECT>
TH2	PIPE TEMP.THERMISTOR/ LIQUID <0℃/ 15kΩ, 25℃/ 5.4kΩ DETECT>
TH5	COND./ EVA.TEMP.THERMISTOR <0℃/ 15kΩ, 25℃/ 5.4kΩ DETECT>

SYMBOL		NAME
W.B		WIRELESS REMOTE CONTROLLER BOARD
	RU	RECEIVING UNIT
	BZ	BUZZER
	LED1	LED <RUN INDICATOR>
	LED2	LED <HOT ADJUST>
	SW1	SWITCH (HEATING ON/ OFF>
	SW2	SWITCH (COOLING ON/ OFF>
R.B		WIRED REMOTE CONTROLLER BOARD
HEATER		
	FS1	THERMAL FUSE <104℃10A>
	FS2	THERMAL FUSE <84℃10A>
	H1	HEATER
	26H	HEATER THERMAL SWITCH
	88H	HEATER CONTACTOR

NOTES:
1. Since the outdoor side electric wiring may change be sure to check the outdoor unit electric wiring for servicing.
2. Indoor and outdoor connecting wires are made with polarities, make wiring matching terminal numbers (S1, S2, S3).
3. Make sure that the main power supply of the booster heater is independent.
4. Symbols used in wiring diagram above are, ▭▭▭: Connector, ◎: Terminal (block).
※1. When work to supply power separately to Indoor and Outdoor unit was applied, refer to Fig 1.
※2. For power supply system of this unit, refer to the caution label located near this diagram.

PKA-RP60FAL PKA-RP71FAL PKA-RP100FAL

SYMBOL		NAME	SYMBOL	NAME	SYMBOL		NAME
P.B		INDOOR POWER BOARD	C	CAPACITOR(FAN MOTOR)	W.B		WIRELESS REMOTE CONTROLLER BOARD
I.B		INDOOR CONTROLLER BOARD	MF	FAN MOTOR		RU	RECEIVING UNIT
	FUSE	FUSE(T6.3AL250V)	MV	VANE MOTOR		BZ	BUZZER
	ZNR	VARISTOR	TB2	TERMINAL BLOCK (HEATER) ※PKH-P.FALH models only or option for PKA-RP.FAL models.		LED1	LED(RUN INDICATOR)
	CN2L	CONNECTOR(LOSSNAY)				LED2	LED(HOT ADJUST)
	CN32	CONNECTOR(REMOTE SWITCH)	TB4	TERMINAL BLOCK(INDOOR/OUTDOOR CONNECTING LINE)		SW1	SWITCH(HEATING ON/OFF)
	CN41	CONNECTOR(HA TERMINAL-A)				SW2	SWITCH(COOLING ON/OFF)
	CN51	CONNECTOR(CENTRALLY CONTROL)	TB5	TERMINAL BLOCK(REMOTE CONTROLLER TRANSMISSION LINE)(OPTION)	R.B		WIREDREMOTE CONTROLLER BOARD(OPTION)
	SW1	SWITCH (MODEL SELECTION) ※See Table 1.				TB6	TERMINAL BLOCK(REMOTE CONTROLLER TRANSMISSION LINE)
	SW2	SWITCH (CAPACITY CODE) ※See Table 2.	TH1	ROOM TEMP.THERMISTOR (0℃/15kΩ, 25℃/5.4kΩ DETECT)	HEATER		
	SWE	SWITCH(EMERGENCY OPERATION)				FS1,2	THERMAL FUSE(117℃ 10A:60,71FALH/ 117℃ 16A:100FALH)
	X4	RELAY(FAN MOTOR)	TH2	PIPE TEMP.THERMISTOR/LIQUID (0℃/15kΩ, 25℃/5.4kΩ DETECT)		H1	HEATER
	BCR	FAN CONTROL ELEMENT				26H	HEATER THERMAL SWITCH
	LED1	POWER SUPPLY(I.B)	TH5	COND./EVA.TEMP.THERMISTOR (0℃/15kΩ, 25℃/5.4kΩ DETECT)		88H	HEATER CONTACTOR
	LED2	POWER SUPPLY(R.B)					
	LED3	TRANSMISSION(INDOOR-OUTDOOR)					

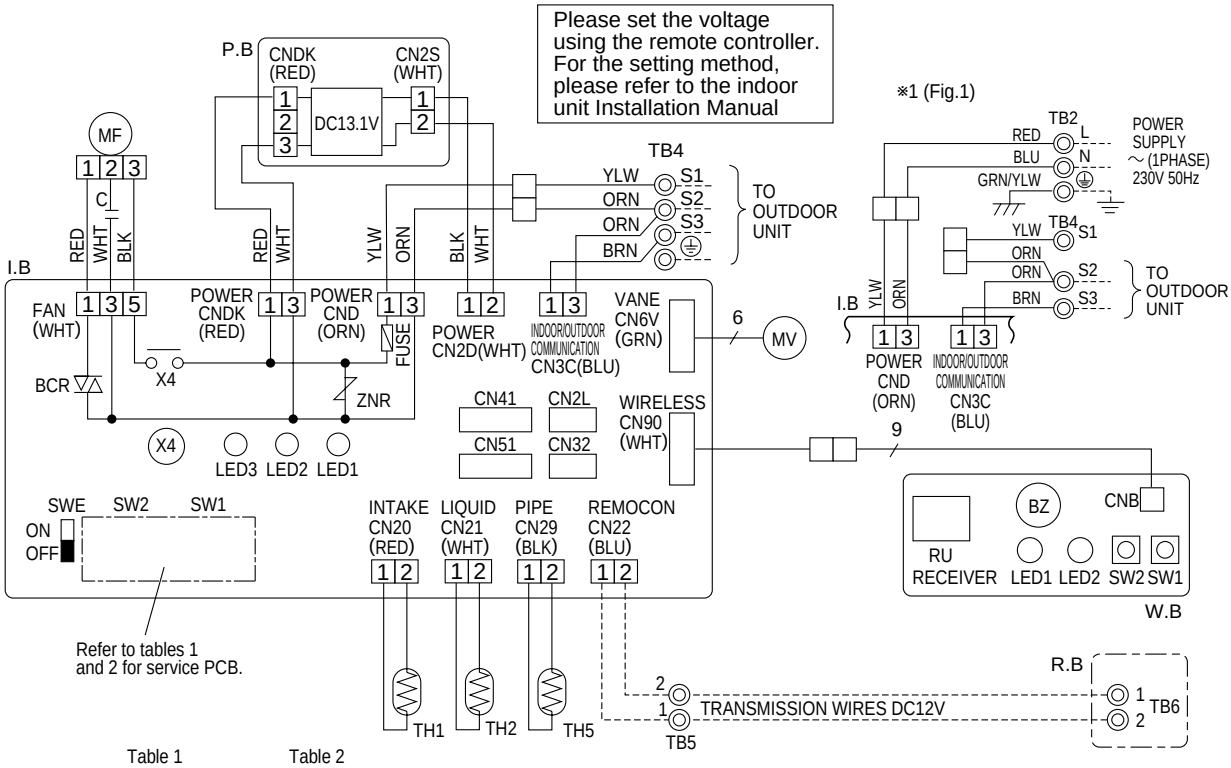

Table 1

SW1
Service board
1 2 3 4 5 ON OFF

Table 2

SW2					
MODELS	Service board	MODELS	Service board	MODELS	Service board
PKA-RP60FAL PKH-P60FALH	1 2 3 4 5 ON OFF	PKA-RP71FAL PKH-P71FALH	1 2 3 4 5 ON OFF	PKA-RP100FAL PKH-P100FALH	1 2 3 4 5 ON OFF

PKH-P60～P100FALH models only

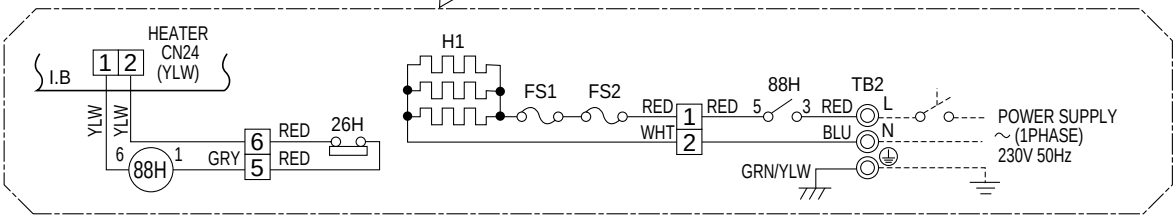

NOTES:
1. Since the outdoor side electric wiring may change be sure to check the outdoor unit electric wiring for servicing.
2. Indoor and outdoor connecting wires are made with polarities, make wiring matching terminal numbers (S1, S2, S3).
3. Make sure that the main power supply of the booster heater is independent.
4. Symbols used in wiring diagram above are, ▭▭▭: Connector, ◎: Terminal (block).
※1. When work to supply power separately to Indoor and Outdoor unit was applied, refer to Fig 1.
※2. For power supply system of this unit, refer to the caution label located near this diagram.

PCA-RP50GA PCA-RP60GA PCA-RP71GA
PCA-RP100GA PCA-RP125GA PCA-RP140GA

SYMBOL		NAME
P.B		INDOOR POWER BOARD
I.B		INDOOR CONTROLLER BOARD
	FUSE	FUSE (T6.3AL250V)
	ZNR	VARISTOR
	CN2L	CONNECTOR(LOSSNAY)
	CN32	CONNECTOR(REMOTE SWITCH)
	CN41	CONNECTOR(HA TERMINAL-A)
	CN51	CONNECTOR(CENTRALLY CONTROL)
	SW1	SWITCH (MODEL SELECTION) ※See Table 1.
	SW2	SWITCH (CAPACITY CODE) ※See Table 2.
	SWE	SWITCH(EMERGENCY OPERATION)
	X1	RELAY(DRAIN PUMP)
	X4	RELAY(FAN MOTOR)
	BCR	FAN CONTROL ELEMENT
	LED1	POWER SUPPLY(I.B)
	LED2	POWER SUPPLY(R.B)
	LED3	TRANSMISSION(INDOOR-OUTDOOR)
C		CAPACITOR(FAN MOTOR)

SYMBOL	NAME
MF	FAN MOTOR
MV	VANE MOTOR
DP	DRAIN-UP MACHINE (OPTION)
DS	DRAIN SENSOR (OPTION)
TB2	TERMINAL BLOCK (HEATER) ※PCH-P.GAH models only or option for PCA RP.GA models.
TB4	TERMINAL BLOCK(INDOOR/OUTDOOR CONNECTING LINE)
TB5,TB6	TERMINAL BLOCK(REMOTE CONTROLLER TRANSMISSION LINE)
TH1	ROOM TEMP.THERMISTOR (0℃/15kΩ, 25℃/5.4kΩ DETECT)
TH2	PIPE TEMP.THERMISTOR/LIQUID (0℃/15kΩ, 25℃/5.4kΩ DETECT)
TH5	COND./EVA.TEMP.THERMISTOR (0℃/15kΩ, 25℃/5.4kΩ DETECT)
R.B	WIRED REMOTE CONTROLLER BOARD

SYMBOL		NAME
W.B		WIRELESS REMOTE CONTROLLER BOARD(OPTION)
	RU	RECEIVING UNIT
	BZ	BUZZER
	LED1	LED(RUN INDICATOR)
	LED2	LED(HOT ADJUST)
	SW1	SWITCH(HEATING ON/OFF)
	SW2	SWITCH(COOLING ON/OFF)
HEATER		
	FS1,2	THERMAL FUSE(98℃10A:50GAH/117℃16A:100GAH 110℃16A:60,71,125,140GAH)
	H1	HEATER
	26H	HEATER THERMAL SWITCH
	88H	HEATER CONTACTOR

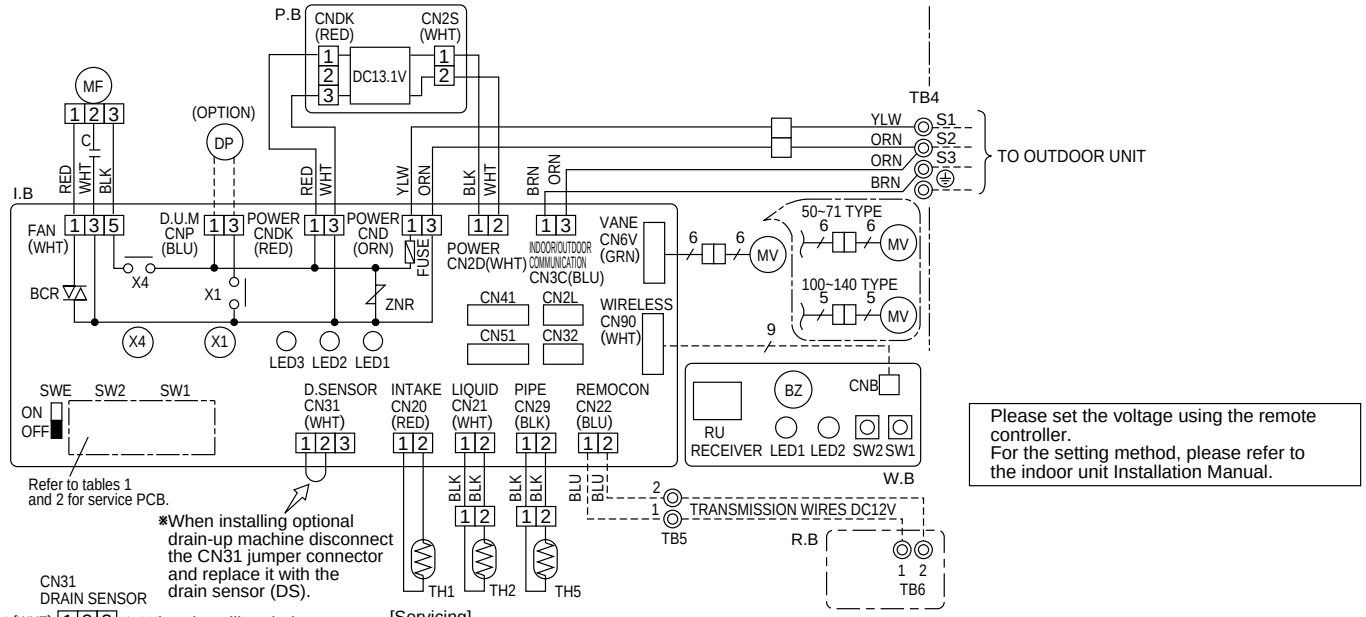

Please set the voltage using the remote controller.
For the setting method, please refer to the indoor unit Installation Manual.

[Servicing]
Fasten terminal of the terminal board "TB4"equips lock system.
To remove the fastened terminal, pull it while pressing the protruding portion (locking lever) of the terminal. The fastened terminal protruding portion should face upward.

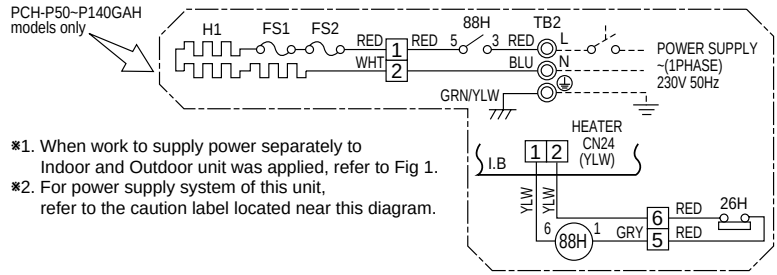

※1. When work to supply power separately to Indoor and Outdoor unit was applied, refer to Fig 1.
※2. For power supply system of this unit, refer to the caution label located near this diagram.

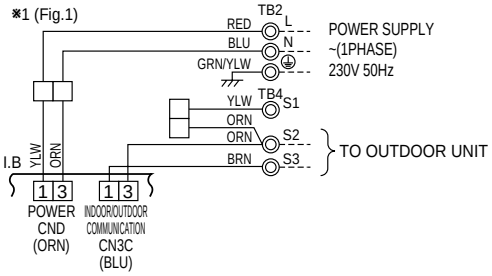

Table 1

SW1	
MODELS	Service board
PCA-RP.GA PCH-P.GAH	1 2 3 4 5 ON OFF

Table 2

SW2			
MODELS	Service board	MODELS	Service board
PCA-RP50GA PCH-P50GAH	1 2 3 4 5 ON OFF	PCA-RP100GA PCH-P100GAH	1 2 3 4 5 ON OFF
PCA-RP60GA PCH-P60GAH	1 2 3 4 5 ON OFF	PCA-RP125GA PCH-P125GAH	1 2 3 4 5 ON OFF
PCA-RP71GA PCH-P71GAH	1 2 3 4 5 ON OFF	PCA-RP140GA PCH-P140GAH	1 2 3 4 5 ON OFF

NOTES:
1. Since the outdoor side electric wiring may change be sure to check the outdoor unit electric wiring for servicing.
2. Indoor and outdoor connecting wires are made with polarities, make wiring matching terminal numbers (S1, S2, S3).
3. Make sure that the main power supply of the booster heater is independent.
4. Symbols used in wiring diagram above are,
□□□ : Connector, ◎: Terminal (block).

PCA-RP71HA PCA-RP125HA

[LEGEND]

SYMBOL		NAME	SYMBOL	NAME
P. B		INDOOR POWER BOARD	MF1, MF2	FAN MOTOR
I. B		INDOOR CONTROLLER BOARD	C1, C2	CAPACITOR(FAN MOTOR)
	FUSE	FUSE (T6.3AL250V)	H2	DEW PREVENTION HEATER
	ZNR	VARISTOR	TB2	TERMINAL BLOCK(INDOOR UNIT POWER (OPTION))
	CN2L	CONNECTOR (LOSSNAY)		
	CN32	CONNECTOR (REMOTE SWITCH)	TB4	TERMINAL BLOCK(INDOOR/OUTDOOR CONNECTING LINE)
	CN41	CONNECTOR (HA TERMINAL-A)		
	CN51	CONNECTOR (CENTRALLY CONTROLL)	TB5,TB6	TERMINAL BLOCK(REMOTE CONTROLLER TRANSMISSION LINE)
	LED1	POWER SUPPLY (I. B)		
	LED2	POWER SUPPLY (R. B)	TH1	ROOM TEMP.THERMISTOR (0˚C/15kΩ, 25˚C/5.4kΩ DETECT)
	LED3	TRANSMISSION(INDOOR-OUTDOOR)		
	X1	RELAY (DEW PREVENTION HEATER)	TH2	PIPE TEMP.THERMISTOR/LIQUID (0˚C/15kΩ, 25˚C/5.4kΩ DETECT)
	X4	RELAY(FAN MOTOR)		
	X5	RELAY(FAN MOTOR)	TH5	COND./ EVA.TEMP.THERMISTOR (0˚C/15kΩ, 25˚C/5.4kΩ DETECT)
	X6	RELAY(FAN MOTOR)		
	SW1	SWITCH (MODEL SELECTION) ※See Table 1.	R. B	WIRED REMOTE CONTROLLER BOARD
	SW2	SWITCH (CAPACITY CODE)※See Table 2.		
	SWE	SWITCH (EMERGENCY OPERATION)		

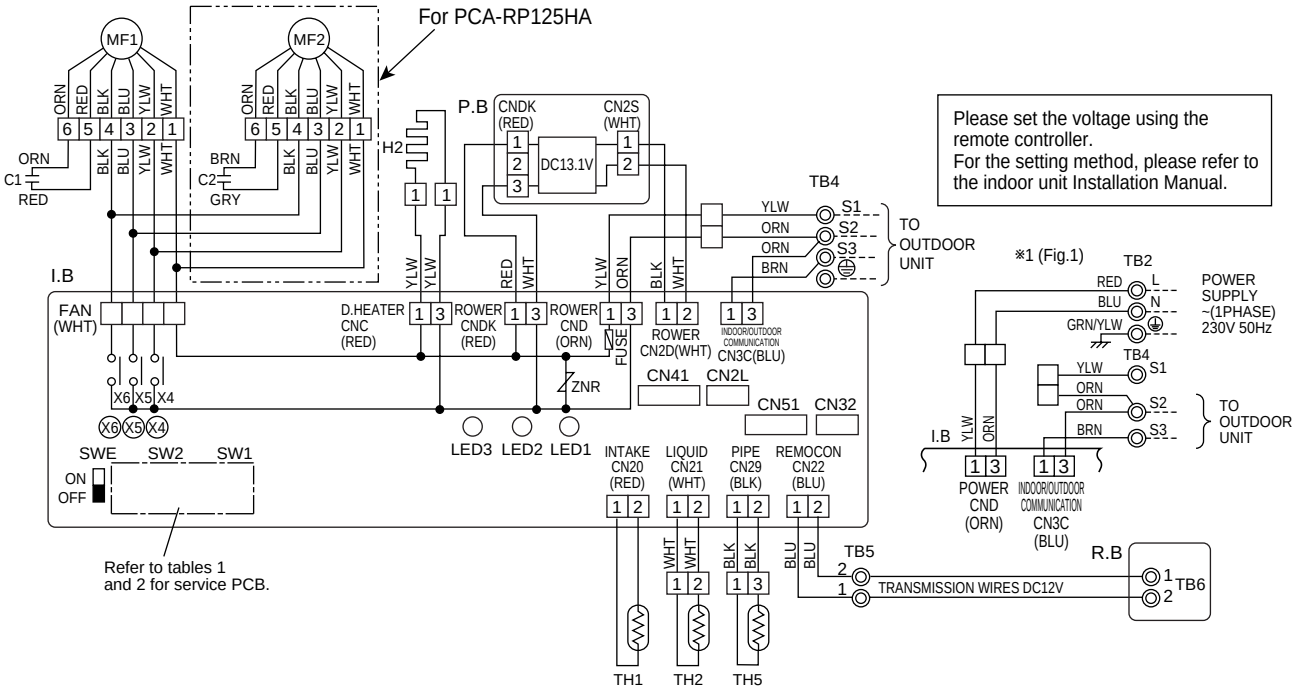

Table 1

SW1
Service board
1 2 3 4 5 ON OFF

Table 2

SW2			
MODELS	Service board	MODELS	Service board
PCA-RP71HA	1 2 3 4 5 ON OFF	PCA-RP125HA	1 2 3 4 5 ON OFF

NOTES:

1.Since the outdoor side electric wiring may change be sure to check the outdoor unit electric wiring for servicing.
2.Indoor and outdoor connecting wires are made with polarities, make wiring matching terminal numbers (S1,S2,S3).
3.Symbols used in wiring diagram above are, ▭▭▭: Connector, ◎: Terminal (block).
※1 ; When work to supply power separately to Indoor and Outdoor unit was applied, refer to Fig1.
※2 ; For power supply system of this unit, refer to the caution label located near this diagram.

PSA-RP71GA PSA-RP100GA PSA-RP125GA PSA-RP140GA

SYMBOL		NAME	SYMBOL		NAME	SYMBOL	NAME
P.B		INDOOR POWER BOARD	I.B	SW1	SWITCH (MODEL SELECTION) ※See Table 1.	C	CAPACITOR (FAN MOTOR)
I.B		INDOOR CONTROLLER BOARD		SW2	SWITCH (CAPACITY CODE) ※See Table 2.	MF	FAN MOTOR
	FUSE	FUSE (T6.3AL250V)		SWE	SWITCH (EMERGENCY OPERATION)	ML	LOUVER MOTOR
	ZNR	VARISTOR		X2	RELAY (LOUVER)	TB2	TERMINAL BLOCK (HEATER) ※PSH-P.GAH models only or option for PSA-RP.GA models.
	CN2L	CONNECTOR (LOSSNAY)		X4	RELAY (FAN MOTOR)		
	CN32	CONNECTOR (REMOTE SWITCH)		X5	RELAY (FAN MOTOR)	TB4	TERMINAL BLOCK (INDOOR/OUTDOOR CONNECTING LINE)
	CN41	CONNECTOR (HA TERMINAL-A)		X6	RELAY (FAN MOTOR)		
	CN51	CONNECTOR (CENTRALLY CONTROL)	R.B		WIRED REMOTE CONTROLLER BOARD	TH1	ROOM TEMP.THERMISTOR (0˚C/15kΩ, 25˚C/5.4kΩ DETECT)
	LED1	POWER SUPPLY (I.B)		TB6	TERMINAL BLOCK (REMOTE CONTROLLER TRANSMISSION LINE)		
	LED2	POWER SUPPLY (R.B)				TH2	PIPE TEMP.THERMISTOR/LIQUID (0˚C/15kΩ, 25˚C/5.4kΩ DETECT)
	LED3	TRANSMISSION (INDOOR-OUTDOOR)	HEATER				
				FS1,2	THERMAL FUSE (110˚C16A)	TH5	COND./EVA.TEMP.THERMISTOR (0˚C/15kΩ, 25˚C/5.4kΩ DETECT)
				H	HEATER		
				26H	HEATER THERMAL SWITCH		
				88H	HEATER CONTACTOR		

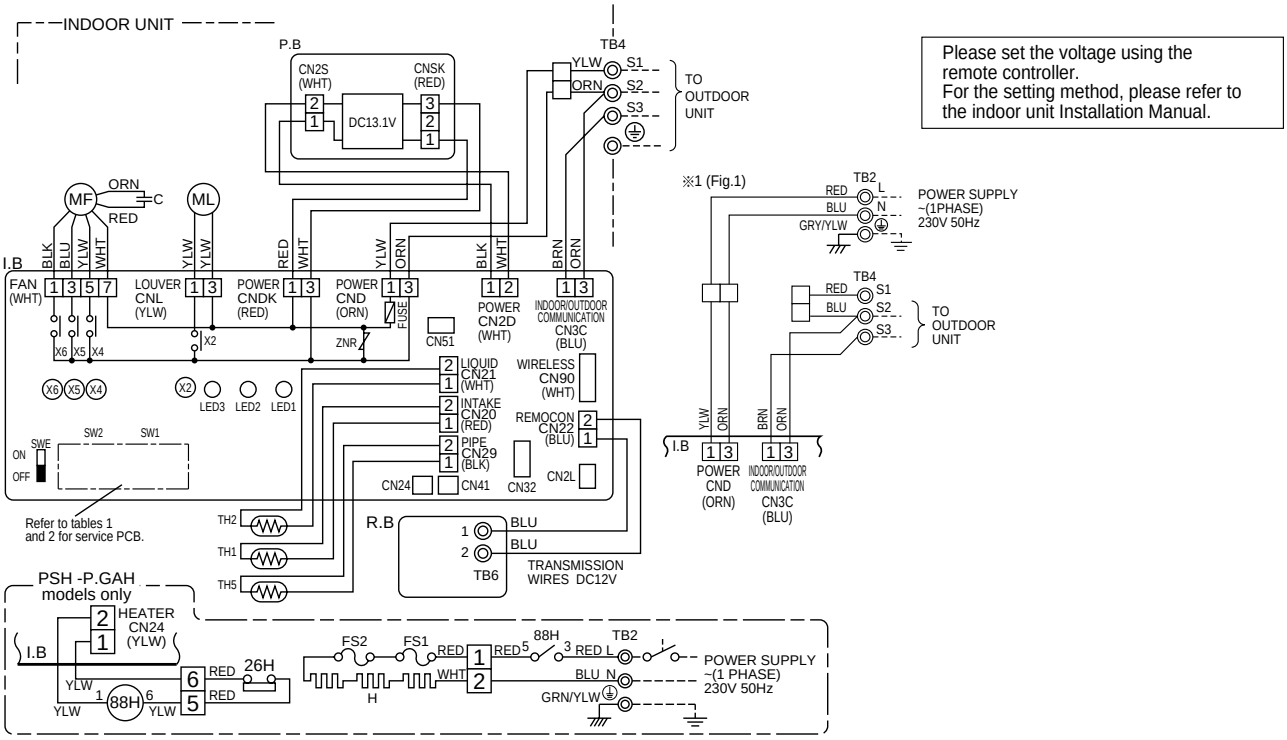

Table 1

SW2	
MODELS	Service board
PSA-RP.GA PSH-P.GAH	1 2 3 4 5 ON OFF

Table 2

SW2	
MODELS	Service board
PSA-RP71GA PSH-P71GAH	1 2 3 4 5 ON OFF
PSA-RP100GA PSH-P100GAH	1 2 3 4 5 ON OFF
PSA-RP125GA PSH-P125GAH	1 2 3 4 5 ON OFF
PSA-RP140GA PSH-P140GAH	1 2 3 4 5 ON OFF

※ 1 ; When work to supply power separately to Indoor and Outdoor unit was applied, refer to Fig1.
※ 2 ; For power supply system of this unit, refer to the caution label located near this diagram.

[NOTES]
1. Symbols used in wiring diagram above are, ☐☐☐ : Connector, ◎: Terminal (block).
2. Indoor and outdoor connecting wires are made with polarities, make wiring matching terminal numbers (S1,S2,S3).
3. Since the outdoor side electric wiring may change be sure to check the outdoor unit electric wiring for servicing.
4. This diagram shows the wiring of Indoor and Outdoor connecting wires (specification of 230V), adopting superimposed system of power and signal.

PUHZ-RP35VHA PUHZ-RP50VHA PUHZ-RP60VHA PUHZ-RP71VHA

SYMBOL	NAME
TB1	Terminal Block (Power Supply, Indoor/Outdoor)
MC	Motor for Compressor
MF1	Fan Motors
21S4	Solenoid Valve (Four-Way Valve)
63H	High Pressure Switch
SV	Solenoid Valve (Bypass Valve)
TH3	Thermistor (Outdoor Pipe)
TH4	Thermistor (Discharge)
TH6	Thermistor (Outdoor 2-Phase Pipe)
TH7	Thermistor (Outdoor)
TH8	Thermistor (Radiator Panel)
LEV(A),LEV(B)	Electronic Expansion Valve
ACL	Reactor
P.B.	Power Circuit Board
R/S	Connection Terminal (L/N-Phase)
U/V/W	Connection Terminal (U/V/W-Phase)
CN2~5	Connector
PFC	Converter
IPM	Inverter
CB1~CB3	Main Smoothing Capacitor

SYMBOL	NAME
N.F.	Noise Filter Circuit Board
LI/LO	Connection Terminal (L-Phase)
NI/NO	Connection Terminal (N-Phase)
E	Connection Terminal (Ground)
CNAC1/2	Connector
CN5	Connector
CN52C	Connector
52C	52C Relay
C.B.	Controller Circuit Board
SW1	Switch (Forced Defrost, Defect History Record Reset, Refrigerant Address)
SW4	Switch (Test Operation)
SW5	Switch (Function Switch)
SW6	Switch (Model Select)
SW7	Switch (Function Setup)
SW8	Switch
SW9	Switch
SW10	Switch (Model Select)
LED1,LED2	Light Emitting Diodes (Operation Inspection Indicators)

SYMBOL	NAME
F1~4	Fuse (6.3 A)
SWP	Switch (Pump Down)
CN31	Connector (Emergency Operation)
CNAC	Connector
CNDC	Connector
CNS	Connector
CNF1	Connector
SS	Connector (Connection for Option)
SV2	Connector
CNM	Connector (A-Control Service Inspection Kit)
CNMNT	Connector (Connected to Optional M-NET Adapter Board)
CNVMNT	Connector (Connected to Optional M-NET Adapter Board)
CNDM	Connector (Connected for Option (Contact Input))
X51,X52,X55	Reray

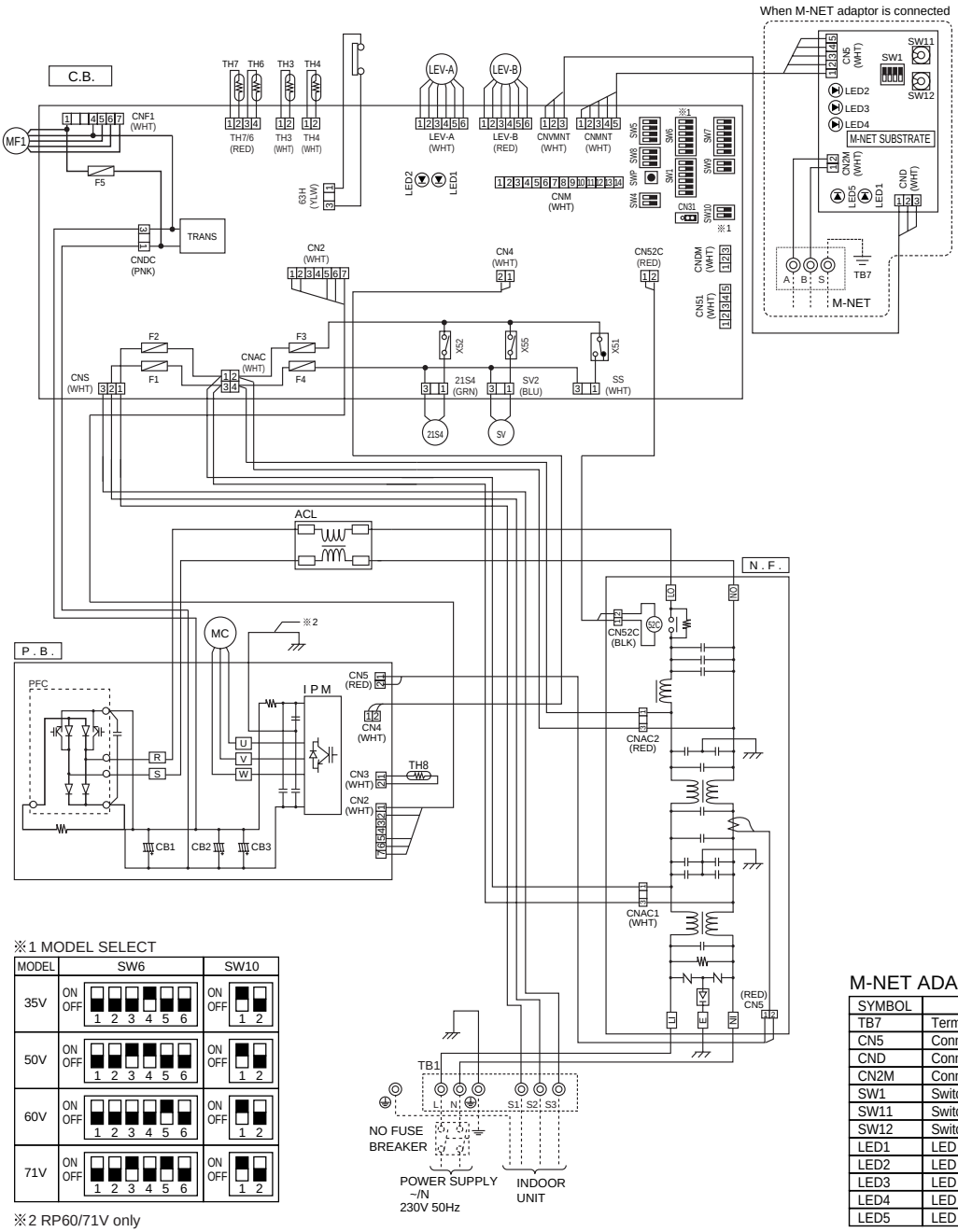

※1 MODEL SELECT

MODEL	SW6	SW10
35V	ON OFF 1 2 3 4 5 6	ON OFF 1 2
50V	ON OFF 1 2 3 4 5 6	ON OFF 1 2
60V	ON OFF 1 2 3 4 5 6	ON OFF 1 2
71V	ON OFF 1 2 3 4 5 6	ON OFF 1 2

※2 RP60/71V only

M-NET ADAPTER

SYMBOL	NAME
TB7	Terminal Block (M-net connection)
CN5	Connector (Transmission)
CND	Connector (Power Supply)
CN2M	Connector (M-NET communication)
SW1	Switch (Status of communication)
SW11	Switch (Address setting : 1st digit)
SW12	Switch (Address setting : 2nd digit)
LED1	LED (Power Supply : DC5V)
LED2	LED (Connection to Outdoor Unit)
LED3	LED (Transmission : Sending)
LED4	LED (Transmission : Recelving)
LED5	LED (Power Supply : DC12V)

PUHZ-RP100VHA PUHZ-RP125VHA PUHZ-RP140VHA

SYMBOL	NAME	SYMBOL	NAME	SYMBOL	NAME
TB1	Terminal Block (Power Supply, Indoor/Outdoor)	TABP1/P2/P	Connection Terminal (DC Voltage)	SW8	Switch
MC	Motor for Compressor	TABN1/N2/N	Connection Terminal (DC Voltage)	SW9	Switch
MF1,MF2	Fan Motors	CN2~5	Connector	SW10	Switch (Model Select)
21S4	Solenoid Valve (Four-Way Valve)	CNDC	Connector	SWP	Switch (Pump Down)
SV	Solenoid Valve (Bypass Valve)	CNAF	Connector	CN31	Connector (Emergency Operation)
63H	High Pressure Switch	DS2,3	Diode Bridge	LED1,LED2	Light Emitting Diodes (Operation Inspection Indicators)
63L	Low Pressure Switch	IPM	Power Module		
TH3	Thermistor (Outdoor Pipe)	N.F.	Noise Filter Circuit Board	CN2	Connector
TH4	Thermistor (Discharge)	LI/LO	Connection Lead (L-Phase)	CNAC	Connector
TH6	Thermistor (Outdoor 2-Phase Pipe)	NI/NO	Connection Lead (N-Phase)	CNDC	Connector
TH7	Thermistor (Outdoor)	EI	Connection Terminal (Ground)	CNS	Connector
TH8	Thermistor (Heat Sink)	CNAC1/2	Connector	CNF1	Connector
LEV-A,B	Electronic Expansion Valve	CN5	Connector	CNF2	Connector
DCL	Reactor	C.B.	Controller Circuit Board	52C	Connector
52C	52C Relay	F1~4	Fuse (6.3 A)	21S4	Connector
RS	Rush Current Protect Resistor	SW1	Switch (Forced Defrost, Defect History Record Reset, Refrigerant Address)	SS	Connector (Connection for Option)
ACTM	Active Filter Module			SV2	Connector
CB	Main Smoothing Capacitor	SW4	Switch (Test Operation)	CNM	Connector (A-Control Service Inspection Kit)
P.B.	Power Circuit Board	SW5	Switch (Function Switch)	CNMNT	Connector (Connected to Optional M-NET Adapter Board)
TABU/V/W	Connection Terminal (U/V/W-Phase)	SW6	Switch (Model Select)	CNVMNT	Connector (Connected to Optional M-NET Adapter Board)
TABS/T	Connection Terminal (L/N-Phase)	SW7	Switch (Function Setup)	CNDM	Connector (Connected for Option (Contact Input))

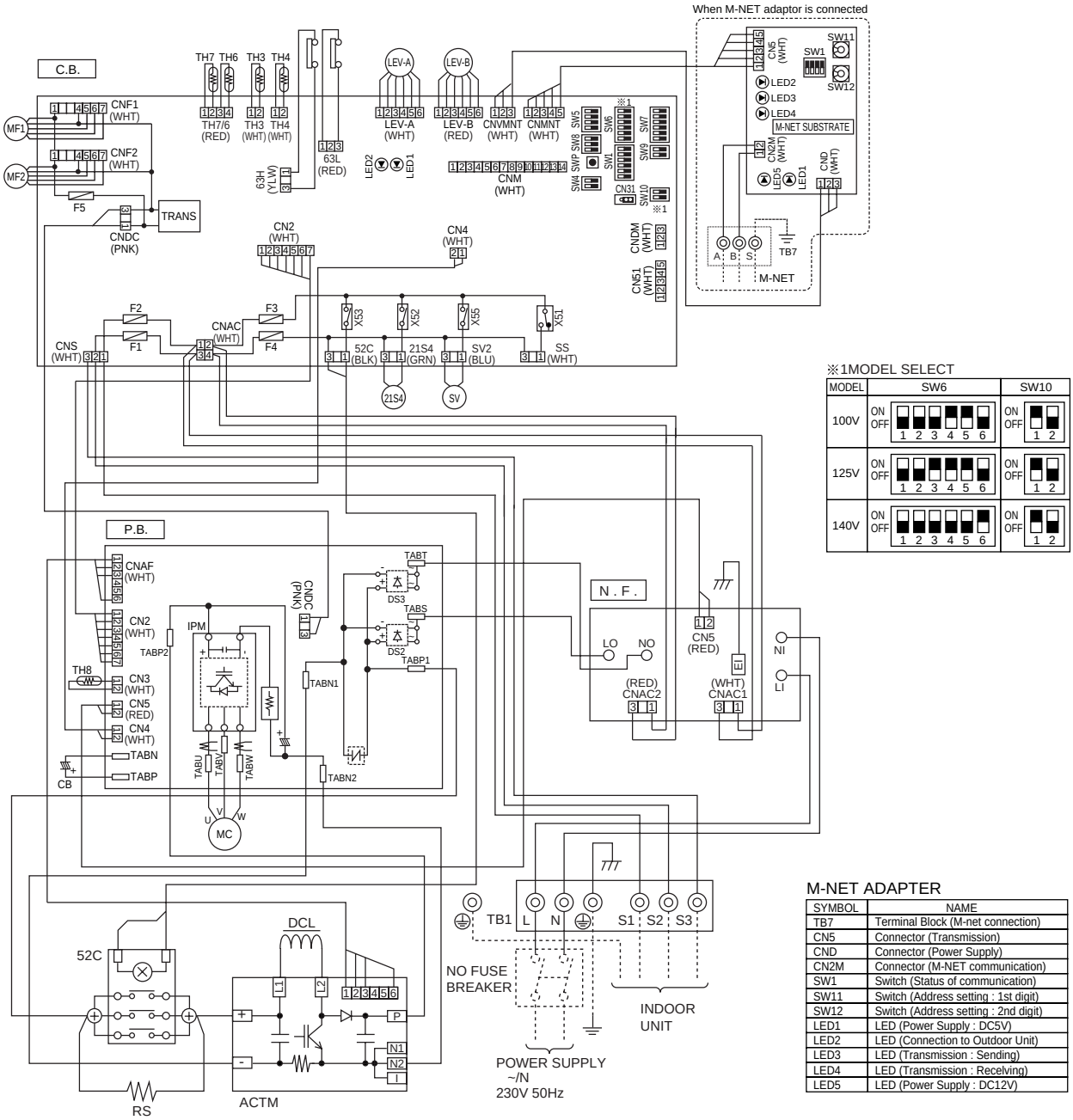

PUHZ-RP100YHA PUHZ-RP125YHA PUHZ-RP140YHA

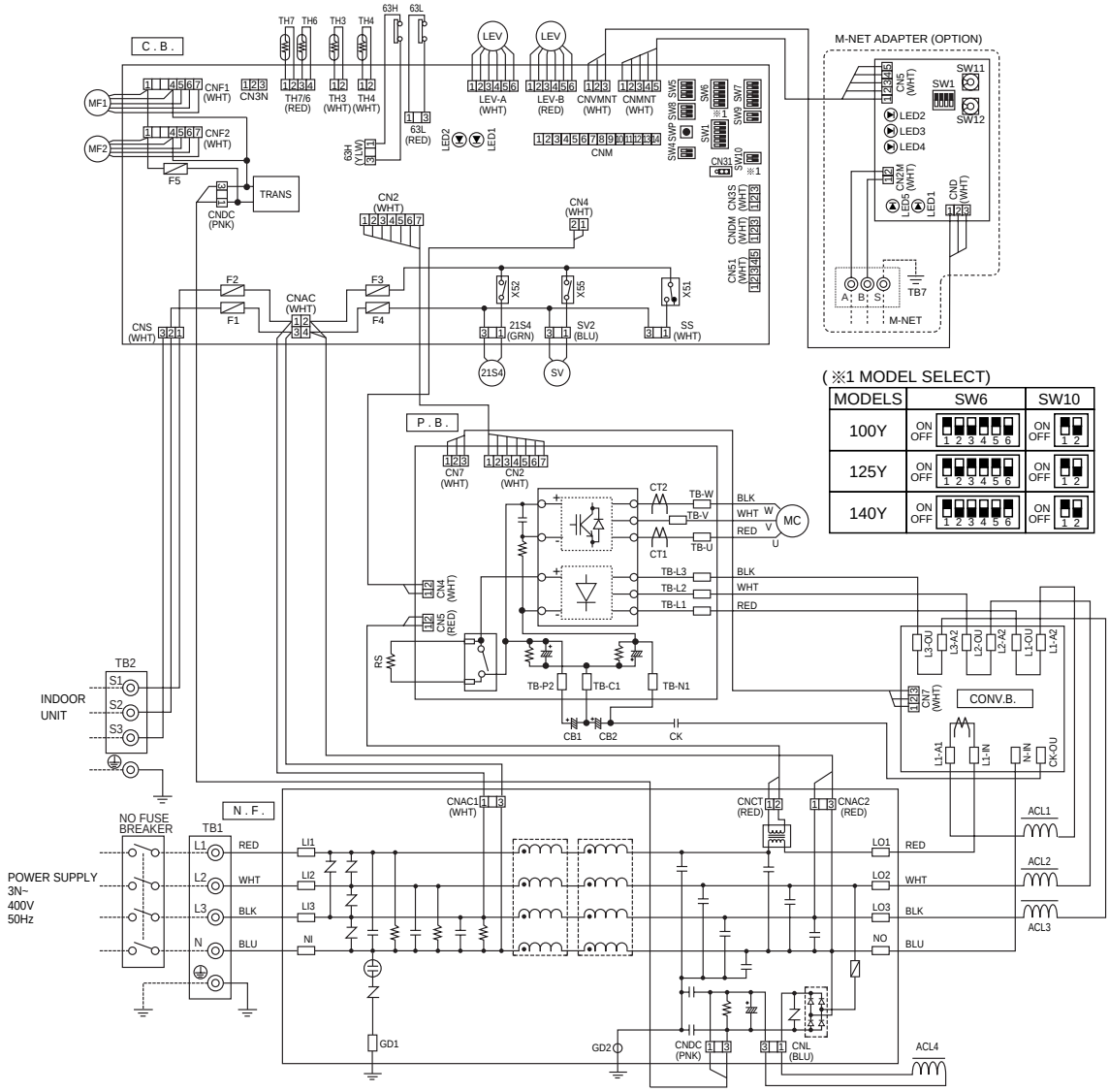

SYMBOL	NAME
TB1	Terminal Block (Power Supply)
TB2	Terminal Block (Indoor/Outdoor)
MC	Motor for Compressor
MF1,MF2	Fan Motor
21S4	Solenoid Valve (Four-Way Valve)
SV	Solenoid Valve (Bypass Valve)
63H	High Pressure Switch
63L	Low Pressure Switch
TH3	Thermistor (Outdoor Pipe)
TH4	Thermistor (Discharge)
TH6	Thermistor (Outdoor 2-Phase Pipe)
TH7	Thermistor (Outdoor)
LEV	Linear Expansion Valve
ACL1~ACL4	Reactor
CB1,CB2	Main Smoothing Capacitor
CK	Capacitor
RS	Rush Current Protect Resistor
P.B.	Power Circuit Board
TB-U/V/W	Connection Terminal (U/V/W-Phase)
TB-L1/L2/L3	Connection Terminal (L1/L2/L3-Power Supply)
TB-P2	Connection Terminal
TB-C1	Connection Terminal
TB-N1	Connection Terminal
CT1, CT2	Current Trans
CN2	Connector
CN4	Connector
CN5	Connector
CN7	Connector

SYMBOL	NAME
N.F.	Noise Filter Circuit Board
LI1/LI2/LI3/NI	Connection Terminal (L1/L2/L3/N-Power Supply)
LO1/LO2/LO3/NO	Connection Terminal (L1/L2/L3/N-Power Supply)
CNAC1	Connector
CNAC2	Connector
CNCT	Connector
CNDC	Connector
CNL	Connector
GD1	Connection Terminal (Ground)
CONV.B	Converter Circuit Board
L1-A1/IN	Connection Terminal (L1-Power Supply)
L1-A2/OU	Connection Terminal (L1-Power Supply)
L2-A2/OU	Connection Terminal (L2-Power Supply)
L3-A2/OU	Connection Terminal (L3-Power Supply)
N-IN	Connector
CK-OU	Connector
CN7	Connector
C.B.	Controller Circuit Board
F1,F2	FUSE (6.3 A)
F3,F4	FUSE (6.3 A)
SW1	Switch (Forced Defrost, Defect History Record Reset, Refrigerant Adress)
SW4	Switch (Test Operation)
SW5	Switch (Function Switch)
SW6	Switch (Model Select)
SW7	Switch (Function Switch)
SW8	Switch (Function Switch)
SW9	Switch (Function Switch)

SYMBOL	NAME
SW10	Switch (Model Select)
SWP	Switch (Pump Down)
CN31	Connector (Emergency Operation)
CNAC	Connector
CNS	Connector
CNDC	Connector
21S4	Connector (Four-Way Valve)
SV2	Connector (Bypass Valve)
SS	Connector (Connection for Option)
CN2	Connector
CN4	Connector
LEV-A/LEV-B	Connector (LEV)
63H	Connector (High Pressure Switch)
63L	Connector (Low Pressure Switch)
TH3	Connector (Thermistor)
TH4	Connector (Thermistor)
TH7/6	Connector (Thermistor)
CNF1/CNF2	Connector (Fan Motor Operation)
LED1/LED2	LED (Operatiion Inspection Indicators)
CNM	Connector (A-Control Service Inspection Kit)
CNVMNT	Connector (Connect to Optional M-NET Adapter Board)
CNMNT	Connector (Connect to Optional M-NET Adapter Board)
CN3S	Connector (Connection for Option)
CNDM	Connector (Connection for Option)
CN51	Connector (Connection for Option)

M-NET ADAPTER

TB7	Terminal Block (M-NET connection)	SW12	Switch (Address setting. 2nd digit)
CN5	Connector (Transmission)	LED1	LED (Power Supply: DC5V)
CND	Connector (Power Supply)	LED2	LED (Connection to Outdoor Unit)
CN2M	Connector (M-NET communication)	LED3	LED (Transmission: Sending)
SW1	Switch (Status of communication)	LED4	LED (Transmission: Receiving)
SW11	Switch (Address setting: 1st digit)	LED5	LED (Power Supply: DC12V)

PUHZ-RP200YHA PUHZ-RP250YHA

SYMBOL	NAME
TB1	Terminal Block (Power Supply)
TB2	Terminal Block (Indoor/Outdoor)
MC	Motor Compressor
MF	Fan Motor
21S4	Solenoid Valve (Four-Way Valve)
SV	Solenoid Valve (Bypass Valve)
63H	High Pressure Switch
63L	Low Pressure Switch
TH3	Thermistor (Outdoor Pipe)
TH32	Thermistor (Outdoor Pipe)
TH4	Thermistor (Discharge)
TH6	Thermistor (Outdoor 2-Phase Pipe)
TH7	Thermistor (Outdoor)
LEV	Linear Expansion Valve
DCL	Reactor
CB1,CB2	Main Smoothing Capacitor
RS	Rush Current Protect Resistor
FUSE1,FUSE2	FUSE (15 A)
P.B.	Power Circuit Board
TB-U/V/W	Connection Terminal (U/V/W-Phase)
TB-L1/L2/L3	Connection Terminal (LI /L2/L3-Power Supply)
TB-P1	Connection Terminal
TB-P2	Connection Terminal
TB-C1	Connection Terminal
TB-N1	Connection Terminal
CT1,CT2	Current Trans
CN1	Connector
CN2	Connector
CN4	Connector
CN5	Connector
N.F.	Noise Filter Circuit Board
LI1/LI2/L13/NI	Connection Terminal (L1/L2/L3/N-Power Supply)
LO1/LO2/LO3/NO	Connection Terminal (L1/L2/L3/N-Power Supply)
CNAC1	Connector
CNAC2	Connector
CNCT	Connector
CNDC	Connector
F.C.	Fan Controller Circuit Board
U/V/W	Connection Terminal (U/V/W-Phase)
CN2	Connector
CN5	Connector
CN6	Connector
LED1	LED (MF Operation Status Indicators)
C.B.	Controller Circuit Board
F3, F4	FUSE (6.3 A)
SW1	Switch (Forced Defrost, Defect History Record Reset, Refrigerant Address)
SW4	Switch (Test Operation)
SW5	Switch (Function Switch)
SW6	Switch (Model Select)
SW7	Switch (Function Switch)
SW8	Switch (Function Switch, Model Select)
SW9	Switch (Function Switch)
SW10	Switch (Model Select)
SWP	Switch (Pump Down)
CN31	Connector (Emergency Operation)
CNAC	Connector
CNS	Connector
CNDC	Connector
21S4	Connector
SV2	Connector
SS	Connector (Connection for Option)
CN2	Connector
CN4	Connector
CN331	Connector
CN332	Connector
LEV-A	Connector
63H	Connector
63L	Connector
TH3	Connector
TH4	Connector
TH7/6	Connector
TH32	Connector
CNM	Connector (A-Control Service Inspection Kit)
CNVMNT	Connector (Connect to Optional M-NET Adapter Board)
CNMNT	Connector (Connect to Optional M-NET Adapter Board)
CN3S	Connector (Connection for Option)
CNDM	Connector (Connection for Option)
CN51	Connector (Connection for Option)
LED1,LED2	LED (Operation Inspection Indicators)

※1 MODEL SELECT

MODEL	SW6	SW8	SW10
RP200Y	ON OFF 1 2 3 4 5 6	ON OFF 1 2 3	ON OFF 1 2
RP250Y	ON OFF 1 2 3 4 5 6	ON OFF 1 2 3	ON OFF 1 2

M-NET ADAPTER

SYMBOL	NAME
TB7	Terminal Block(M-NET connection)
CN5	Connector (Transmission)
CND	Connector (Power Supply)
CN2M	Connector (M-NET communication)
SW1	Switch (Status of communication)
SW11	Switch (Address setting:1st digit)
SW12	Switch (Address setting:2nd digit)
LED1	LED (Power Supply:DC5V)
LED2	LED (Connection to Outdoor Unit)
LED3	LED (Transmission:Sending)
LED4	LED (Transmission:Receiving)
LED5	LED (Power Supply:DC12V)

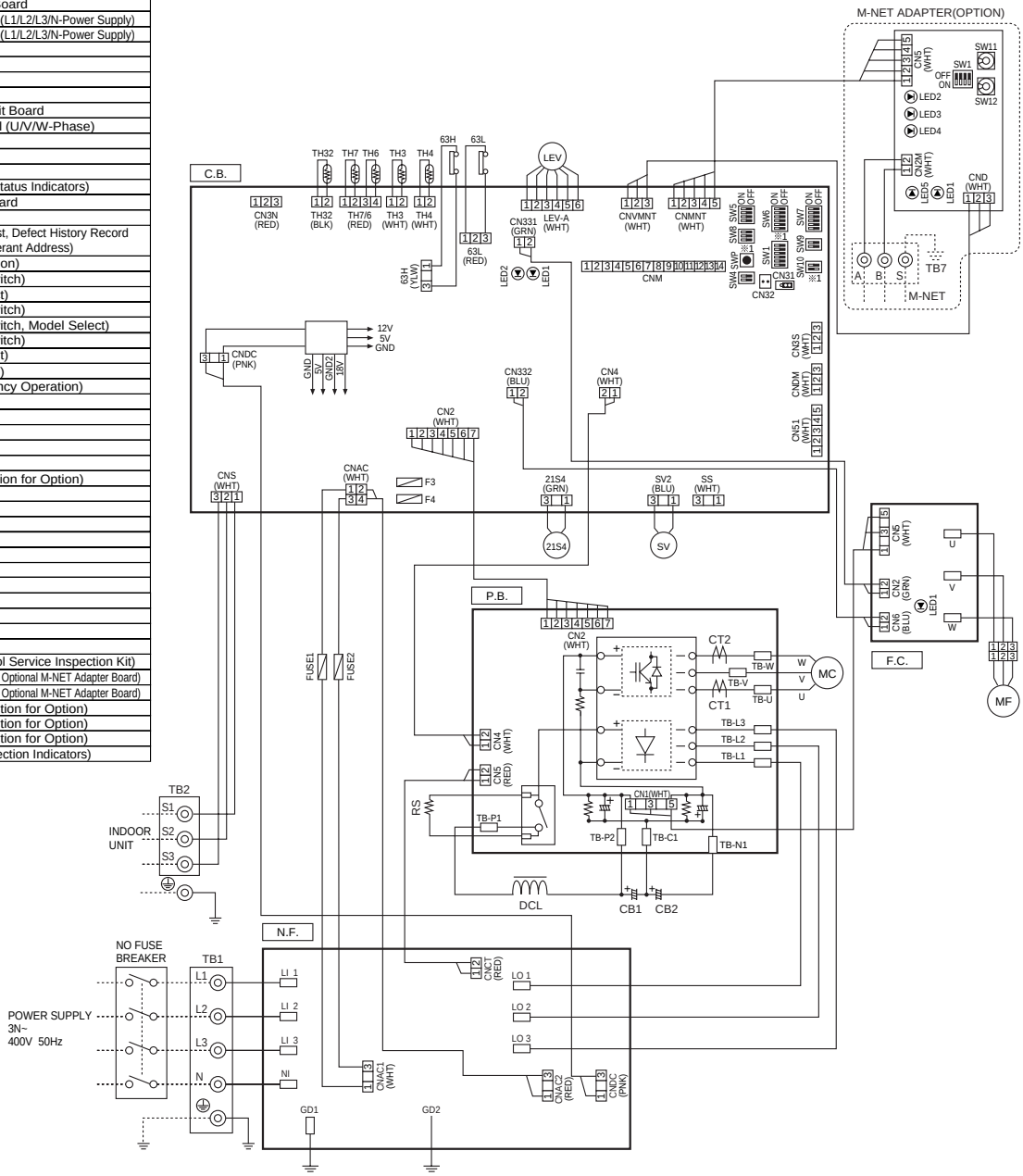

5 REFRIGERANT SYSTEM DIAGRAM

5-1. INDOOR UNIT

PLA-RP·AA **PCA-RP·GA** **PCA-RP·HA**
PKA-RP·GAL **PKA-RP·FAL** **PSA-RP·GA**
PEAD-RP·EA **PEAD-RP·GA** **PEA-RP·EA** **PEH-RP·MYA**

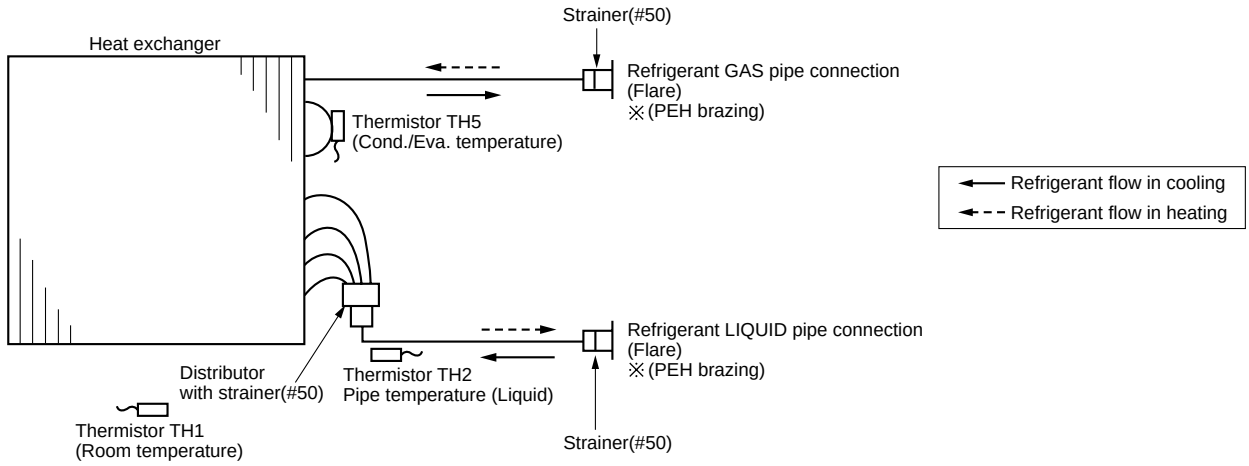

5-2. OUTDOOR UNIT

PUHZ-RP35VHA
PUHZ-RP50VHA

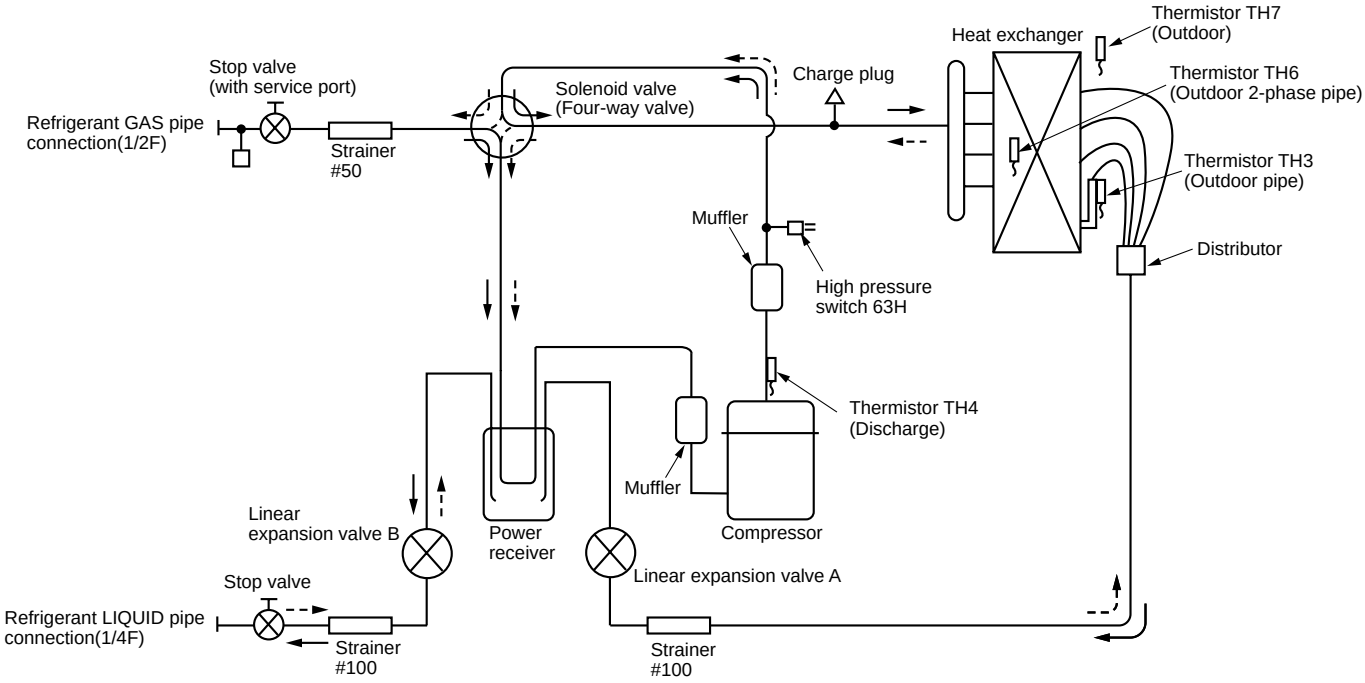

PUHZ-RP60VHA
PUHZ-RP71VHA

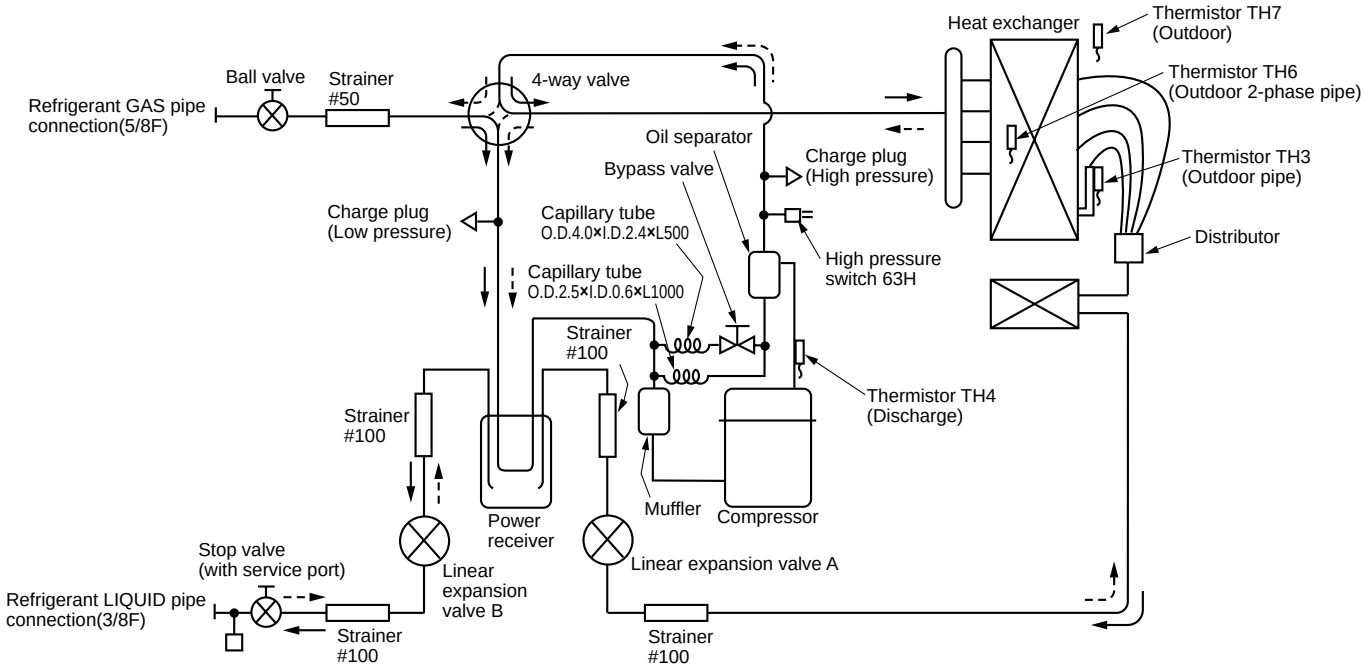

PUHZ-RP100VHA PUHZ-RP100YHA
PUHZ-RP125VHA PUHZ-RP125YHA
PUHZ-RP140VHA PUHZ-RP140YHA

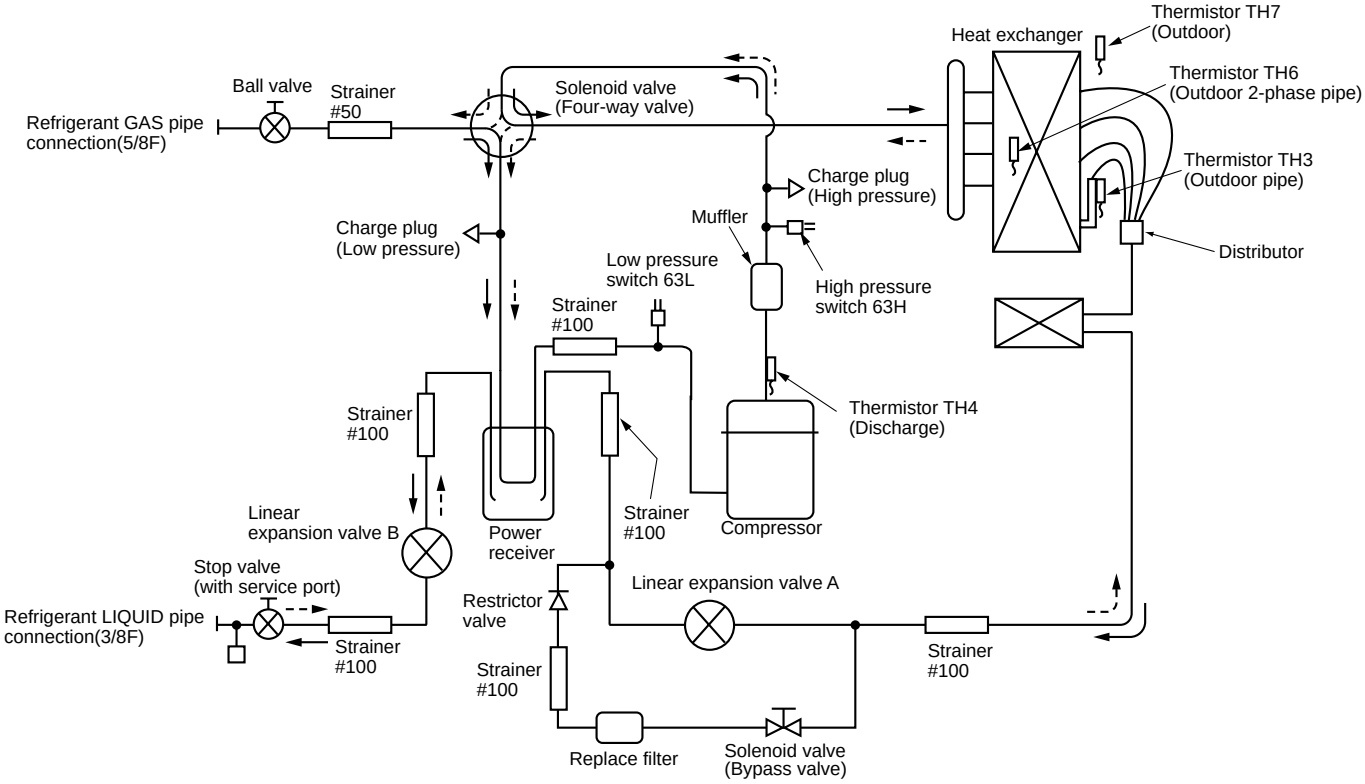

PUHZ-RP200YHA
PUHZ-RP250YHA

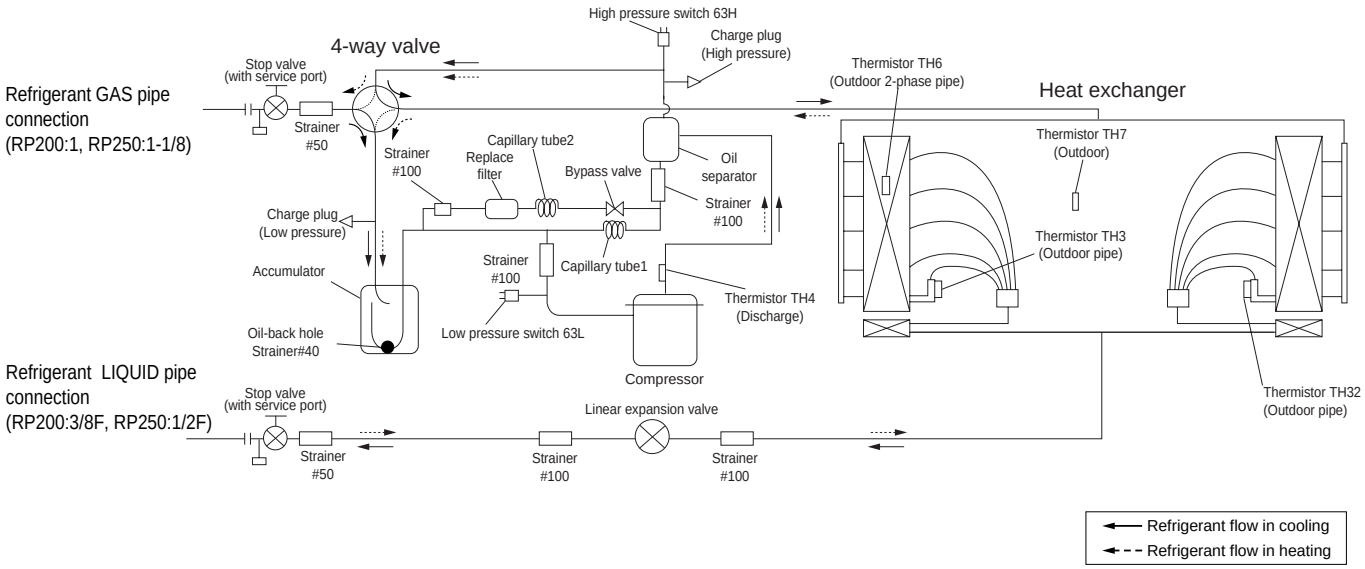

6 PERFORMANCE CURVES

6-1. FOR THE COMBINATION OF OUTDOOR UNIT PUHZ-RP•VHA, PUHZ-RP100~140YHA

Cooling performance curve(50Hz)

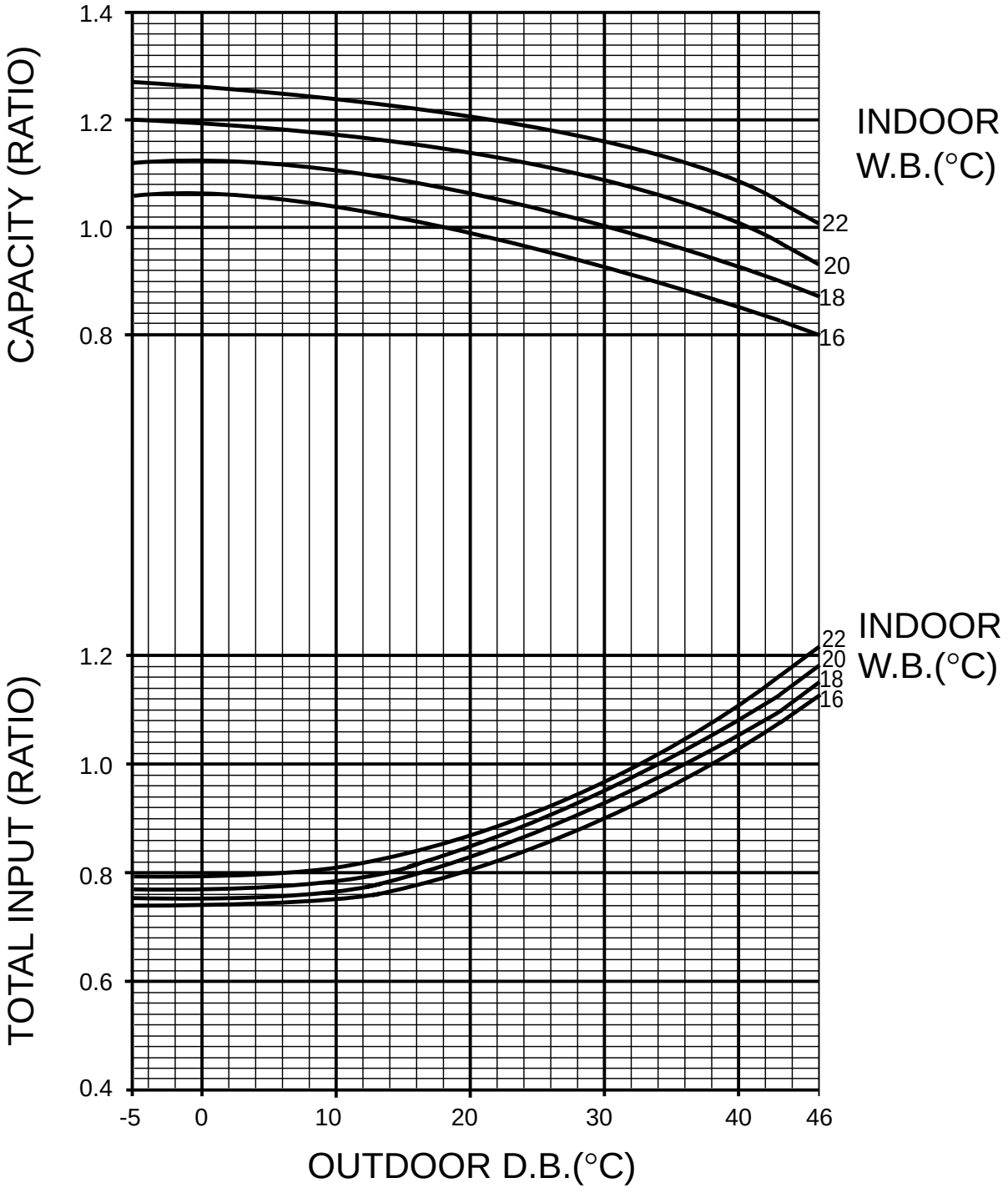

Note : This diagrams show the case where the operation frequency of a compressor is fixed.

Heating performance curve(50Hz)

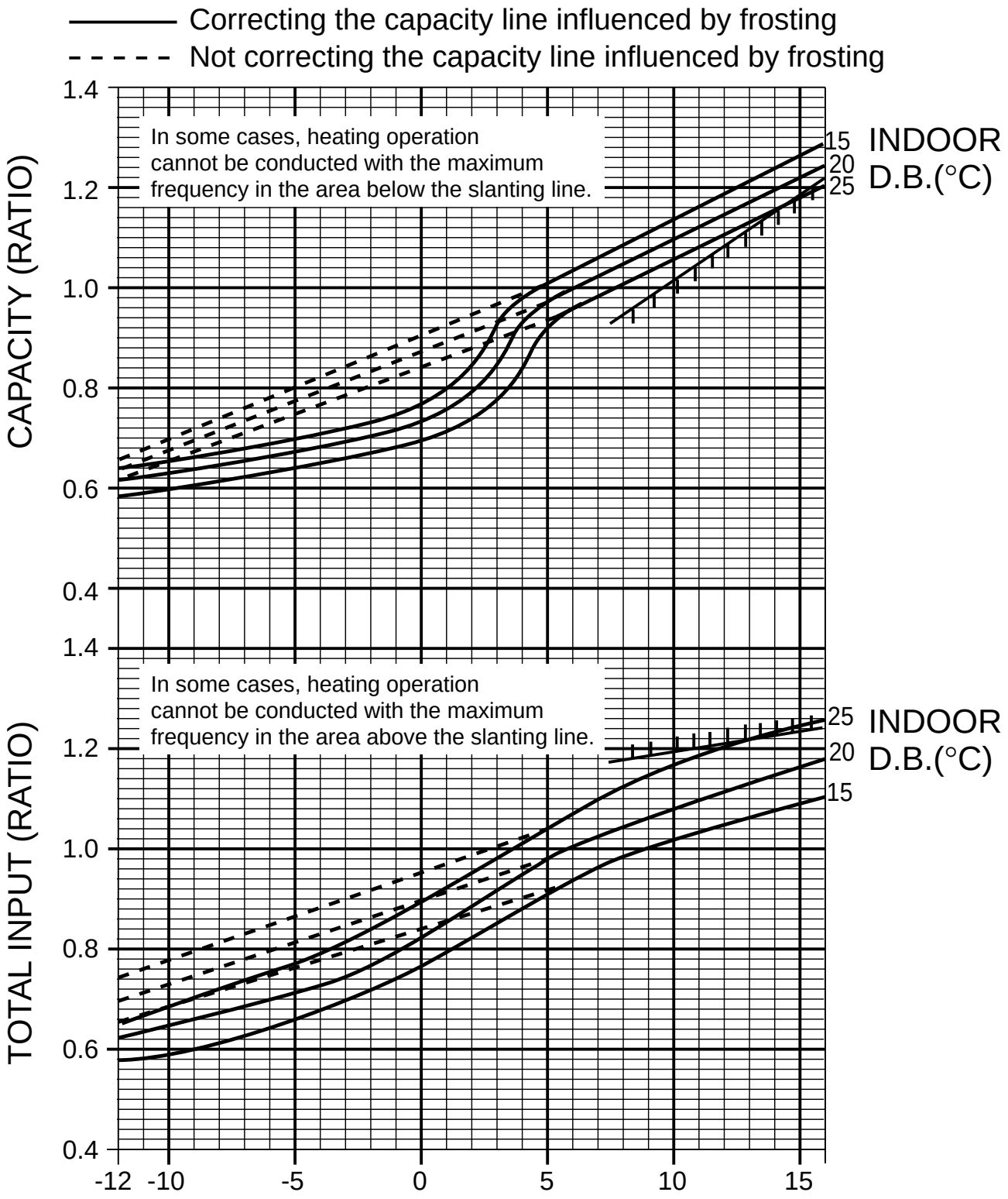

Note : This diagrams show the case where the operation frequency of a compressor is fixed.

6-2. FOR THE COMBINATION OF OUTDOOR UNIT PUHZ-RP200 / 250YHA

Cooling capacity

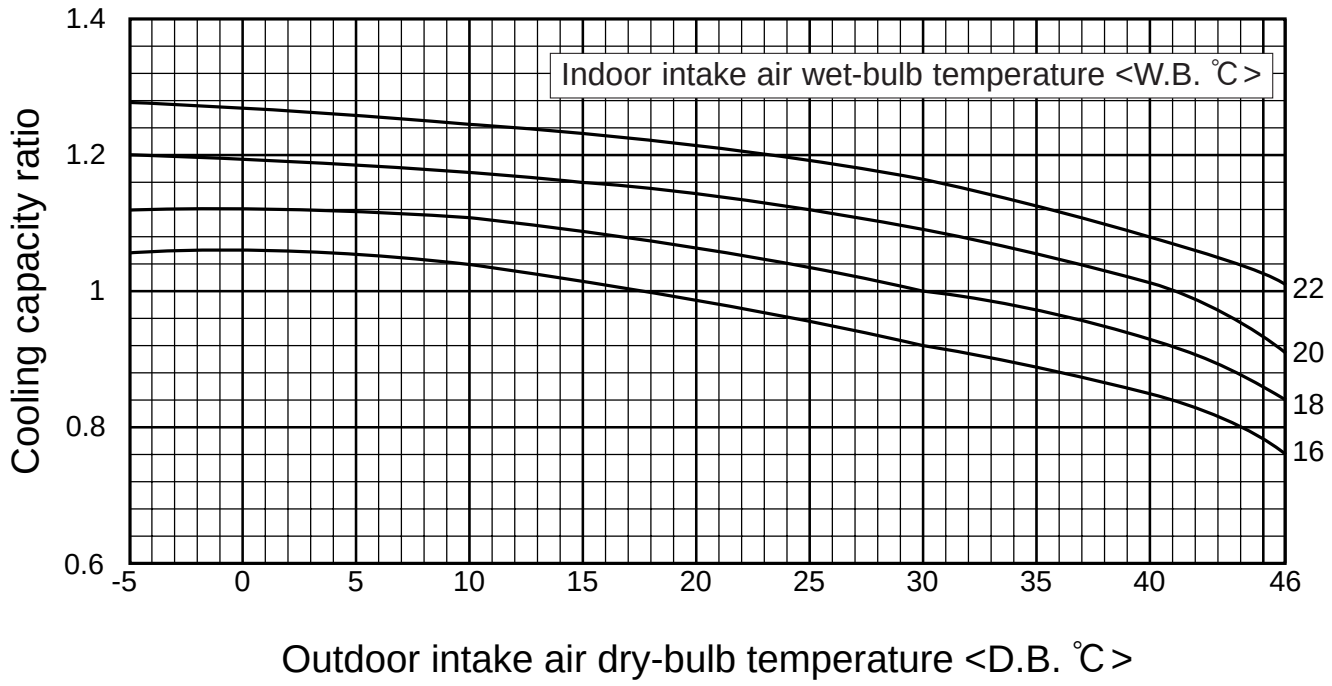

Cooling input

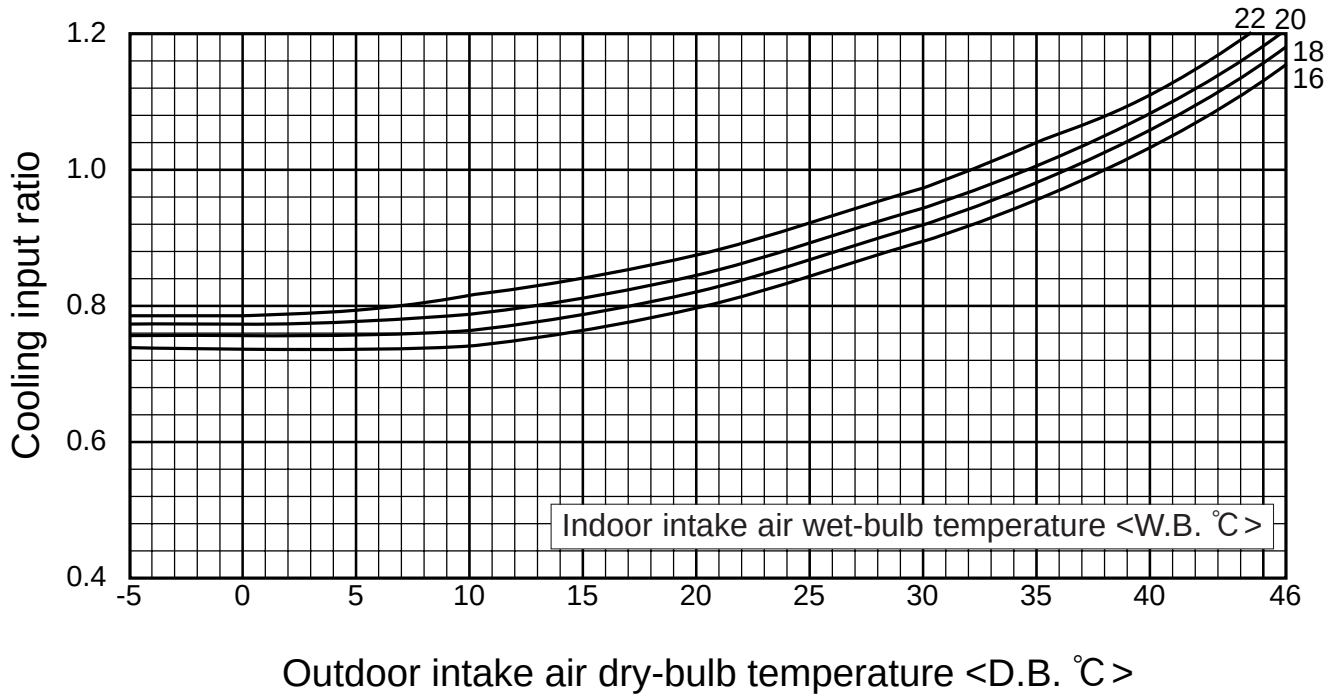

Note : This diagrams show the case where the operation frequency of a compressor is fixed.

Heating capacity

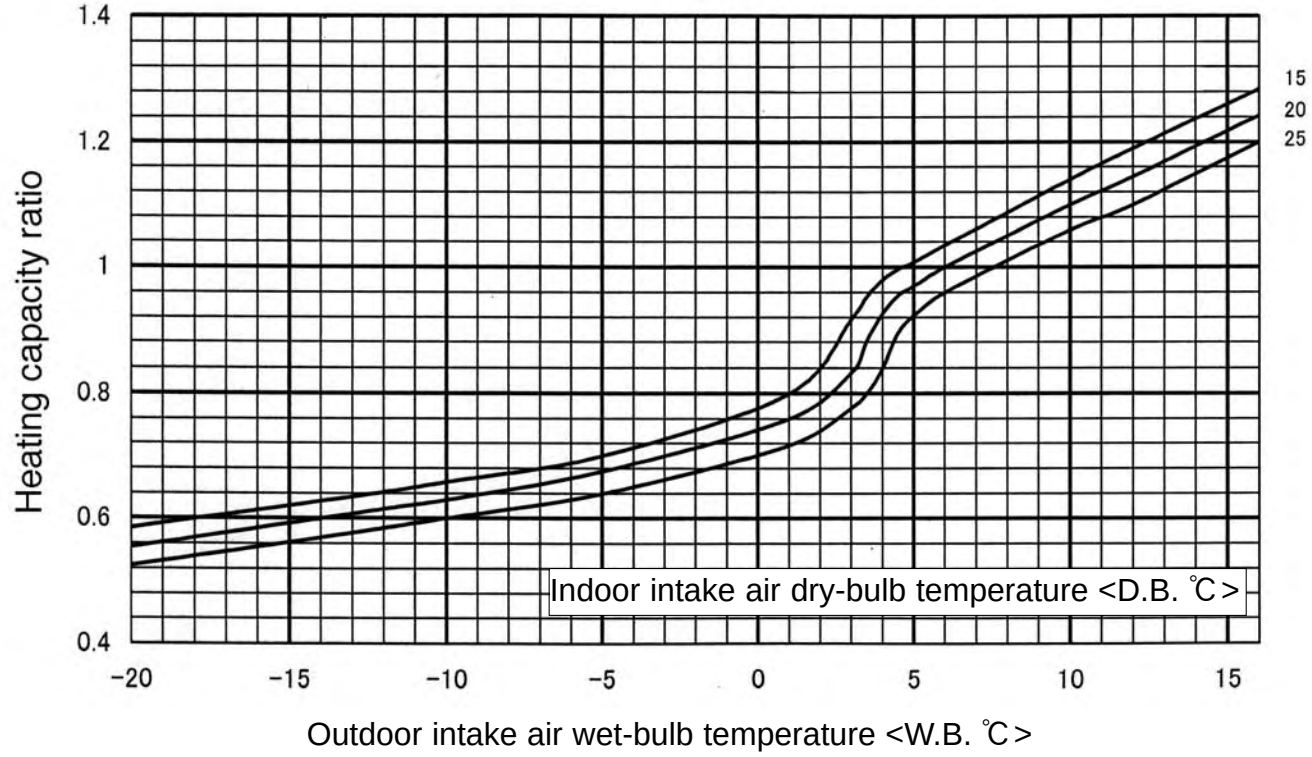

Heating input

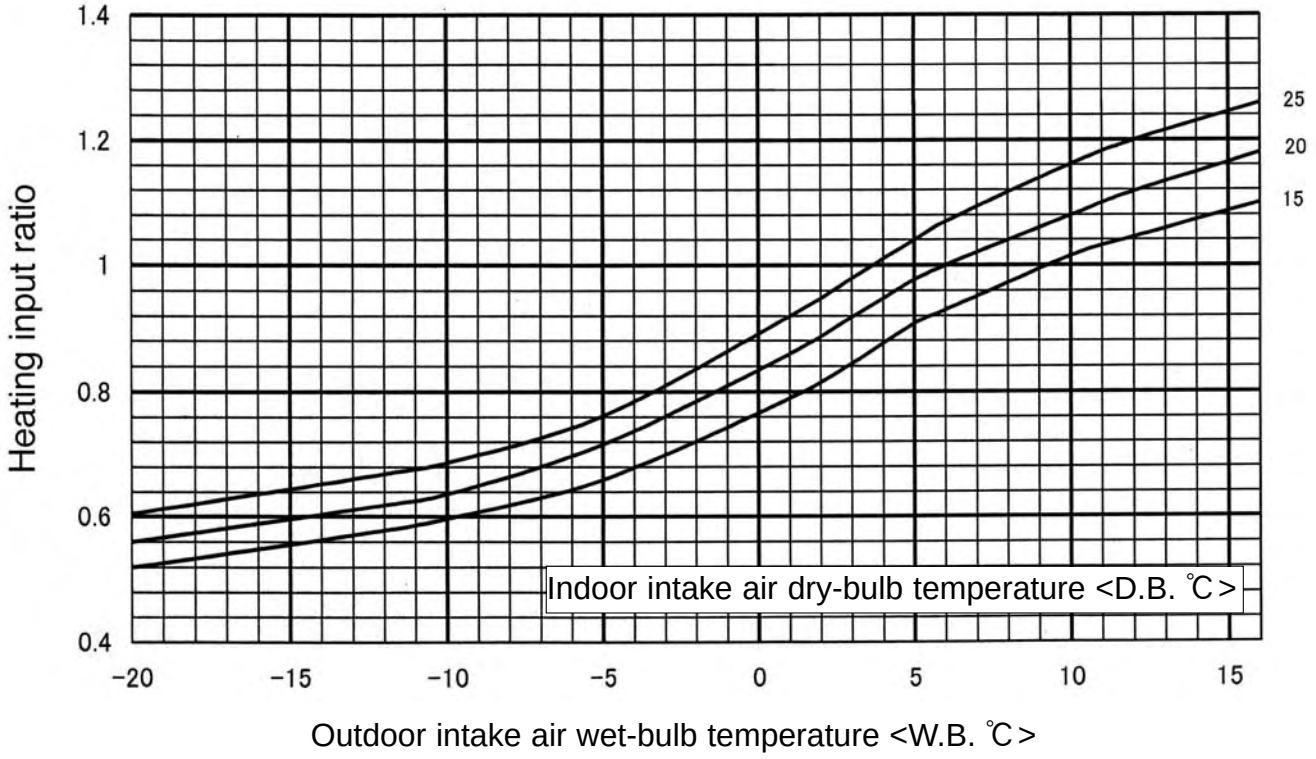

Note : This diagrams show the case where the operation frequency of a compressor is fixed.

7 CORRECTION FACTORS

7-1. PUHZ-RP·VHA, PUHZ-RP100~140YHA

Cooling capacity correction factors

Outdoor unit	Refrigerant piping length (one way)									
	5m	10m	20m	30m	40m	50m	55m	60m	70m	80m
PUHZ-RP35VHA	1.00	0.992	0.976	0.962	0.949	0.936	0.930	—	—	—
PUHZ-RP50VHA	1.00	0.985	0.957	0.931	0.908	0.886	0.876	—	—	—
PUHZ-RP60VHA	1.00	0.992	0.976	0.962	0.949	0.936	0.930	—	—	—
PUHZ-RP71VHA	1.00	0.988	0.966	0.946	0.929	0.913	0.905	—	—	—
PUHZ-RP100VHA PUHZ-RP100YHA	1.00	0.985	0.957	0.931	0.908	0.886	0.876	0.865	0.846	0.829
PUHZ-RP125VHA PUHZ-RP125YHA	1.00	0.981	0.946	0.914	0.885	0.858	0.845	0.834	0.812	0.792
PUHZ-RP140VHA PUHZ-RP140YHA	1.00	0.976	0.931	0.893	0.858	0.827	0.813	0.800	0.775	0.753

Heating capacity correction factors

Outdoor unit	Refrigerant piping length (one way)									
	5m	10m	20m	30m	40m	50m	55m	60m	70m	80m
PUHZ-RP35VHA	1.00	0.997	0.991	0.985	0.979	0.973	0.970	—	—	—
PUHZ-RP50VHA	1.00	0.997	0.991	0.985	0.979	0.973	0.970	—	—	—
PUHZ-RP60VHA	1.00	0.997	0.991	0.985	0.979	0.973	0.970	—	—	—
PUHZ-RP71VHA	1.00	0.997	0.991	0.985	0.979	0.973	0.970	—	—	—
PUHZ-RP100VHA PUHZ-RP100YHA	1.00	0.997	0.991	0.985	0.979	0.973	0.970	0.967	0.961	0.955
PUHZ-RP125VHA PUHZ-RP125YHA	1.00	0.997	0.991	0.985	0.979	0.973	0.970	0.967	0.961	0.955
PUHZ-RP140VHA PUHZ-RP140YHA	1.00	0.997	0.991	0.985	0.979	0.973	0.970	0.967	0.961	0.955

7-2. PUHZ-RP200·250YHA

Cooling capacity correction factors

Outdoor unit	Refrigerent piping length (one way)							
	5m	10m	15m	20m	25m	30m	35m	40m
PUHZ-RP200/250YHA	1.00	0.985	0.971	0.958	0.943	0.931	0.919	0.908

Outdoor unit	Refrigerent piping length (one way)							
	45m	50m	55m	60m	65m	70m	75m	80m
PUHZ-RP200/250YHA	0.898	0.887	0.876	0.865	0.855	0.847	0.838	0.829

Outdoor unit	Refrigerent piping length (one way)								
	85m	90m	95m	100m	105m	110m	115m	120m	125m
PUHZ-RP200/250YHA	0.823	0.815	0.808	0.800	0.797	0.790	0.785	0.780	0.778

Heaing capacity correction factors

Outdoor unit	Refrigerent piping length (one way)							
	5m	10m	15m	20m	25m	30m	35m	40m
PUHZ-RP200/250YHA	1.00	0.997	0.994	0.991	0.988	0.985	0.982	0.979

Outdoor unit	Refrigerent piping length (one way)							
	45m	50m	55m	60m	65m	70m	75m	80m
PUHZ-RP200/250YHA	0.976	0.973	0.970	0.967	0.964	0.961	0.958	0.955

Outdoor unit	Refrigerent piping length (one way)								
	85m	90m	95m	100m	105m	110m	115m	120m	125m
PUHZ-RP200/250YHA	0.952	0.949	0.946	0.943	0.940	0.937	0.934	0.931	0.928

8 APPLICABLE EXTENSION PIPE FOR EACH MODEL

8-1. PUHZ-RP·VHA, PUHZ-RP100~140YHA

The height difference between indoor and outdoor unit should be kept within 30 m for all models.

(1) 1:1 system

(a) Maximum pipe length

<Table 1> Pipe length for 1:1 system

Liquid pipe (mm)	OD	ϕ6.35			ϕ9.52			ϕ12.7	
	Thick-ness	t0.8			t0.8			t0.8	
Gas pipe (mm)	OD	ϕ9.52	ϕ12.7	ϕ15.88	ϕ12.7	ϕ15.88	ϕ19.05	ϕ15.88	ϕ19.05
	Thick-ness	t0.8	t0.8	t1.0	t0.8	t1.0	t1.0	t1.0	t1.0
RP35		□30m	◎50m	○30m	△30m	△30m (*1)	×	×	×
RP50		□10m	◎50m	○30m	△30m	△30m (*1)	×	×	×
RP60		×	□10m	○10m	□30m	◎50m	×	△30m	×
RP71		×	□10m	○10m	□30m	◎50m	×	△30m	×
RP100		×	×	×	×	◎75m (*2)	○50m (*1)	△50m	△50m (*1)
RP125		×	×	×	×	◎75m (*2)	○50m (*1)	△50m	△50m (*1)
RP140		×	×	×	×	◎75m (*2)	○50m (*1)	△50m	△50m (*1)

*1: Set DIP SW8-1 on outdoor unit controller board to ON.
*2: The maximum length is 50 m in case of using existing pipes.

[Marks in the table above]

◎ : Standard piping
△ : It can be used, however, additional refrigerant charge is required when the pipe length exceeds 20m. ➡ Refer to <table 4>.
× : It cannot be used.
○ : It can be used.
□ : It can be used, however, the capacity is lowered. ➡ Refer to (c) **Capacity correction.**

(b) Adjusting the amount of refrigerant

- Additional refrigerant charge is not necessary for the pipe length up to 30 m. When the pipe length exceeds 30 m or service (refrigerant replacement) is performed, charge proper amount of refrigerant for each pipe length referring to table below. Use refrigerant R410A. Use charge hose exclusive for R410A.
- When charging additional refrigerant, charge the refrigerant from low-pressure side of the port valve using a safety charger.
- Make sure that air purge for this unit at refrigerant replacement is performed from both high-pressure check valve and service port. If air purge is performed only from one of them, air in not purged enough.
- When replacing refrigerant, charge the refrigerant from service port. When charged refrigerant is less than specified amount, charge the refrigerant again from low pressure side of the port valve using a safety charger.
- Tighten the service port cap (nut) of stop valve firmly. The tightening torque is 12 to 16 N·m. (to prevent slow-leak)
- Check additional refrigerant charging amount referring to table 4 when liquid pipe is one size larger than standard diameter, and table 2 when the pipe is standard diameter.

<Table 2> Additional refrigerant charging amount for pipe of standard diameter

Outdoor unit	Permitted pipe length	Additional refrigerant charging amount for pipe length exceeding 30 m (kg)				Number of bends	Height difference
		31 — 40m	41 — 50m	51 — 60m	61 — 75m		
PUHZ-RP35, 50VHA	50m or less	0.2kg	0.4kg	—	—	15	30m or above
PUHZ-RP60, 71VHA	50m or less	0.6Kg	1.2Kg	—	—		
PUHZ-RP100-140VHA, RP100-140YHA	75m or less	0.6kg	1.2kg	1.8kg	2.4kg		

<Table 3>

Outdoor unit	Permitted pipe length	Recharge refrigerant amount or additional amount in parentheses						
		10m or below	11 — 20m	21 — 30m	31 — 40m	41 — 50m	51 — 60m	61 — 75m
PUHZ-RP35, 50VHA	50m or less	2.1	2.3	2.5	2.7 (0.2)	2.9 (0.4)	— —	— —
PUHZ-RP60, 71VHA	50m or less	3.1	3.3	3.5	4.1 (0.6)	4.7 (1.2)	— —	— —
PUHZ-RP100-140VHA PUHZ-RP100-140YHA	75m or less	4.6	4.8	5.0	5.6 (0.6)	6.2 (1.2)	6.8 (1.8)	7.4 (2.4)

<Table 4> Required additional charge when the pipe size is larger than the standard diameter

	Liquid pipe dia	Chargeless	Max. pipe length	Refrigerant amount to be added
RP35, 50	ϕ9.52	20m	30m	60 g per 1 m longer than 20 m
RP60, 71	ϕ12.7	20m	30m	100 g per 1 m longer than 20 m
RP100-140	ϕ12.7	20m	50m	100 g per 1 m longer than 20 m

(c) Capacity correction

Cooling and heating capacity is lowered according to pipe length. Capacity can be obtained by referring to the capacity curves below. When the diameter of gas pipe is one size smaller than standard diameter, cooling capacity is lowered comparing to the standard diameter. The lowered capacity can be obtained by referring to capacity curves for gas pipe which is one size smaller than standard size.

Corrected pipe length (m) = actual pipe length (m) + number of bends x 0.3 (m)

① Capacity curves for PUHZ-RP • HA model <Standard size>

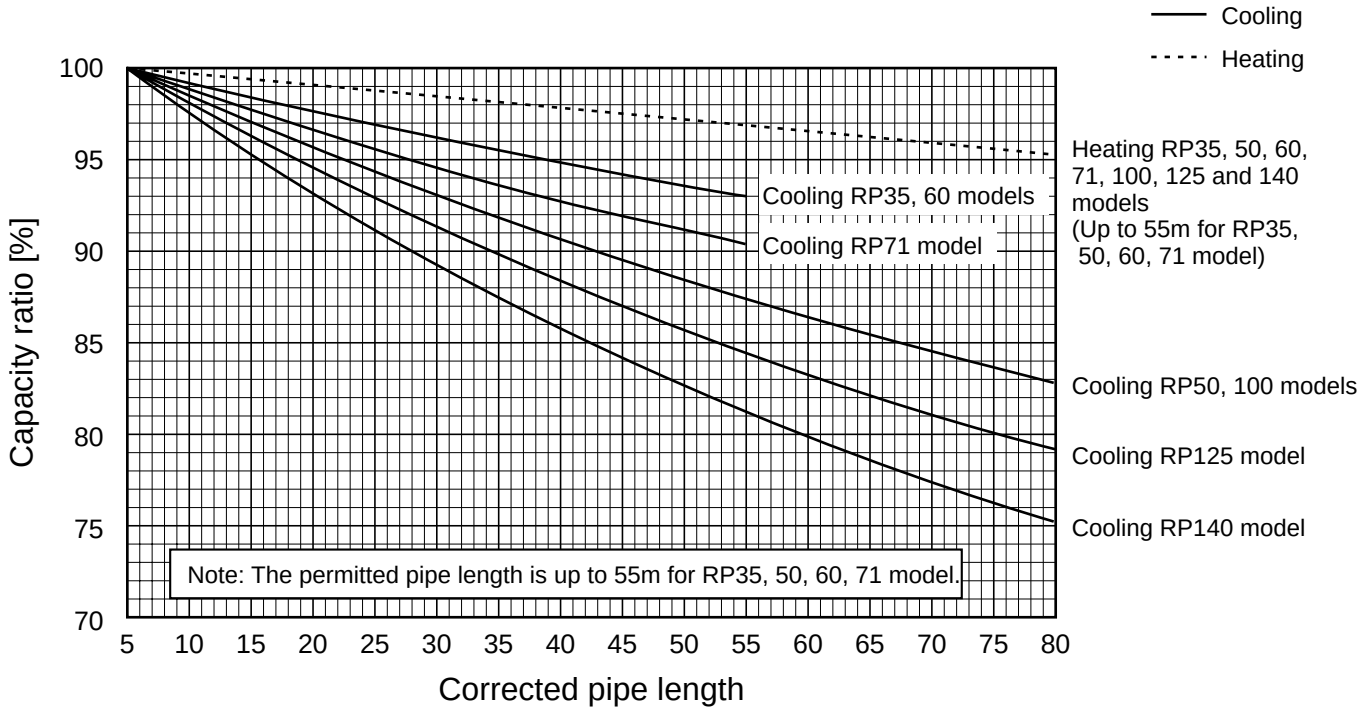

② Capacity curve for PUHZ-RP35, 50 models <When gas pipe is one size smaller than standard size>

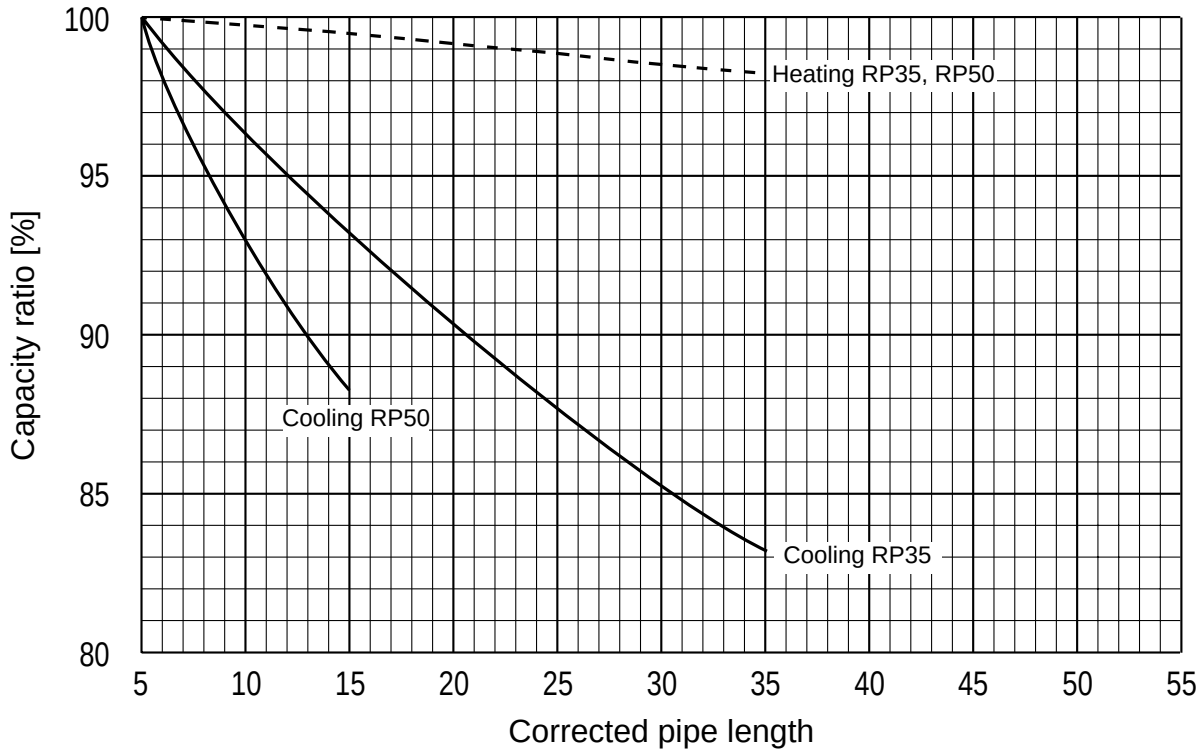

③ **Capacity curve for PUHZ-RP60, 71 models**
<When gas pipe is one size smaller than standard size>

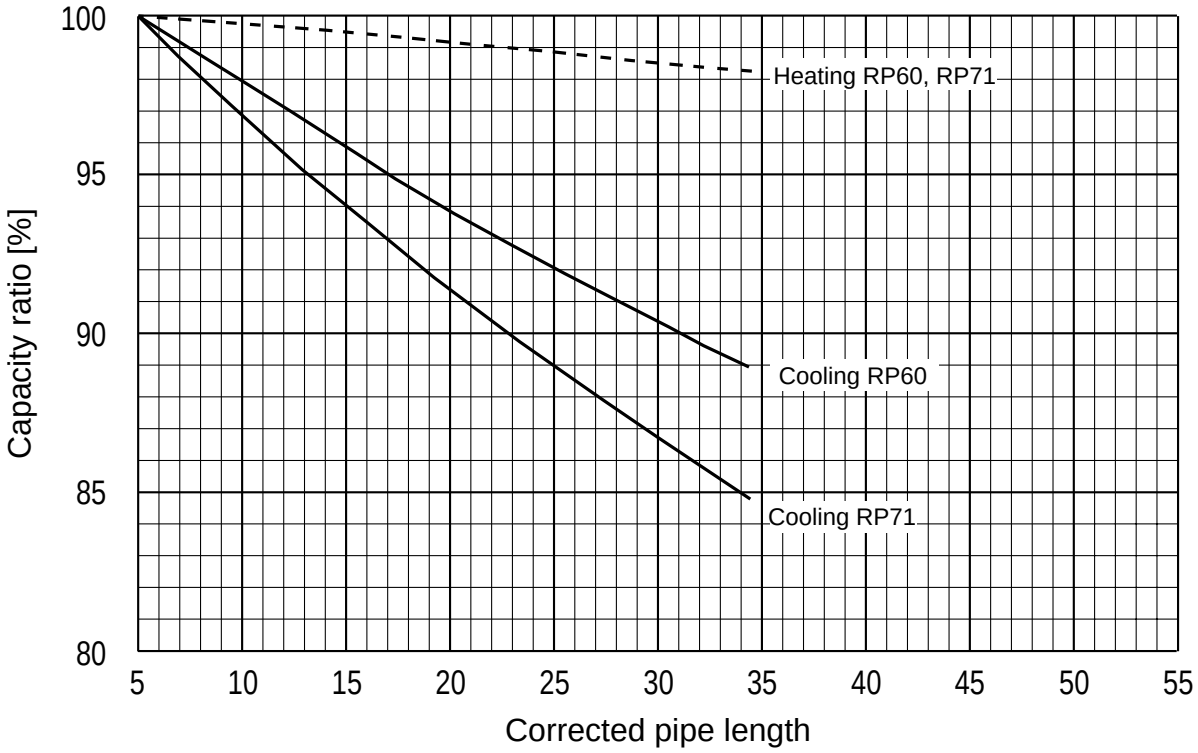

④ **When gas pipe is one size larger than standard size for PUHZ-RP100, 125 and 140.**

① Capacity can be obtained by referring to capacity curves of standard size.

8-2. PUHZ-RP200·250YHA

8-2-1. 1:1 SYSTEM

(1) Pipe length

<Table 1> Maximum pipe length (RP200·RP250)

Liquid pipe (mm)	OD	ϕ9.52				ϕ12.7				ϕ15.88			
	Thick-ness	t0.8				t0.8				t1.0			
gas pipe (mm)	OD	ϕ19.05	ϕ22.2	ϕ25.4	ϕ28.58	ϕ19.05	ϕ22.2	ϕ25.4	ϕ28.58	ϕ22.2	ϕ25.4	ϕ28.58	ϕ31.75
	Thick-ness	t1.0	t1.0	t1.0	t1.0	t1.0	t1.0	t1.0	t1.0	t1.0	t1.0	t1.0	t1.0
RP200		□ 20m [20m]	□ 50m [30m]	Normal piping 70m※1 [30m]	○SW 70m [30m]	□ 20m [20m]	□ 50m [30m]	○ 70m [30m]	○SW 70m [30m]	△ 50m [20m]	△ 50m [20m]	△SW 50m [20m]	※2 △SW 50m [20m]
RP250		□ 20m [20m]	□ 50m [30m]	○ 70m [30m]	○ 70m [30m]	□ 20m [20m]	□ 50m [30m]	○ 70m [30m]	Nomal piping 70m※1 [30m]	△ 50m [20m]	△ 50m [20m]	△ 50m [20m]	△※2 50m [20m]

Note : The maximum pipe length is 80m in case of new piping.
※1 Be sure to use hard (tempered) one for pipe over ϕ22.2.(Do not use soft (annealed) one.)
※2 When using ϕ31.75 pipe, the outdoor temperature range (dry-bulb temperature) for heating operation is -11 to +21℃.

<Marks in the table above>

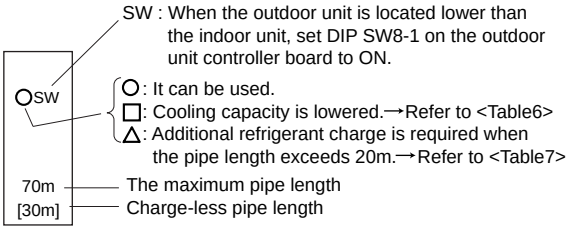

(2) Adjusting the amount of refrigerant

Check additional refrigerant charging amount referring to table 7 when the liquid pipe diameter is larger than the standard size, and table 2 when the pipe of the standard diameter is used.

<Table 2>

Outdoor unit	permitted pipe length	At time of shipping (kg)	Amount of additional refrigerant charge (kg)					
			30 m and less	31-40 m and less	41-50 m and less	51-60 m and less	61-70 m and less	71-120 m and less
RP200	120m or less	10.5	No additional charge necessary	0.9 kg	1.8 kg	2.7 kg	3.6 kg	The additional charge amount is obtained by the following formula.
RP250		10.5		1.2 kg	2.4 kg	3.6 kg	4.8 kg	

Calculate the additional charge amount based on the following procedure.
If the calculation results in an amount that is smaller than the "Additional charge amount for 70m," perform the additional charge using the amount shown in "Additional charge amount for 70m."

Amount of additional charge [kg]	=	Main piping: Liquid line size ϕ12.7 over all length [m] × 0.12 [kg/m]	+	Main piping: Liquid line size ϕ9.52 overall length [m] × 0.09 [kg/m]	+	Branch piping: Liquid line size ϕ9.52 overall length [m] × 0.06 [kg/m]	+	Branch piping: Liquid line size ϕ6.35 overall length [m] × 0.02 [kg/m]	−	3.6 (kg)

Additional charge amount for 70 m	RP200	3.6 kg
	RP250	4.8 kg

•If the wiring connecting the indoor and outdoor units is longer than 80m. use separate indoor /outdoor unit power supplies.

(3) Capacity correction

Cooling and heating capacity is lowered according to the piping length. Capacity can be obtained by referring to the following capacity curves.

When the diameter of the gas pipe is smaller than the standard size, cooling capacity is lowered comparing to the operation using the standard diameter pipe.

The lowered capacity can be obtained by referring to the capacity curves for gas pipe which is one or two size smaller than standard size.

Corrected pipe length (m) = actual pipe length (m) + number of bends × 0.3 (m)

1. Capacity curves 1 <Standard size>

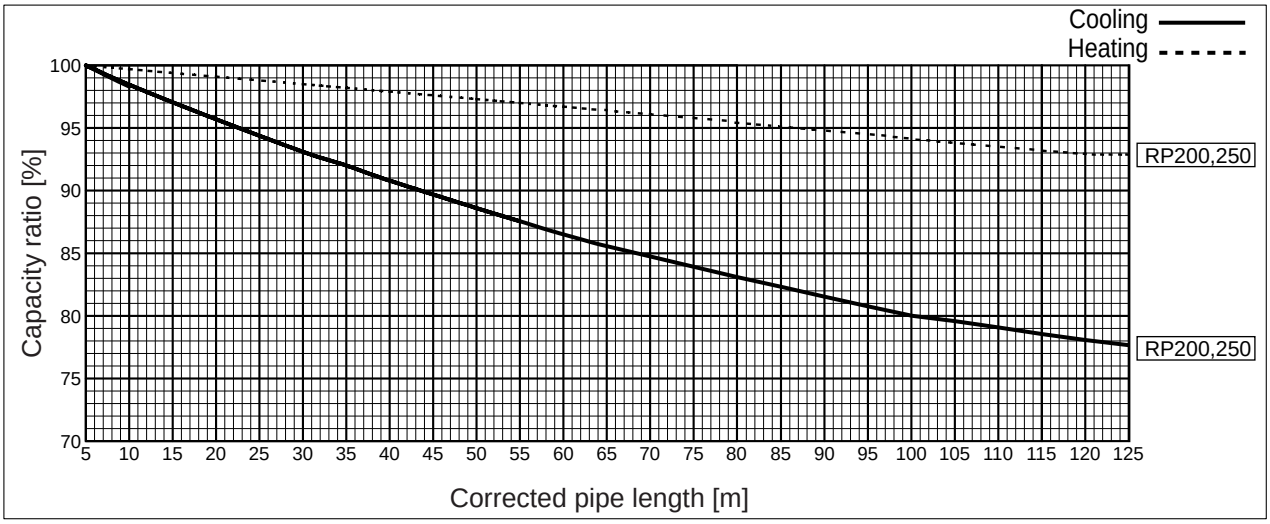

2. Capacity curves 2 <When the gas pipe's diameter is one-size-smaller than the standard size>

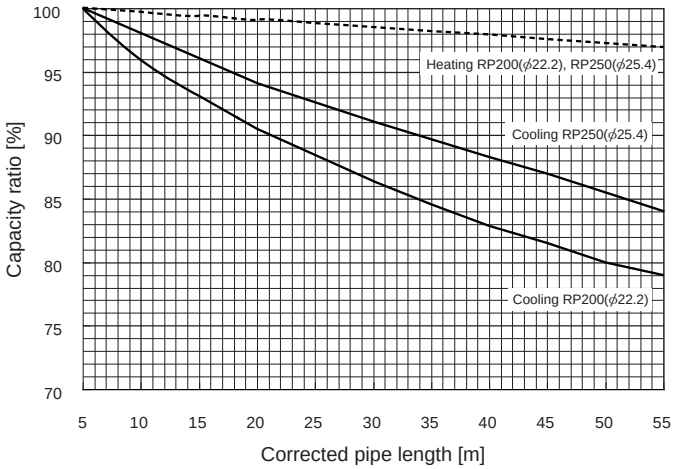

3. Capacity curves 3 <When the gas pipe's diameter is two-size-smaller than the standard size>

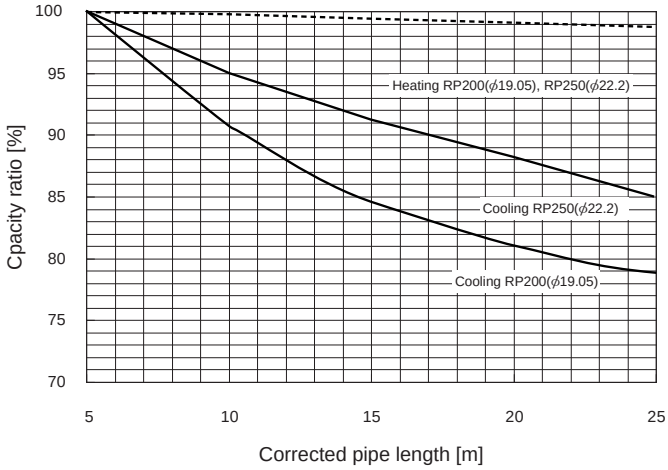

8-2-2. SYNCHRONIZED TWIN, TRIPLE AND QUADRUPLE SYSTEM

(1) Synchronized twin

Maximum pipe length (Main pipe[A]+Branch pipe diameter [B and C])

			RP200 twin (RP100×2)												RP250 twin (RP125×2)											
Main pipe (mm)[A]	Liquid pipe		ϕ9.52				ϕ12.7				ϕ15.88				ϕ9.52				ϕ12.7				ϕ15.88			
	Gas pipe		ϕ19.05	ϕ22.2	ϕ25.4	ϕ28.58	ϕ19.05	ϕ22.2	ϕ25.4	ϕ28.58	ϕ22.2	ϕ25.4	ϕ28.58	ϕ31.75	ϕ19.05	ϕ22.2	ϕ25.4	ϕ28.58	ϕ19.05	ϕ22.2	ϕ25.4	ϕ28.58	ϕ22.2	ϕ25.4	ϕ28.58	ϕ31.75
Branch pipe [mm] [B, C]	Liquid pipe	ϕ6.35																								
	Gas pipe	ϕ12.7																								
	Liquid pipe	ϕ9.52	□ 20m [20m]	□ 50m [30m]	Normal piping 70m※1 [30m]	○ SW 70m [30m]	□ 20m [20m]	□ 50m [30m]	○ 70m [30m]	○ SW 70m [30m]	△ 50m [20m]	△ 50m [20m]	△ SW 50m [20m]	※2△SW 50m [20m]	□ 20m [20m]	□ 50m [30m]	○ 70m [30m]	○ 70m [30m]	□ 20m [20m]	□ 50m [30m]	○ 70m [30m]	Normal piping 70m※1 [30m]	△ 50m [20m]	△ 50m [20m]	△ 50m [20m]	※2△ 50m [20m]
	Gas pipe	ϕ15.88																								
	Liquid pipe	ϕ9.52	□ 20m [20m]	□ 50m [30m]	○ 70m [30m]	○ SW 70m [30m]	□ 20m [20m]	□ 50m [30m]	○ 70m [30m]	○ SW 70m [30m]	△ 50m [20m]	△ 50m [20m]	△ SW 50m [20m]	※2△SW 50m [20m]	□ 20m [20m]	□ 50m [30m]	○ 70m [30m]	○ 70m [30m]	□ 20m [20m]	□ 50m [30m]	○ 70m [30m]	○ 70m [30m]	△ 50m [20m]	△ 50m [20m]	△ 50m [20m]	※2△ 50m [20m]
	Gas pipe	ϕ19.05																								
	Liquid pipe	ϕ12.7	□ 20m [20m]	□ 50m [30m]	○ 70m [30m]	○ SW 70m [30m]	□ 20m [20m]	□ 50m [30m]	○ 70m [30m]	○ SW 70m [30m]	△ 50m [20m]	△ 50m [20m]	△ SW 50m [20m]	※2△SW 50m [20m]	□ 20m [20m]	□ 50m [30m]	○ 70m [30m]	○ 70m [30m]	□ 20m [20m]	□ 50m [30m]	○ 70m [30m]	○ 70m [30m]	△ 50m [20m]	△ 50m [20m]	△ 50m [20m]	※2△ 50m [20m]
	Gas pipe	ϕ19.05																								

※1 The maximum pipe length is 80m in case of new pipping.
※2 When using ϕ31.75 pipe, the outdoor temperature range (dry-bulb temperature) for heating operation is -11 to +21℃.

(2) Synchronized triple

Maximum pipe length (Main pipe [A] + Branch pipe [B, C and D])

			RP200 triple (RP60×3)												RP250 triple (RP71×3)											
Main pipe (mm)[A]	Liquid pipe		ϕ9.52				ϕ12.7				ϕ15.88				ϕ9.52				ϕ12.7				ϕ15.88			
	Gas pipe		ϕ19.05	ϕ22.2	ϕ25.4	ϕ28.58	ϕ19.05	ϕ22.2	ϕ25.4	ϕ28.58	ϕ22.2	ϕ25.4	ϕ28.58	ϕ31.75	ϕ19.05	ϕ22.2	ϕ25.4	ϕ28.58	ϕ19.05	ϕ22.2	ϕ25.4	ϕ28.58	ϕ22.2	ϕ25.4	ϕ28.58	ϕ31.75
Branch pipe [mm] [B, C, D]	Liquid pipe	ϕ6.35																								
	Gas pipe	ϕ12.7																								
	Liquid pipe	ϕ9.52	□ 20m [20m]	□ 50m [30m]	Normal piping 70m※1 [30m]	○ SW 70m [30m]	□ 20m [20m]	□ 50m [30m]	○ 70m [30m]	○ SW 70m [30m]	△ 50m [20m]	△ 50m [20m]	△ SW 50m [20m]	※2△SW 50m [20m]	□ 20m [20m]	□ 50m [30m]	○ 70m [30m]	○ 70m [30m]	□ 20m [20m]	□ 50m [30m]	○ 70m [30m]	Normal piping 70m※1 [30m]	△ 50m [20m]	△ 50m [20m]	△ 50m [20m]	※2△ 50m [20m]
	Gas pipe	ϕ15.88																								
	Liquid pipe	ϕ9.52	□ 20m [20m]	□ 50m [30m]	○ 70m [30m]	○ SW 70m [30m]	□ 20m [20m]	□ 50m [30m]	○ 70m [30m]	○ SW 70m [30m]	△ 50m [20m]	△ 50m [20m]	△ SW 50m [20m]	※2△SW 50m [20m]	□ 20m [20m]	□ 50m [30m]	○ 70m [30m]	○ 70m [30m]	□ 20m [20m]	□ 50m [30m]	○ 70m [30m]	○ 70m [30m]	△ 50m [20m]	△ 50m [20m]	△ 50m [20m]	※2△ 50m [20m]
	Gas pipe	ϕ19.05																								
	Liquid pipe	ϕ12.7	□ 20m [20m]	□ 50m [30m]	○ 70m [30m]	○ SW 70m [30m]	□ 20m [20m]	□ 50m [30m]	○ 70m [30m]	○ SW 70m [30m]	△ 50m [20m]	△ 50m [20m]	△ SW 50m [20m]	※2△SW 50m [20m]	□ 20m [20m]	□ 50m [30m]	○ 70m [30m]	○ 70m [30m]	□ 20m [20m]	□ 50m [30m]	○ 70m [30m]	○ 70m [30m]	△ 50m [20m]	△ 50m [20m]	△ 50m [20m]	※2△ 50m [20m]
	Gas pipe	ϕ19.05																								

※1 The maximum pipe length is 80m in case of new pipping.
※2 When using ϕ31.75 pipe, the outdoor temperature range (dry-bulb temperature) for heating operation is -11 to +21℃.

(3) Synchronized quadruple

Maximum pipe length (Main pipe[A]+Branch pipe [B, C, D and E])

			RP200 quadruple (RP50×4)												RP250 quadruple (RP60×4)											
Main pipe (mm)[A]	Liquid pipe		ϕ9.52				ϕ12.7				ϕ15.88				ϕ9.52				ϕ12.7				ϕ15.88			
	Gas pipe		ϕ19.05	ϕ22.2	ϕ25.4	ϕ28.58	ϕ19.05	ϕ22.2	ϕ25.4	ϕ28.58	ϕ22.2	ϕ25.4	ϕ28.58	ϕ31.75	ϕ19.05	ϕ22.2	ϕ25.4	ϕ28.58	ϕ19.05	ϕ22.2	ϕ25.4	ϕ28.58	ϕ22.2	ϕ25.4	ϕ28.58	ϕ31.75
Branch pipe [mm] [B, C, D, E]	Liquid pipe	ϕ6.35	□ 20m [20m]	□ 50m [30m]	Normal piping 70m※1 [30m]	○ SW 70m [30m]	□ 20m [20m]	□ 50m [30m]	○ 70m [30m]	○ SW 70m [30m]	△ 50m [20m]	△ 50m [20m]	△ SW 50m [20m]	※2△SW 50m [20m]												
	Gas pipe	ϕ12.7																								
	Liquid pipe	ϕ9.52	□ 20m [20m]	□ 50m [30m]	○ 70m [30m]	○ SW 70m [30m]	□ 20m [20m]	□ 50m [30m]	○ 70m [30m]	○ SW 70m [30m]	△ 50m [20m]	△ 50m [20m]	△ SW 50m [20m]	※2△SW 50m [20m]	□ 20m [20m]	□ 50m [30m]	○ 70m [30m]	○ 70m [30m]	□ 20m [20m]	□ 50m [30m]	○ 70m [30m]	Normal piping 70m※1 [30m]	△ 50m [20m]	△ 50m [20m]	△ 50m [20m]	※2△ 50m [20m]
	Gas pipe	ϕ15.88																								
	Liquid pipe	ϕ9.52	□ 20m [20m]	□ 50m [30m]	○ 70m [30m]	○ SW 70m [30m]	□ 20m [20m]	□ 50m [30m]	○ 70m [30m]	○ SW 70m [30m]	△ 50m [20m]	△ 50m [20m]	△ SW 50m [20m]	※2△SW 50m [20m]	□ 20m [20m]	□ 50m [30m]	○ 70m [30m]	○ 70m [30m]	□ 20m [20m]	□ 50m [30m]	○ 70m [30m]	○ 70m [30m]	△ 50m [20m]	△ 50m [20m]	△ 50m [20m]	※2△ 50m [20m]
	Gas pipe	ϕ19.05																								
	Liquid pipe	ϕ12.7													□ 20m [20m]	□ 50m [30m]	○ 70m [30m]	○ 70m [30m]	□ 20m [20m]	□ 50m [30m]	○ 70m [30m]	○ 70m [30m]	△ 50m [20m]	△ 50m [20m]	△ 50m [20m]	※2△ 50m [20m]
	Gas pipe	ϕ19.05																								

※1 The maximum pipe length is 80m in case of new pipping.
※2 When using ϕ31.75 pipe, the outdoor temperature range (dry-bulb temperature) for heating operation is -11 to +21℃.

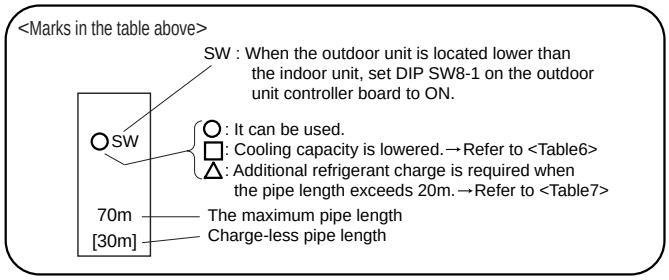

Pipe diameter and thickness

OD (mm)	ϕ6.35	ϕ9.52	ϕ12.7	ϕ15.88	ϕ19.05	ϕ22.2	ϕ25.4	ϕ28.58	ϕ31.75
Thickness (mm)	0.8	0.8	0.8	1.0	1.0	1.0	1.0	1.0	1.1

Be sure to use hard (tempered) one for pipe over ϕ22.2.(Do not use soft (annealed) one.)

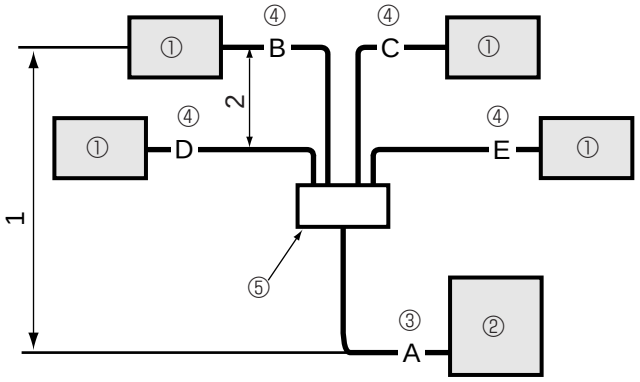

① Indoor unit
② Outdoor unit
③ Main piping
④ Branch piping
⑤ Multi disttibution pipe (option)

1 Height difference (Indoor unit-Outdoor unit) Max. 40 m

2 Height difference (Indoor unit-Indoor unit) Max. 8 m

3 Distance between indoor and indoor units pipe length. Max. 8m

|B—C| |B—D| |B—E|
|C—D| |C—E| |D—E|

4 Number of pipe bends
Within 15
points8 points between main pipe A and each branch pipe (B, C, D, E).

<Table 6> Lowered cooling capacity by the smaller gas pipe diameter

Pipe length	RP200 Cooling capacity ratio		RP250 Cooling capacity ratio	
	gas pipe ϕ22.2	gas pipe ϕ19.05	gas pipe ϕ25.4	gas pipe ϕ22.2
5m and less	100%	100%	100%	100%
6~10m	100~96%	100~91%	100~98%	100~95%
11~20m	96~91%	91~81%	98~94%	95~88%
21~30m	91~86%	—	94~91%	—
31~40m	86~83%	—	91~88%	—
41~50m	83~80%	—	88~86%	—

<Table 7> Additional refrigerant amount when the liquid pipe of the larger diameter is used.
(Single /Simultaneous Twin / Simultaneous Triple / Simultaneous Quadruple)

Capacity	When the extension pipe length (main piping + branch piping) exceeds 20m
RP200, RP250	Additional refrigerant amount$\triangle$W(g)=(180×L_1)+(120×L_2) (90×L_3)+(30×L_4)-3000

L_1 : ϕ15.88 liquid pipe (m) L_2 : ϕ12.7 liquid pipe (m)
L_3 : ϕ9.52 liquid pipe (m) L_4 : ϕ6.35 liquid pipe (m)

If the calculation produces a negative number (i.e. a "minus" charge), additional charging is not necessary.
($\triangle$W ≦ 0)

<Table 8>

Outdoor unit	Permissible total piping length A+B+C+D+E	A+B or A+C or A+D or A+E	Charge-less piping length A+B+C+D+E
RP200 PR250	120 m and less	100 m and less	30 m and less

<Table 9>

Outdoor unit	| B-C | or | B-D | or | B-E |or | C-D | or | C-E | or | D-E |	Number of pipe bends
RP200 RP250	8 m and less	Within 15

<Table 10>

Outdoor unit	permitted pipe length	At time of shipping (kg)	A+B+C+D Amount of additional refrigerant charge (kg)					
			30 m and less	31-40 m and less	41-50 m and less	51-60 m and less	61-70 m and less	71-120 m and less
RP200	120m or less	10.5	No additional charge necessary	0.9 kg	1.8 kg	2.7 kg	3.6 kg	The additional charge amount is obtained by the following formula.
RP250		10.5		1.2 kg	2.4 kg	3.6 kg	4.8 kg	

When length exceeds 70 m

When the total length of the piping exceeds 70 m, calculate the amount of additional charge based on the following requirements.
Note: If the calculation produces a negative number (i.e. a “minus” charge), of if calculation results in an amount that is less than the “Additional charge amount for 70 m,”perform the additional charge using the amount shown in “Additional charge amount for 70 m.”

Amount of additional charge	=	Main piping: Liquid line size ϕ12.7 overall length 0.12	+	Main piping: Liquid line size ϕ9.52 overall length 0.09 (Gas line:ϕ28.58)	+	Branch piping: Liquid line size ϕ9.52 overall length 0.06 (Gas line: ϕ15.88)	+	Branch piping: Liquid line size ϕ6.35 overall length 0.02 (Gas line: ϕ15.88)	–	3.6 (kg)

Additional charge amount for 70 m	RP200	3.6 kg
	RP250	4.8 kg

1. Perform refrigerant piping connections for the indoor / outdoor unit while the outdoor unit's stopvalve is completely closed (factory setting), and then vacuumize the refrigerant lines through the service port of the outdoor unit.
2. Open the stop valves of the outdoor unit completely.
   This will completely connects the refrigerant lines of the indoor and outdoor units.
   Handling of the stop valve is shown on the outdoor unit.

Note :

- Apply refrigerating machine oil over the flare seat surface. Do not apply to the threaded portion. (It will cause the flare nut to loosen.)
- Use two wrenches to tighten piping connection.
- Use leak detector or soapy water to check for gas leaks after connections are completed.
- For the insulation of the connection at the indoor side, make sure to use the attached insulation materials and thoroughly follow the instruction shown in the manual.
- Always use a non-oxidizing brazing material when brazing the pipes.

Adjusting the amount of refrigerant

Check additional refrigerant charging amount referring to the procedure ② below when the liquid pipe diameter of the main piping A is larger than the standard size.

① When the standard diameter pipe is used for the main piping A, calculate the additional refrigerant amount by referring to <Table 2> as well as the 1:1 system.

② When the liquid pipe diameter of the main piping A is one size larger than the standard size:

- When the extension pipe length (main piping + branch piping) does not exceeds 20m, adjustment of the refrigerant is not necessary (charge-less).
- When the extension pipe length (main piping + branch piping) exceeds 20m, charge the amount of refrigerant that is obtained by the formula shown in <Table 7>.

If the calculation produces a negative number (i.e. a "minus" charge), additional charging is not necessary.
Note: Apply 0 to L1 to L3 corresponding to the piping that are not used.

Correcting the capacity value

When calculating the lowered capacity by the extension pipe length, use the longest length between the indoor and the outdoor units.

9 AIR FLOW DATA

9-1. OUTLET AIR SPEED AND COVERAGE RANGE

		PLA-RP35AA	PLA-RP50AA	PLA-RP60AA	PLA-RP71AA	PLA-RP100AA	PLA-RP125AA	PLA-RP140AA
Air flow	m^3/min.	14	18	18	20	28	30	30
Air speed	m/sec.	2.8	3.6	3.6	4.0	4.9	6.6	6.6
Coverage range	m	4.0	5.2	5.2	5.7	7.4	8.9	8.9

		PCA-RP50GA	PCA-RP60GA	PCA-RP71GA	PCA-RP100GA	PCA-RP125GA	PCA-RP140GA
Air flow	m^3/min	13	18	18	25	34	34
Air speed	m/sec	3.7	3.8	3.8	4.1	4.4	4.4
Coverage range	m	8.8	10.4	10.4	12.6	15.2	15.2

		PCA-RP71HA	PCA-RP125HA
Air flow	m^3/min	19	38
Air speed	m/sec	2.9	4.2
Coverage range	m	7.9	13.2

	PKA-RP35GAL	PKA-RP50GAL
Air flow m^3/min	12	12
Air speed m/sec	5.3	5.3
Coverage range m (ft)	10(32.8)	10(32.8)

	PKA-RP60FAL	PKA-RP71FAL	PKA-RP100FAL
Air flow m^3/min	20	20	28
Air speed m/sec	4.9	4.9	5.4
Coverage range m (ft)	12.4(40.7)	12.4(40.7)	15.3(50.2)

		PSA-RP71GA	PSA-RP100GA	PSA-RP125GA	PSA-RP140GA
Air flow	m^3/min	18	31	33	35
Air speed	m/sec	2.6	4.5	4.8	4.9
Coverage range	m	8.3	14.3	15.2	16.1

The air coverage range is the value up to the position where the air speed is 0.25m/sec. when air is blown out horizontally from the unit at the Hi notch position.
The coverage range should be used only as a general guideline since it varies according to the size of the room and the furniture inside the room.

9-2. PLA-RP·AA

9-2-1. FRESH AIR INTAKE AMOUNT

1. Adjusting the width of the air outlets

- **Change of outlet numbers**
  [The optional air outlet shutter is necessary.]

  To change the air outlet numbers to 3-, or 2-way outlet, the outlets should be closed with the optional air outlet shutter.)

  (When the air outlets are closed, close the vane by removing the vane connector.)

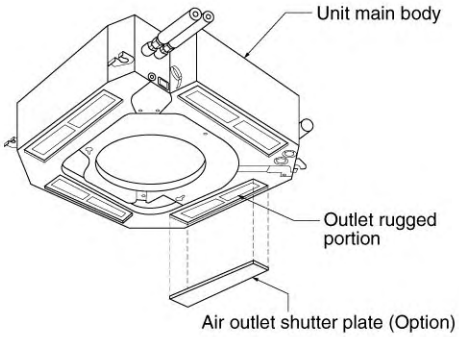

- **For the portion to be cut (V-shaped groove), see the figure below (as seen from the rear of the panel).**

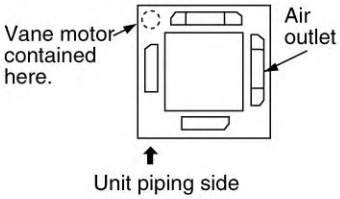

2. Fresh air intake (Installation of site)

- By mounting the optional multi-function casement to the indoor unit main body, and mounting the duct and duct flange (field supply) onto it further, fresh exterior air intake can be accomplished.
  (The mounting of the multi-function casement increases the height of the ceiling plenum by 135mm.)

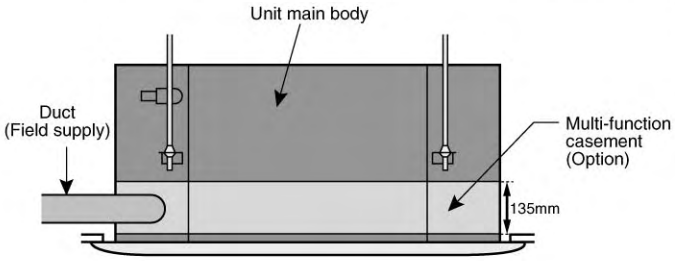

Direct exterior air intake into the main body is also possible.

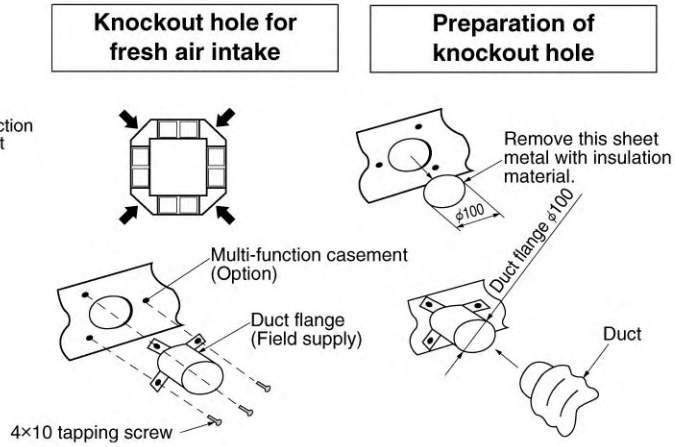

3. Fresh air intake volume & static pressure characteristics

① PLA-RP71AA
(at using of multi-function casement, standard filter)

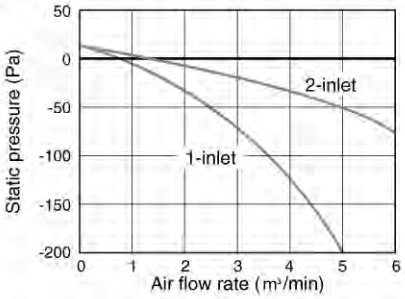

② PLA-RP71AA (Direct intake to unit)

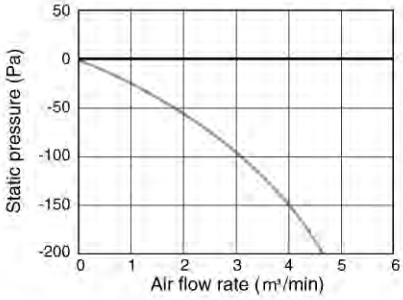

③ PLA-RP100/RP125/RP140AA
(at using of multi-function casement, standard filter)

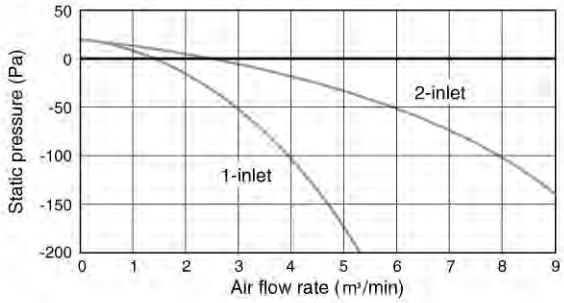

④ PLA-RP100/RP125/RP140AA (Direct intake to unit)

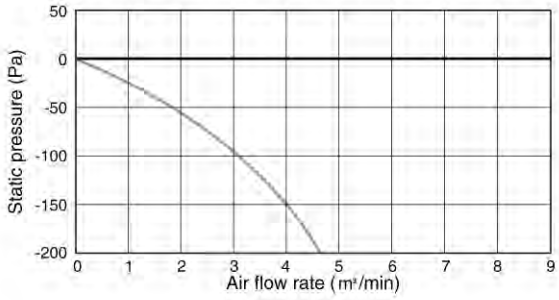

How to read the chart

(1)

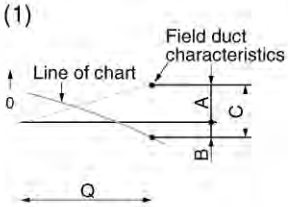

(2)

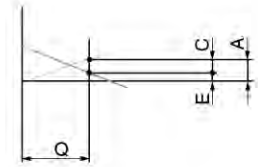

(3)

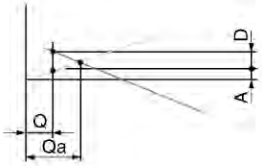

Q .... Design fresh air intake volume (m³/min)

A ..... Static pressure loss [Pa] of fesh air intake duct at air flow rate of Q

B ..... Required boost pressure [Pa] of air conditioner inlet at air flow rate of Q

C ..... Required static pressure [Pa] of booster fan at air flow rate of Q

D ..... Required compensation [Pa] for static prssure loss of fresh air intake duct to make air flow rate Q

E ..... Static pressure [Pa] of indoor unit at air flow rate of Q

Qa .. Estimated fresh air intake [m³/min] without compensation of D

9-2-2. BRANCH DUCT (Installation at site)

To be compatible with both round and rectangular branch ducts, knockout holes are designed to fit to both shapes for flexible on-site installation.

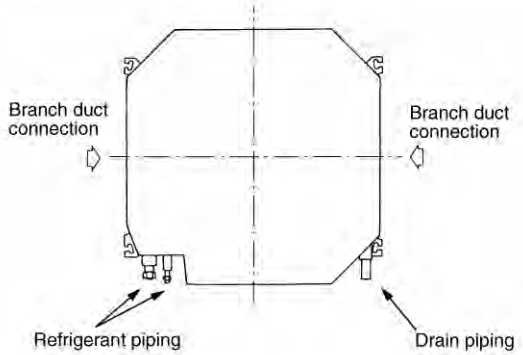

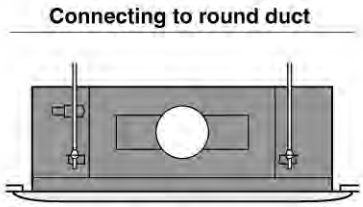

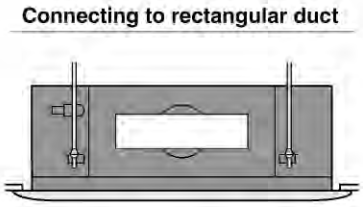

Branch duct air flow rate/static pressure characteristics

PLA-RP35AA

4-way air flow (horizontal vane) Rectangular duct

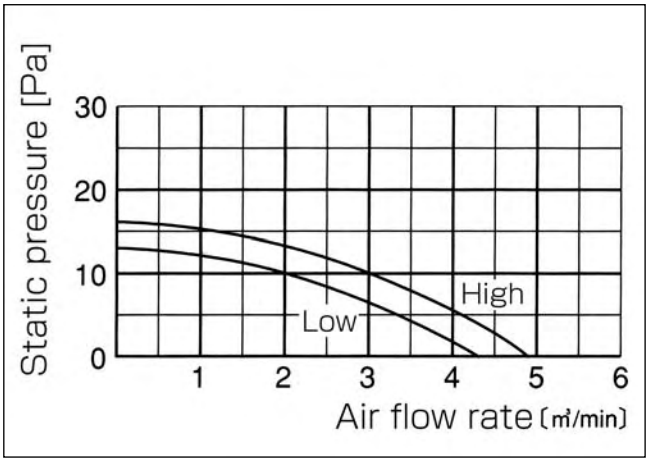

4-way air flow (horizontal vane) Round duct

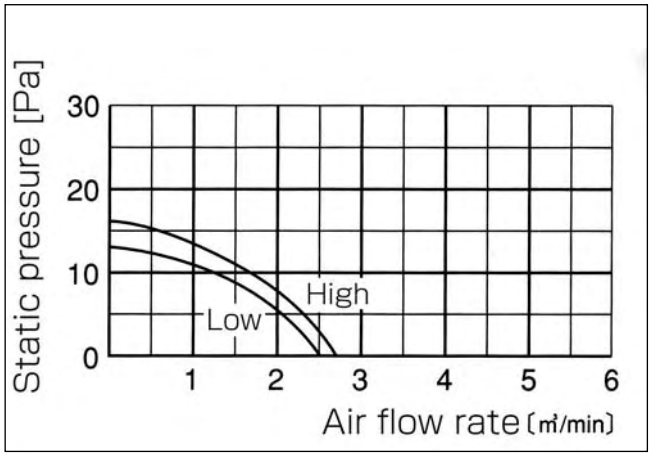

3-way air flow (horizontal vane) Rectangular duct

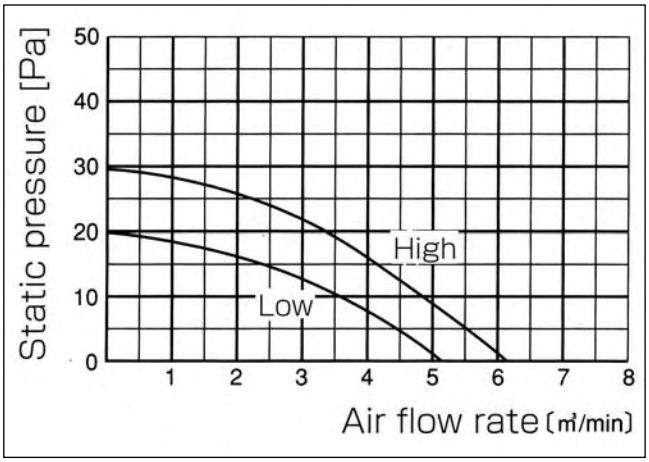

3-way air flow (horizontal vane) Round duct

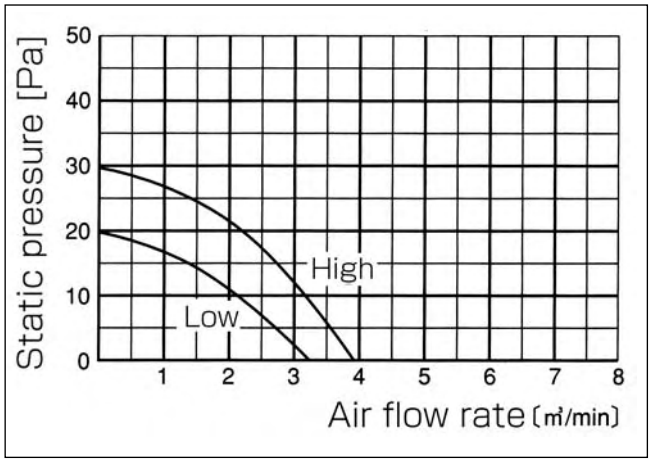

2-way air flow (horizontal vane) Rectangular duct

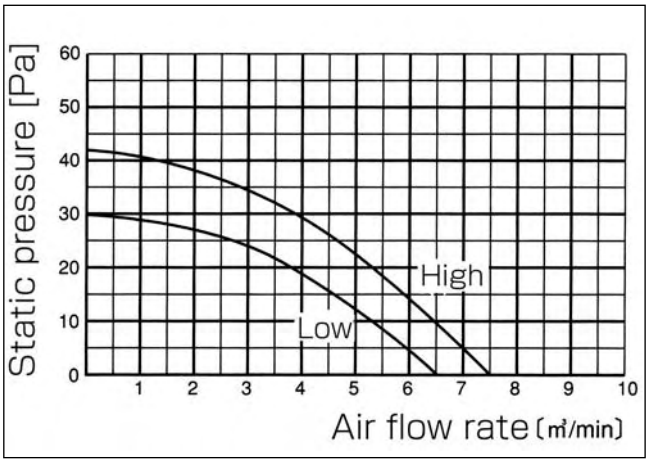

2-way air flow (horizontal vane) Round duct

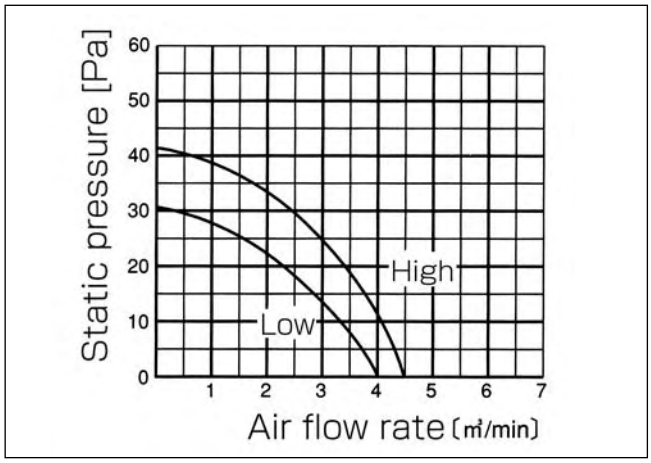

PLA-RP50AA
PLA-RP60AA

4-way air flow (horizontal vane) Rectangular duct

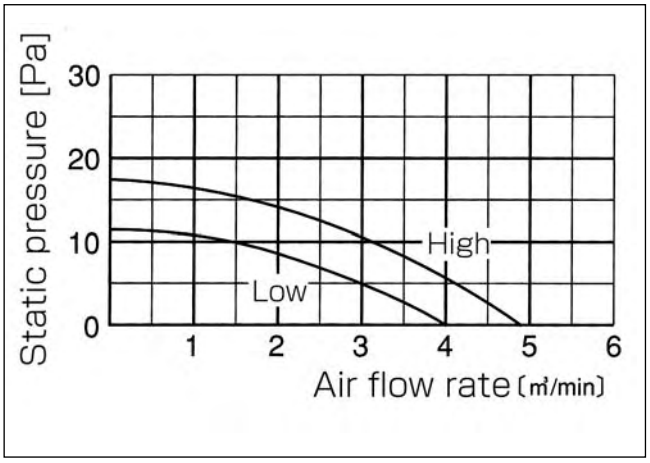

4-way air flow (horizontal vane) Round duct

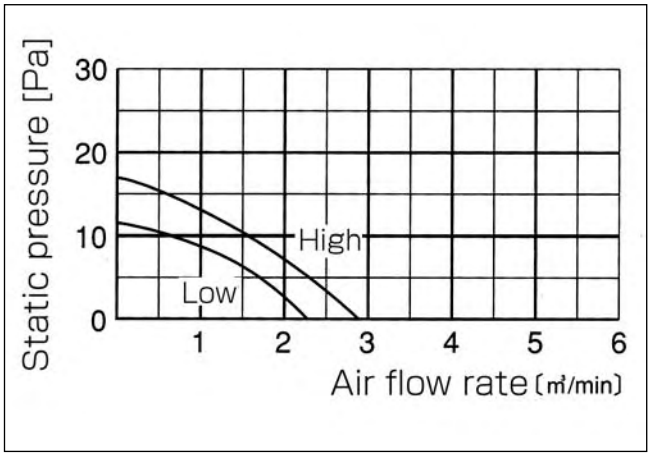

3-way air flow (horizontal vane) Rectangular duct

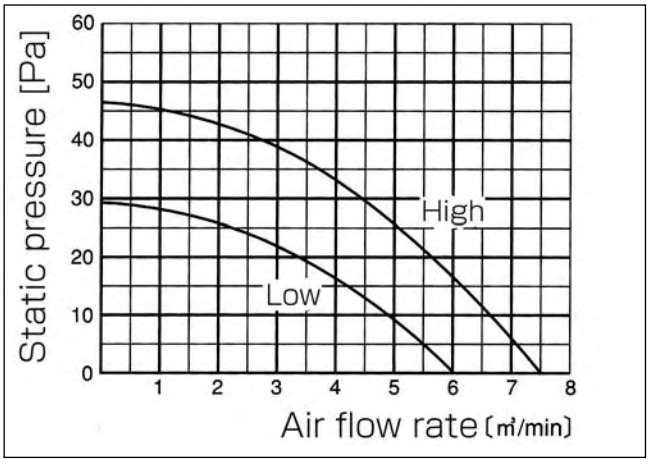

3-way air flow (horizontal vane) Round duct

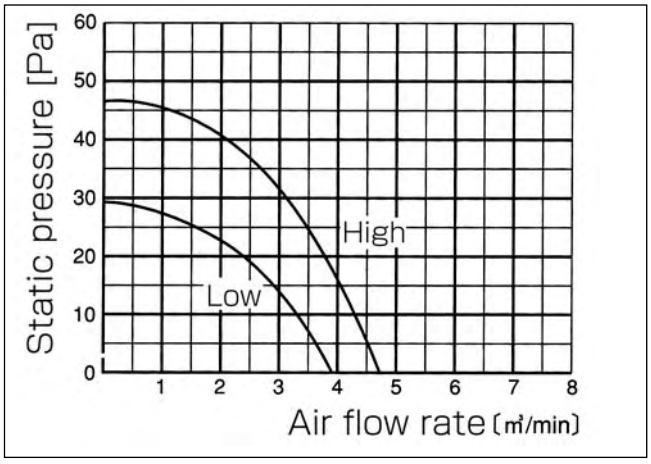

2-way air flow (horizontal vane) Rectangular duct

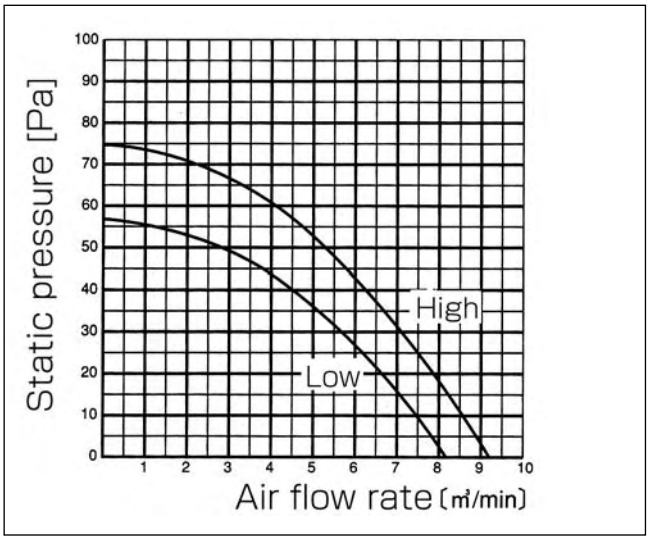

2-way air flow (horizontal vane) Round duct

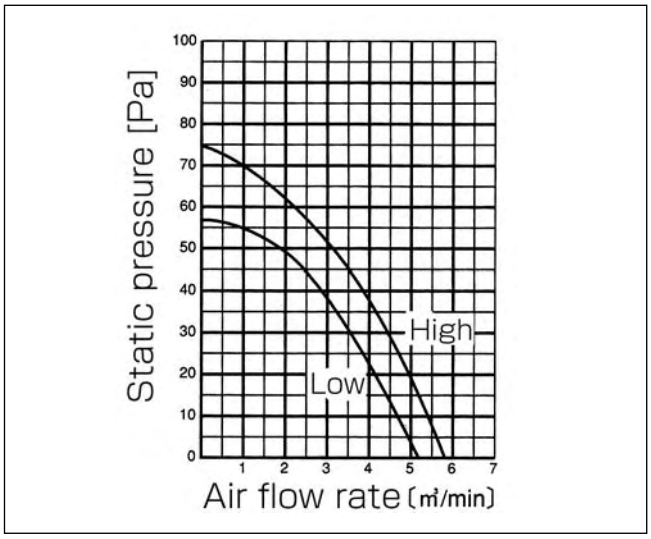

PLA-RP71AA

4-way air flow (horizontal vane) Rectangular duct

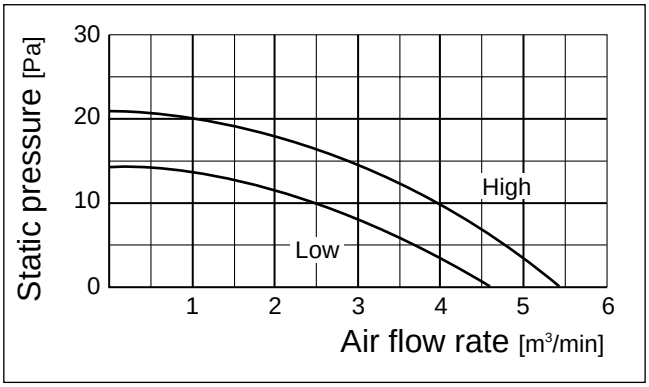

4-way air flow (horizontal vane) Round duct

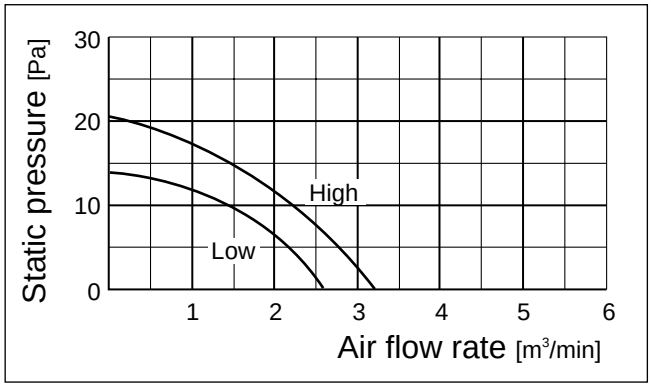

3-way air flow (horizontal vane) Rectangular duct

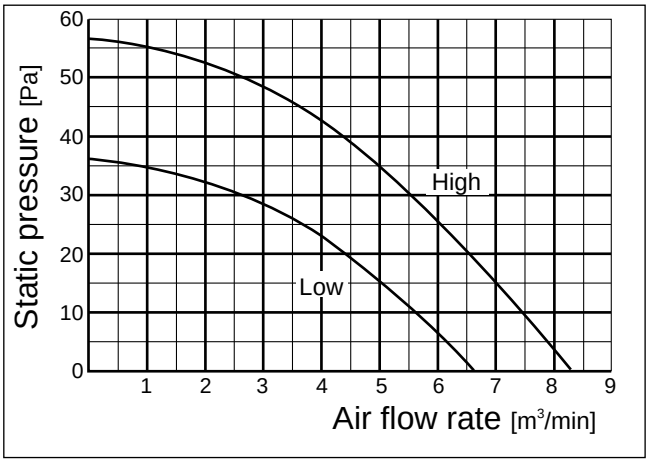

3-way air flow (horizontal vane) Round duct

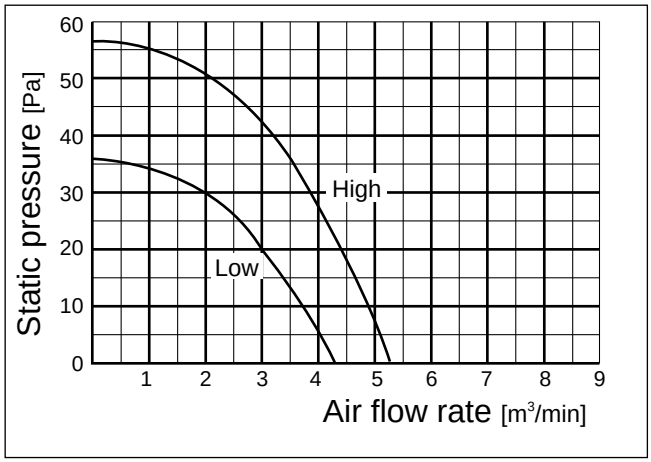

2-way air flow (horizontal vane) Rectangular duct

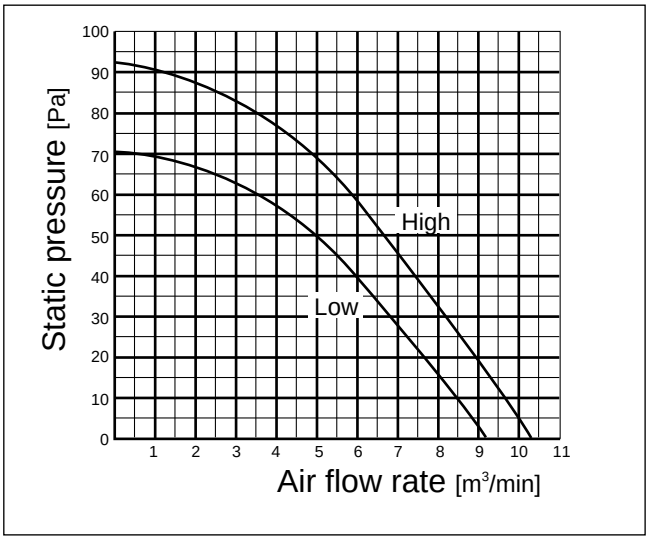

2-way air flow (horizontal vane) Round duct

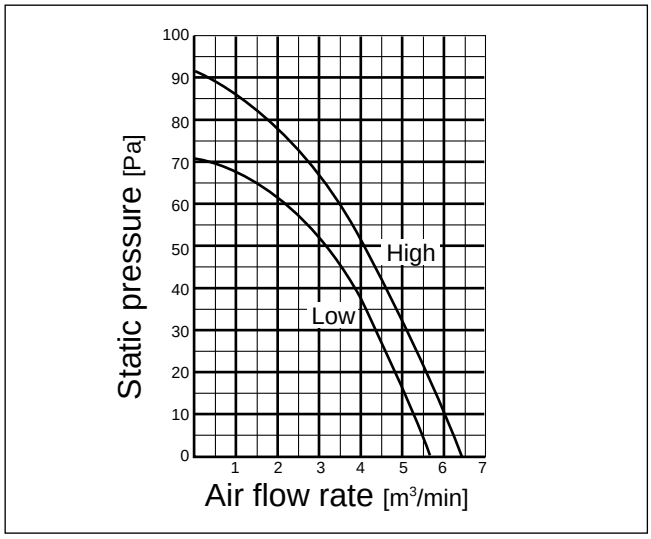

PLA-RP100AA

4-way air flow (horizontal vane) Rectangular duct

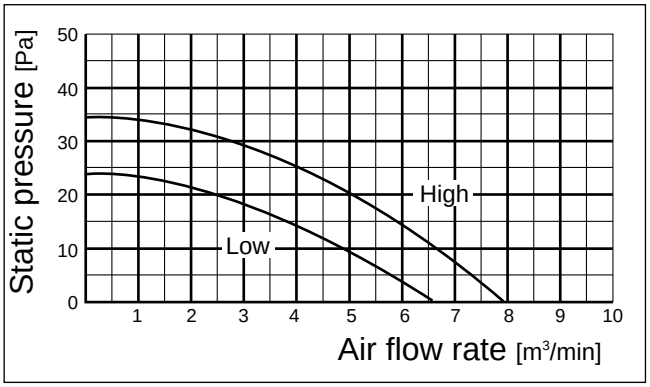

4-way air flow (horizontal vane) Round duct

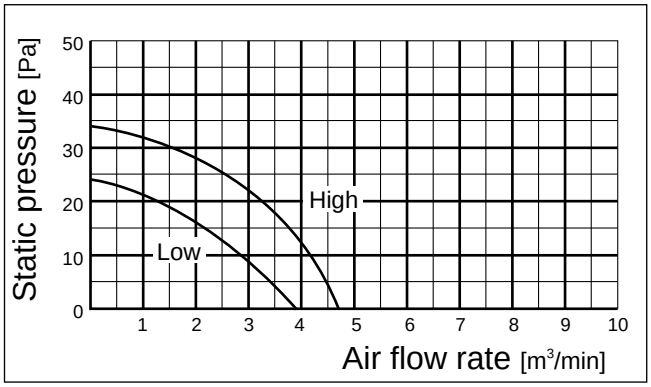

3-way air flow (horizontal vane) Rectangular duct

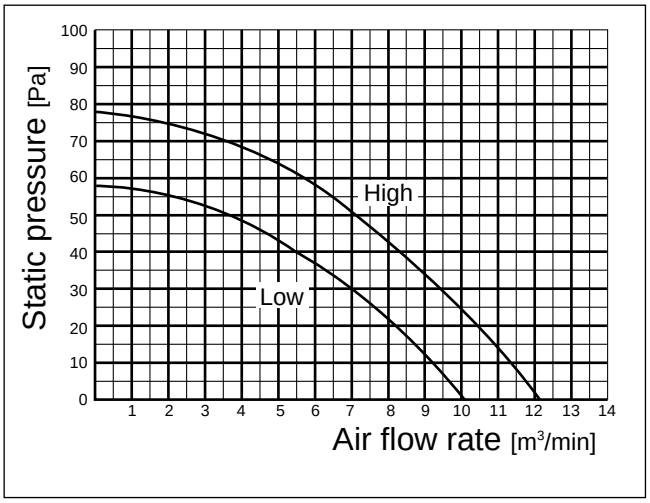

3-way air flow (horizontal vane) Round duct

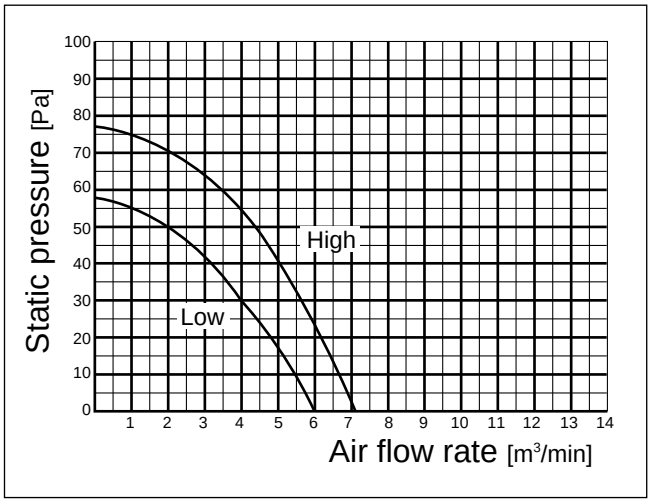

2-way air flow (horizontal vane) Rectangular duct

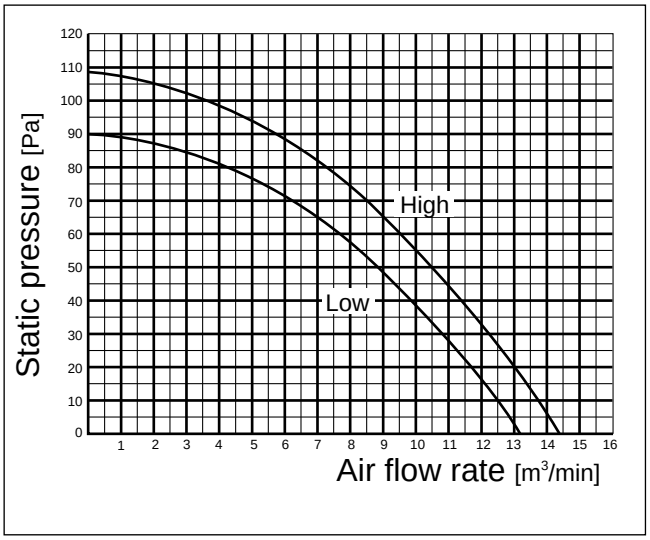

2-way air flow (horizontal vane) Round duct

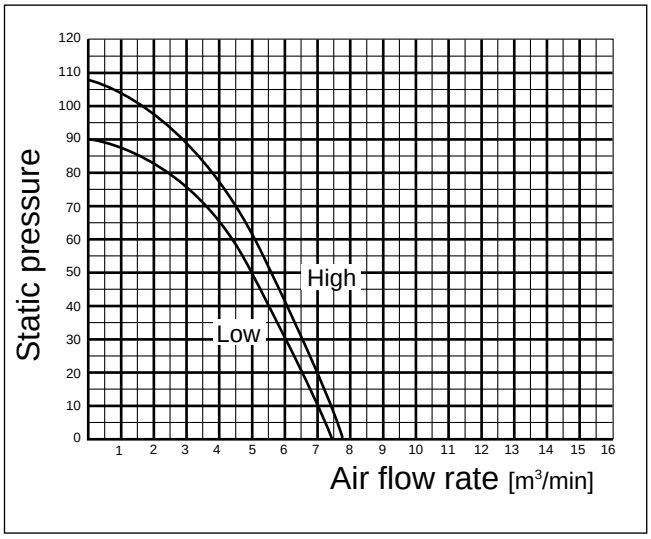

PLA-RP125AA
PLA-RP140AA

4-way air flow (horizontal vane) Rectangular duct

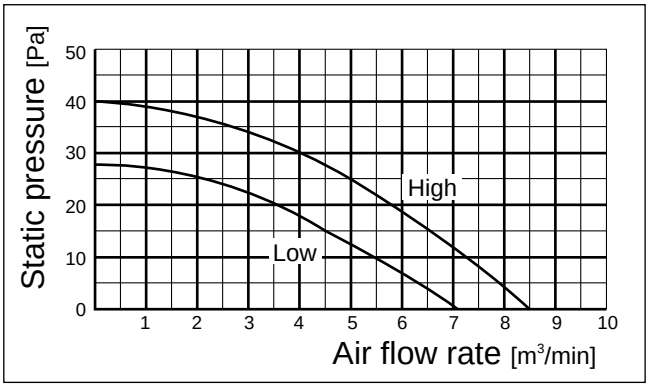

4-way air flow (horizontal vane) Round duct

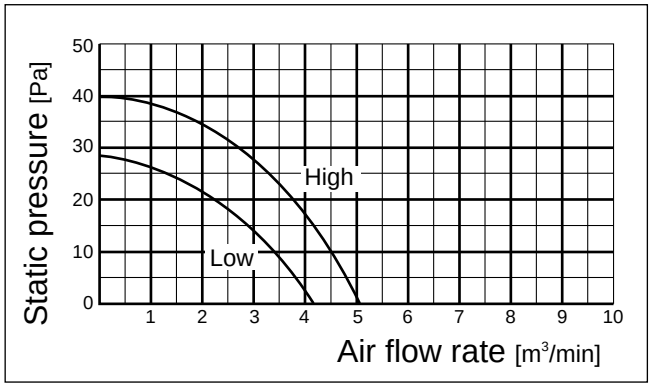

3-way air flow (horizontal vane) Rectangular duct

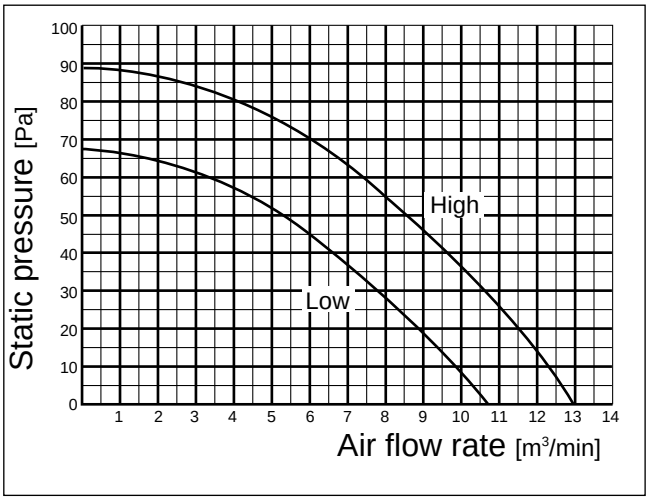

3-way air flow (horizontal vane) Round duct

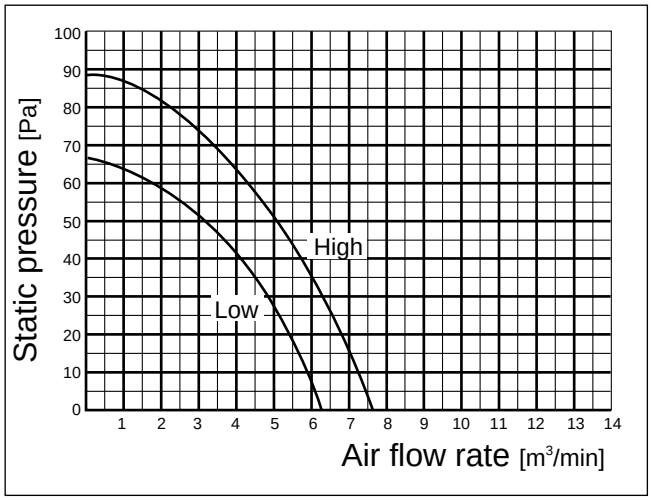

2-way air flow (horizontal vane) Rectangular duct

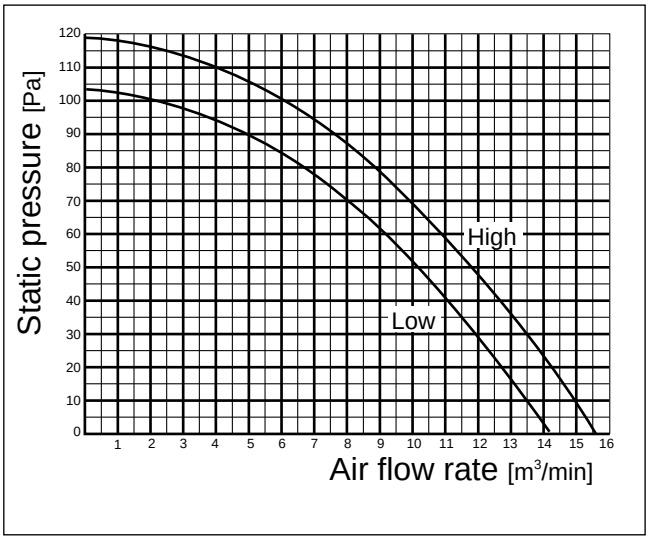

2-way air flow (horizontal vane) Round duct

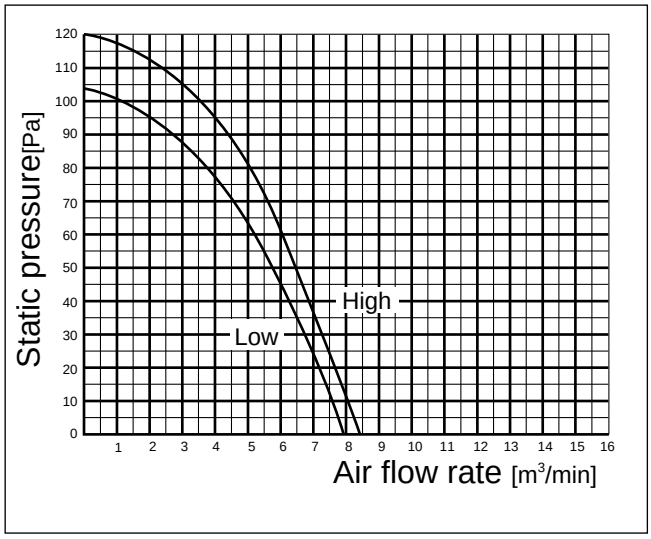

9-2. PEAD-RP·EA, GA

9-2-1. FAN PERFORMANCE AND CORRECTED AIR FLOW

PEAD-RP35EA

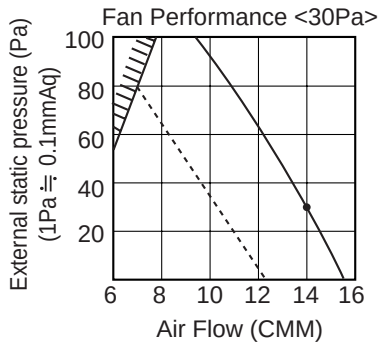

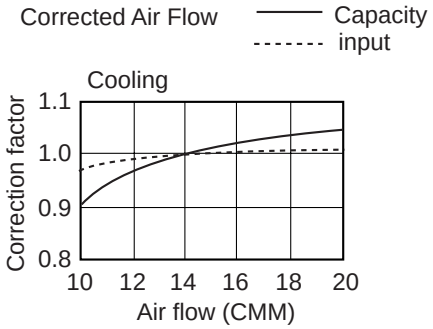

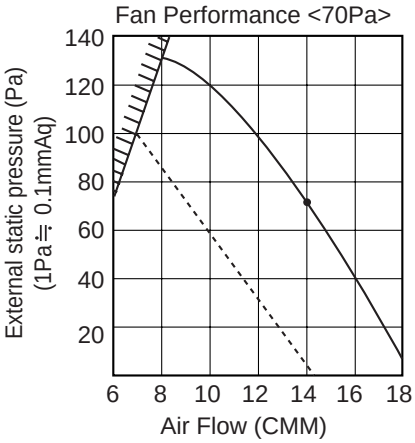

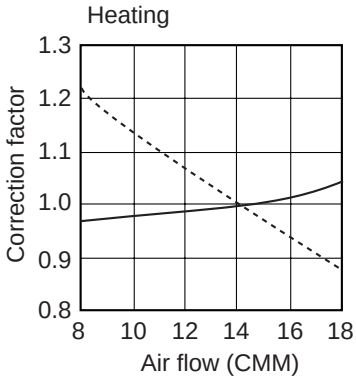

PEAD-RP50EA

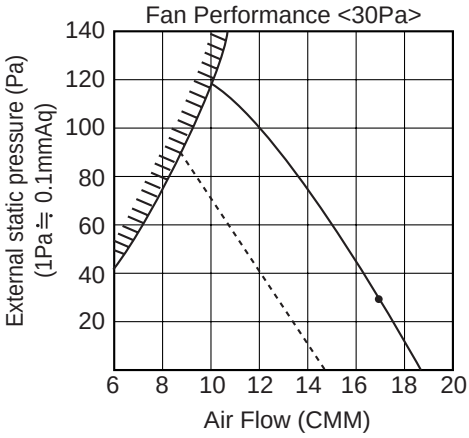

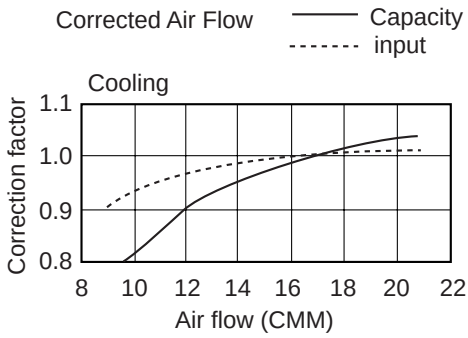

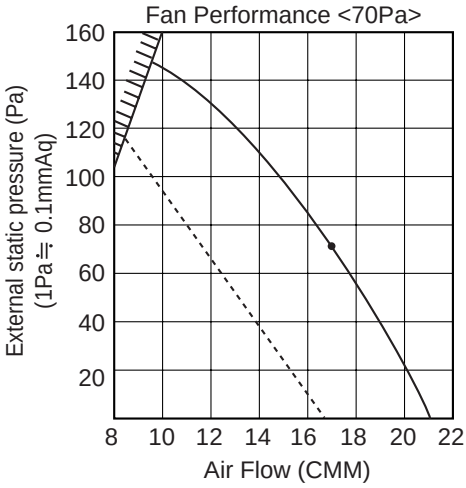

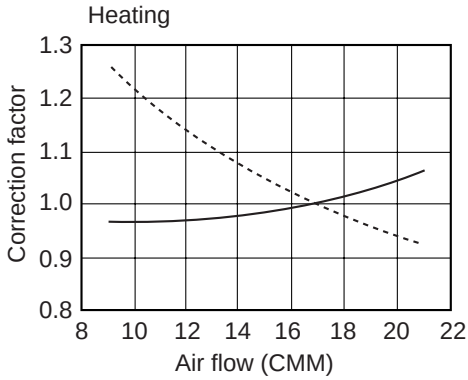

PEAD-RP60EA

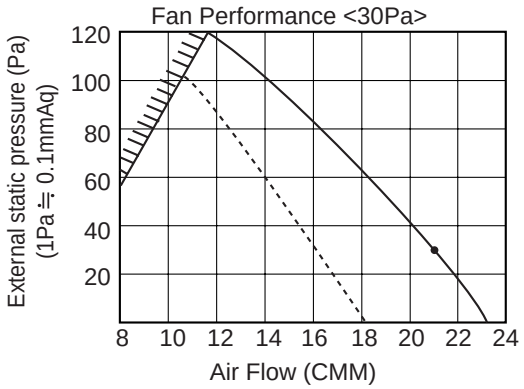

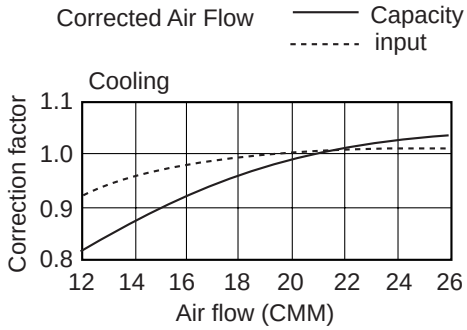

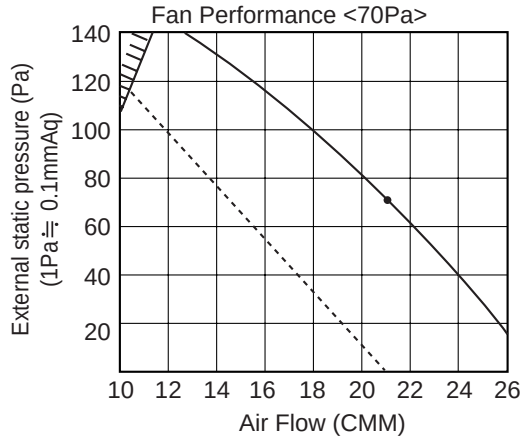

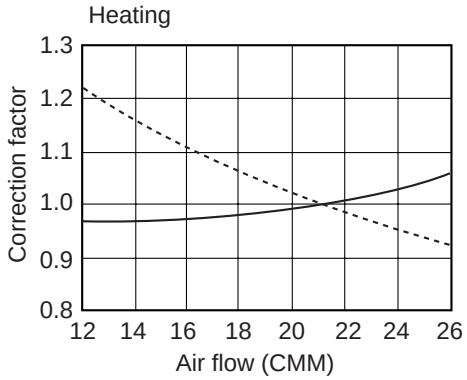

PEAD-RP71EA

Fan performance <130Pa>

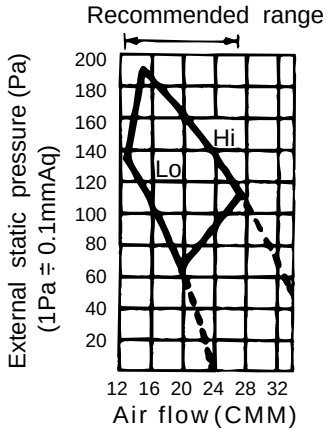

Fan performance <70Pa>

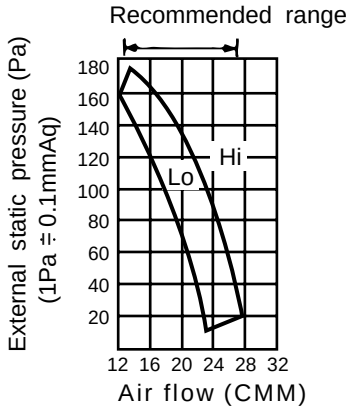

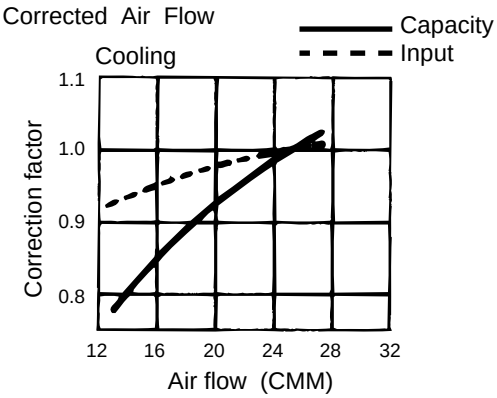

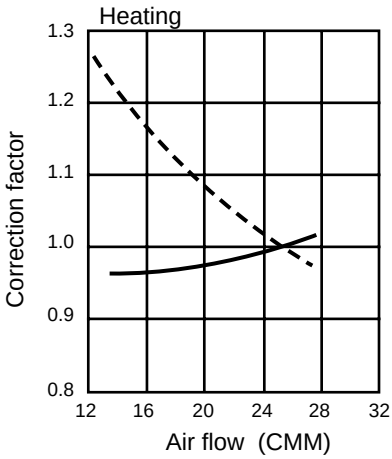

PEAD-RP100EA

Fan performance <130Pa>

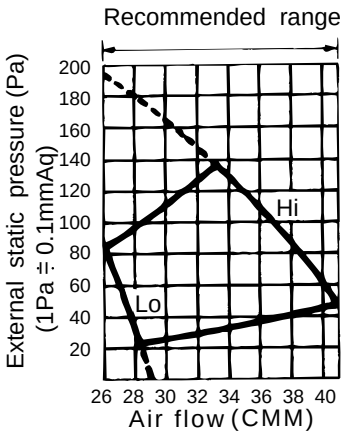

Fan performance <70Pa>

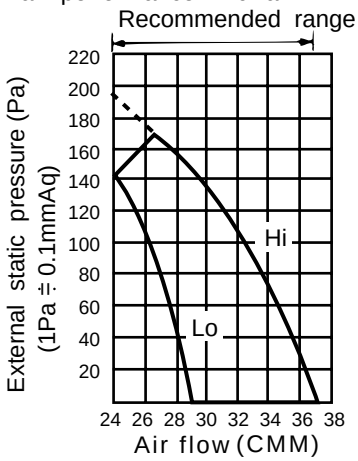

Corrected Air Flow

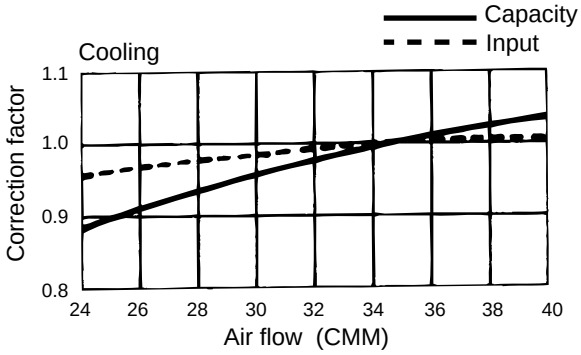

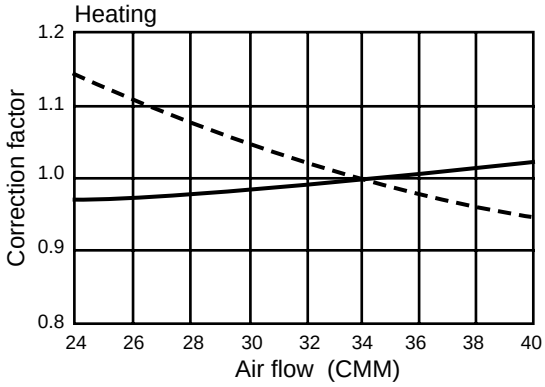

PEAD-RP125EA

Fan performance <130Pa>

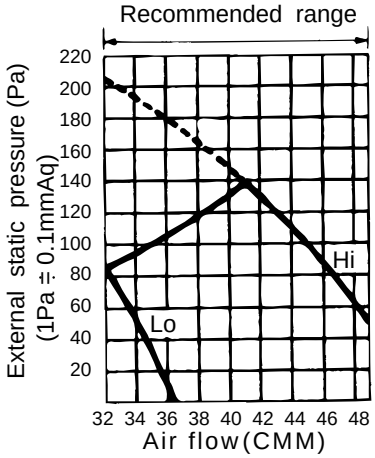

Fan performance <70Pa>

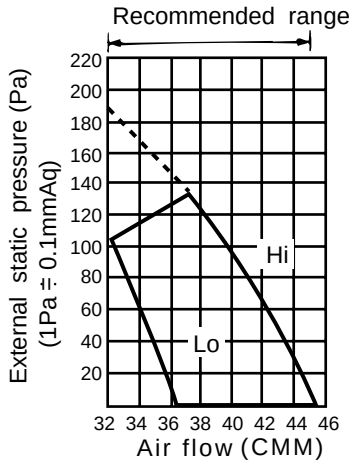

Corrected Air Flow

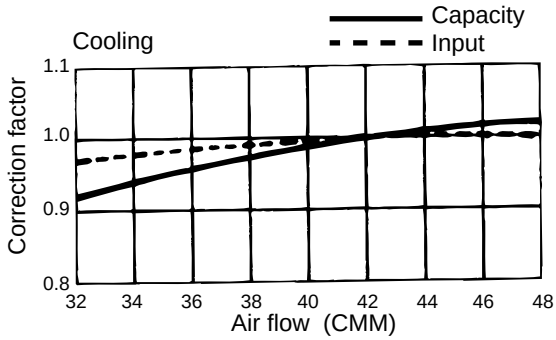

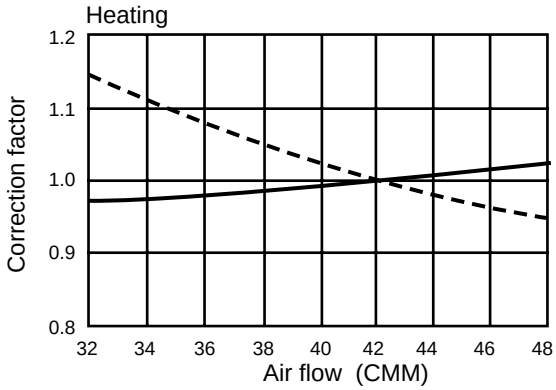

PEAD-RP140EA

Fan performance <130Pa>

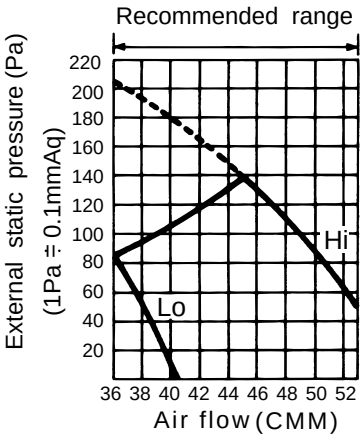

Fan performance <70Pa>

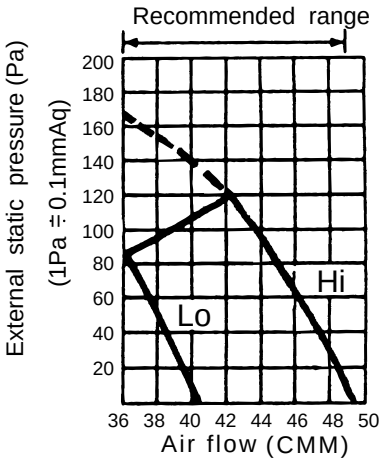

Corrected Air Flow

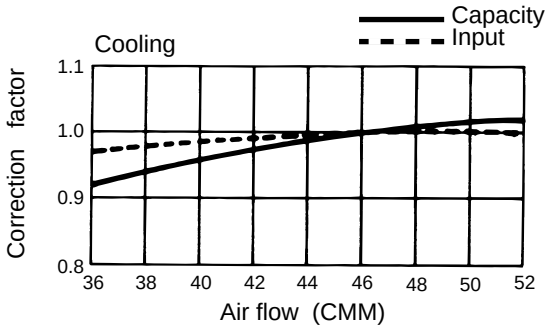

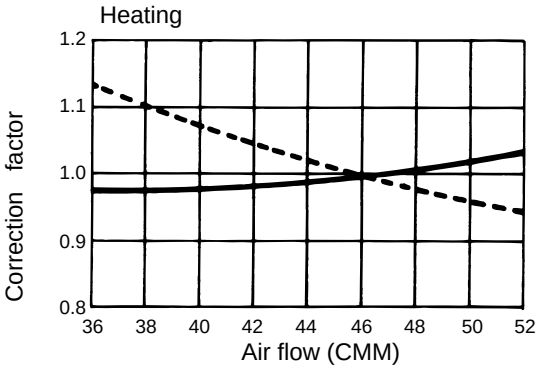

PEAD-RP60GA

Fan performance <220V>

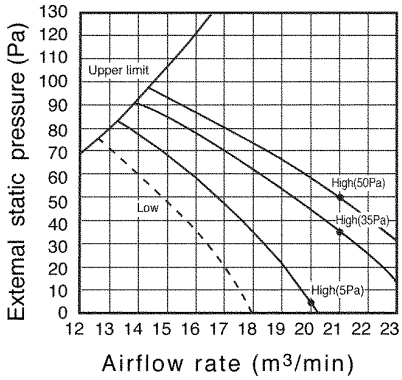

Fan performance <230V>

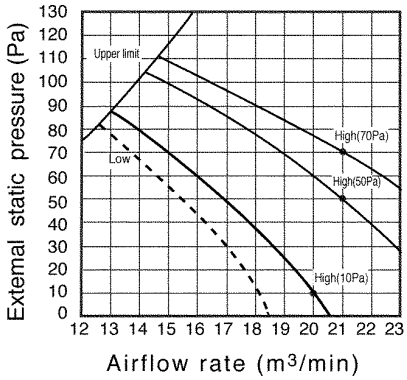

Fan performance <240V>

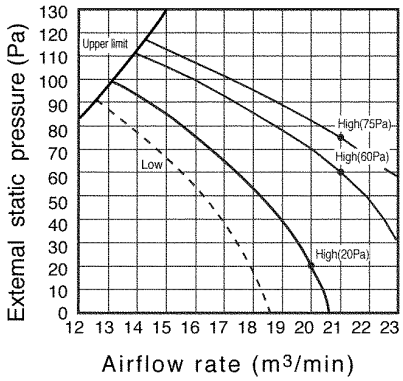

Corrected air flow

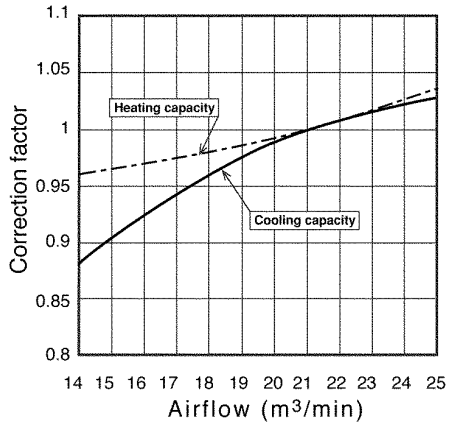

PEAD-RP71GA

Fan performance <220V>

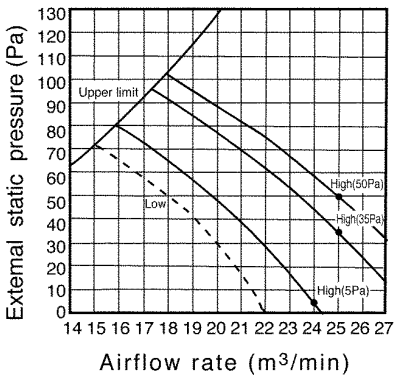

Fan performance <230V>

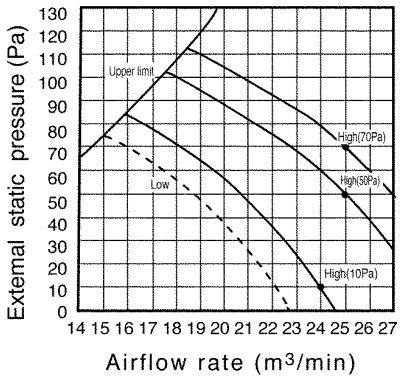

Fan performance <240V>

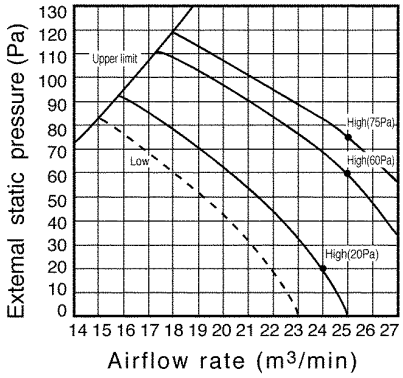

Corrected air flow

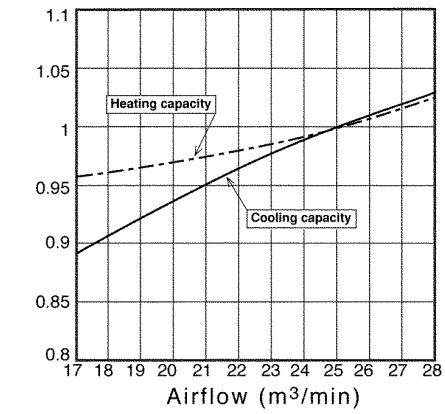

PEAD-RP100GA

Fan performance <220V>

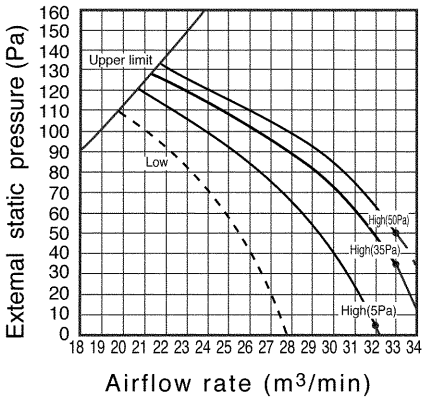

Fan performance <230V>

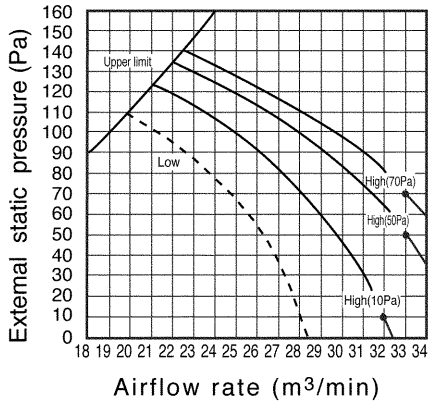

Fan performance <240V>

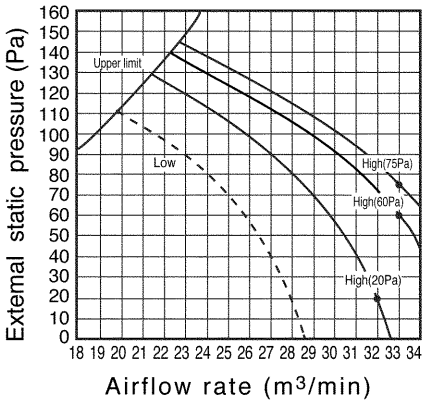

Corrected air flow

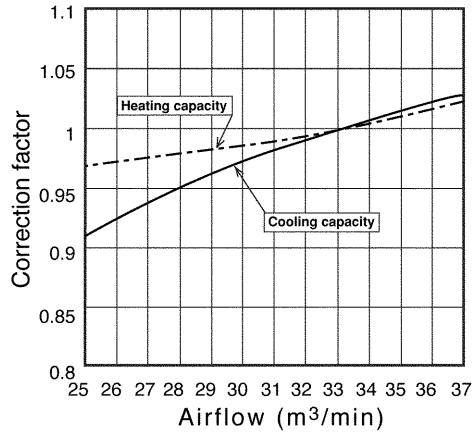

9-3.PEA-RP·EA

FAN PERFORMANCE AND CORRECTED AIR FLOW

(1) PEA-RP71EA

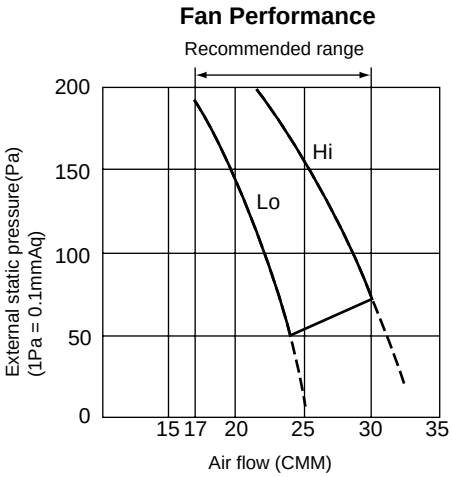

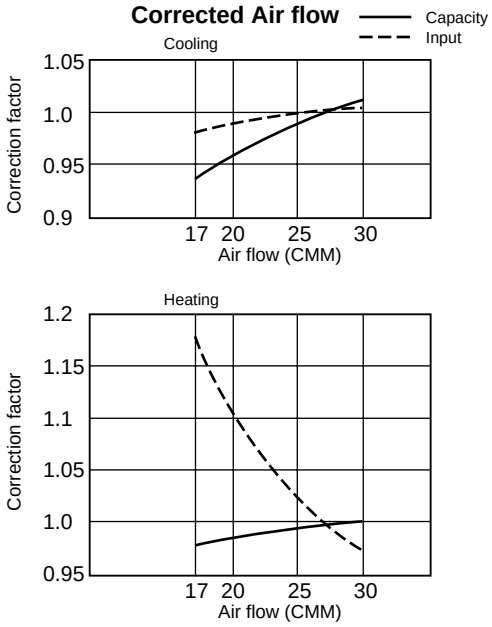

(2) PEA-RP100EA

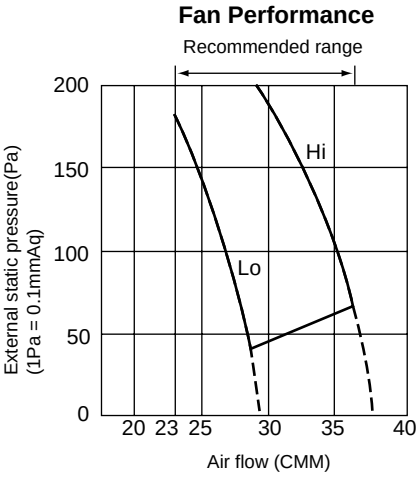

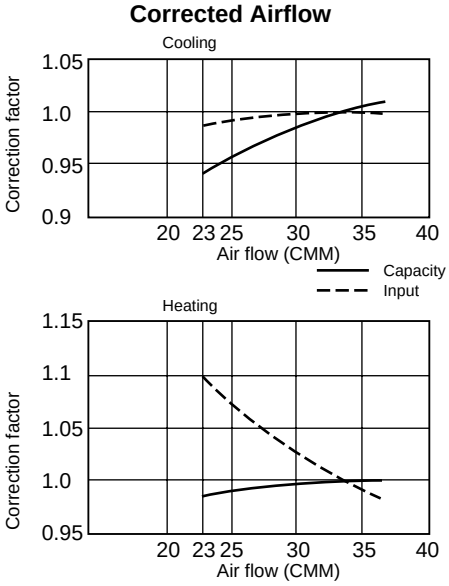

From the previous page.

(3) PEA-RP125EA

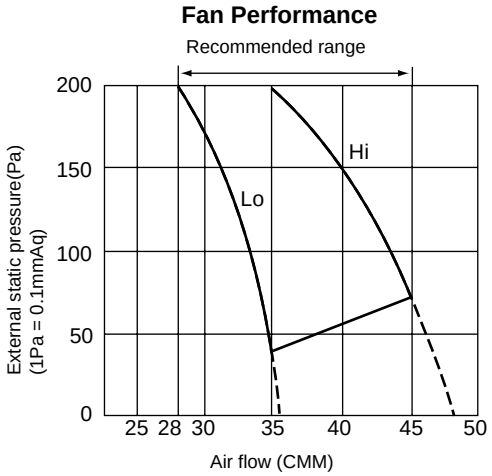

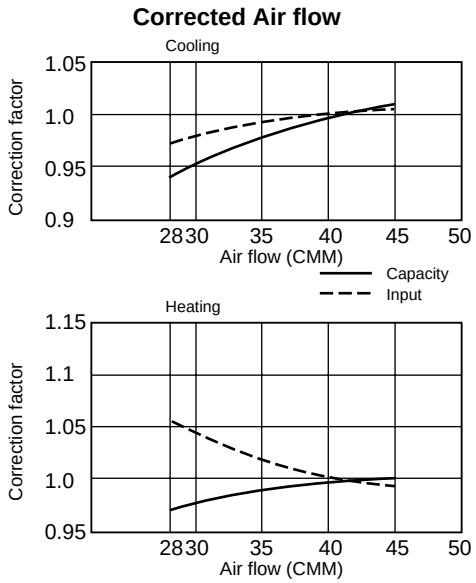

(4) PEA-RP140EA

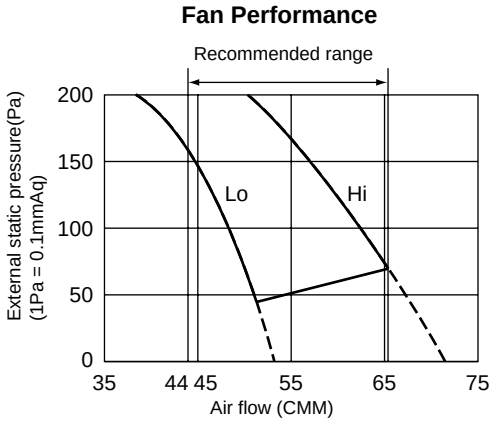

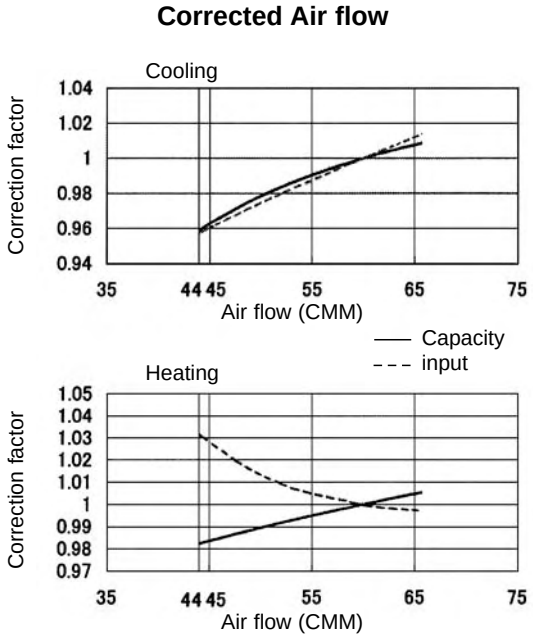

9-4.PEH-RP·MYA

[1] Capacity/Input Ratio against Changes in Room Airflow Rate

•Model PEH-RP200MYA

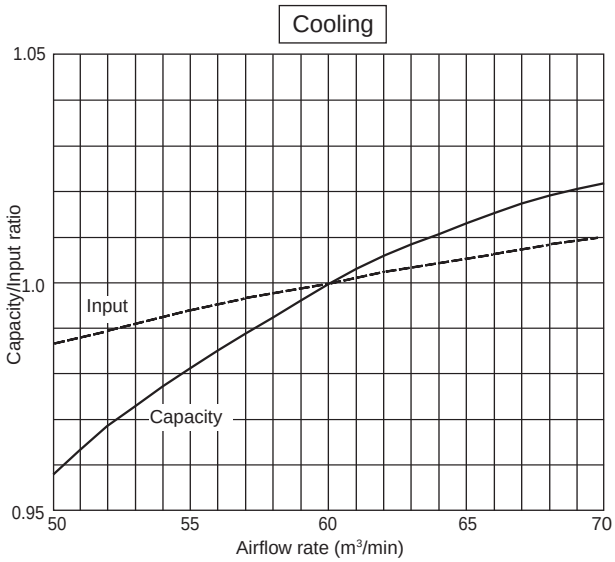

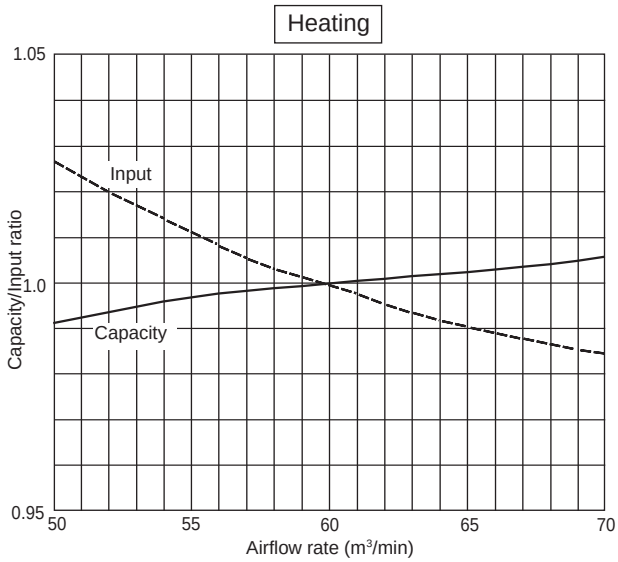

•Model PEH-RP250MYA

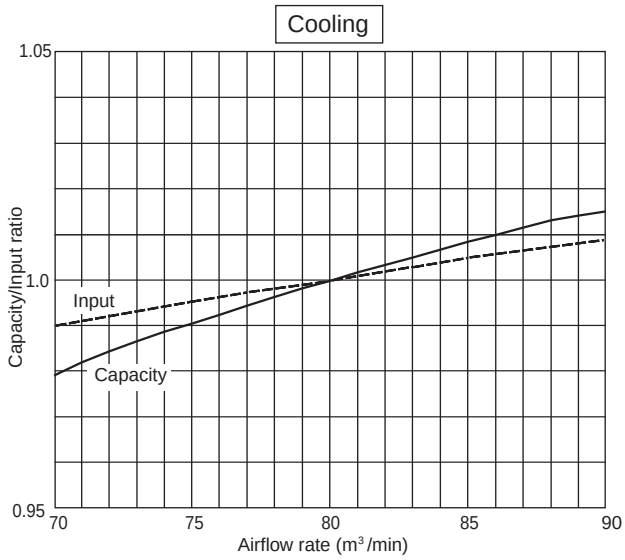

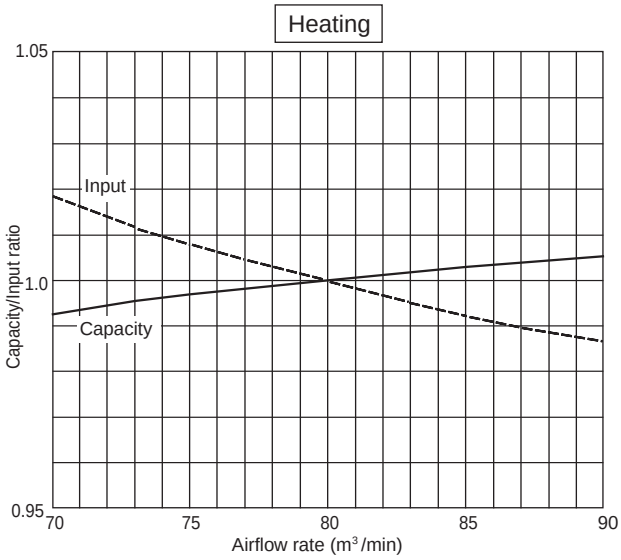

[2] Airflow Characteristic Curves

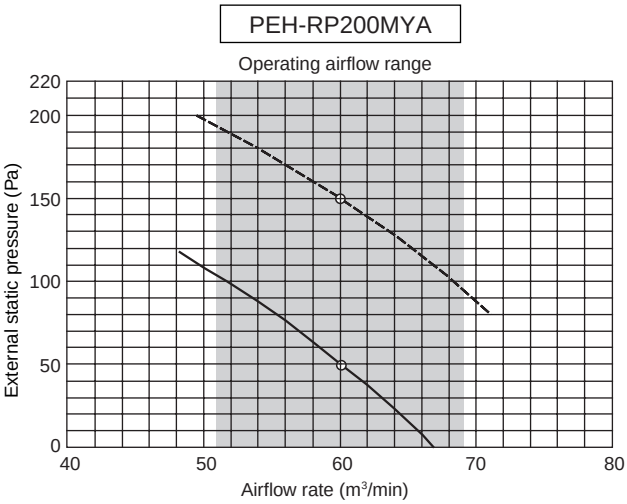

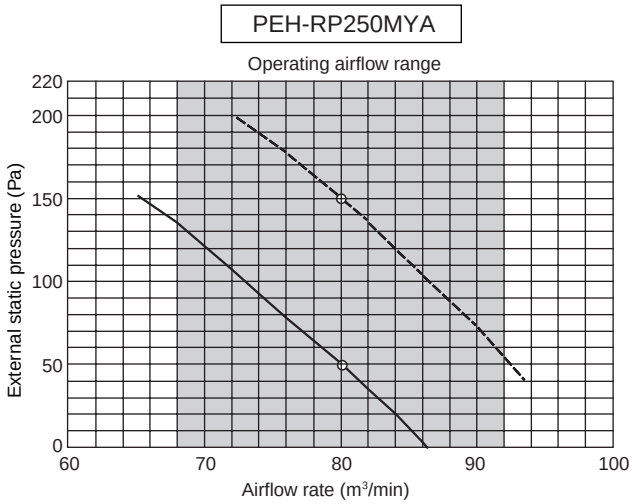

10 NOISE CRITERION CURVES

PLA-RP35AA

NOTCH	SPL(dB)	LINE
High	31	
Medium1	29	
Medium2	28	
Low	27	

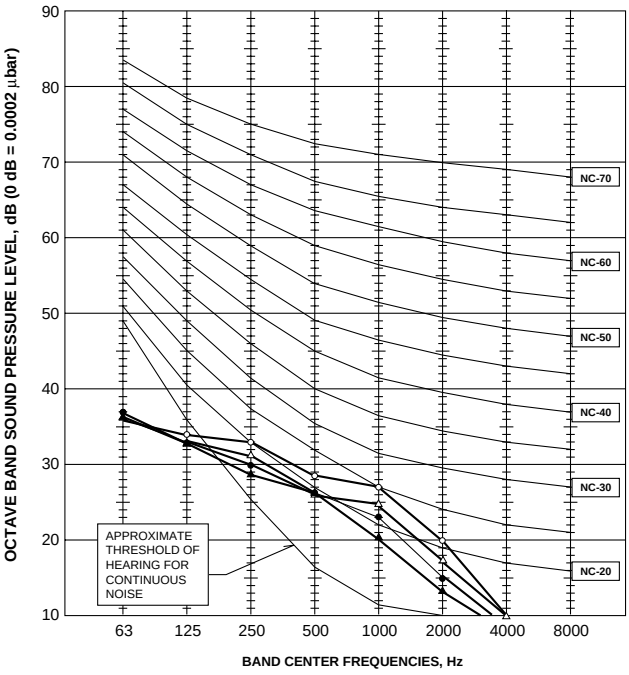

PLA-RP50AA
PLA-RP60AA

NOTCH	SPL(dB)	LINE
High	33	
Medium1	31	
Medium2	29	
Low	28	

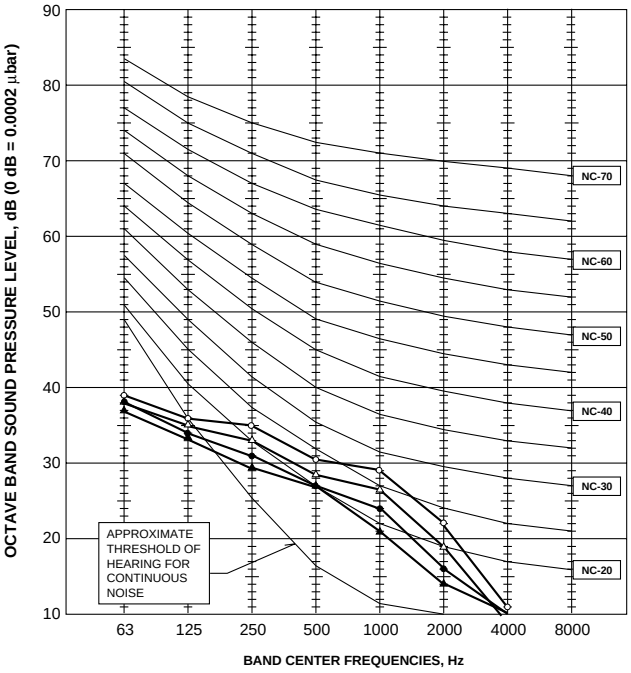

PLA-RP71AA

NOTCH	SPL(dB)	LINE
High	34	
Medium1	32	
Medium2	30	
Low	28	

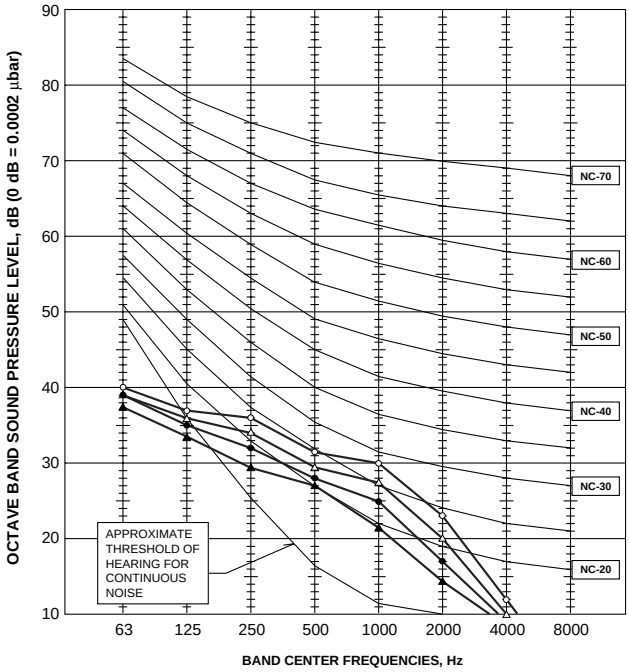

PLA-RP100AA

NOTCH	SPL(dB)	LINE
High	41	
Medium1	39	
Medium2	36	
Low	33	

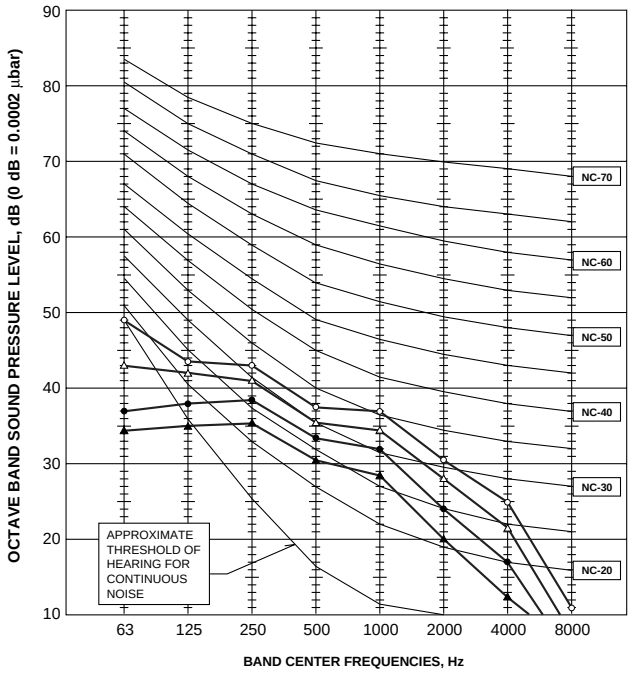

PLA-RP125AA

NOTCH	SPL(dB)	LINE
High	45	
Medium1	43	
Medium2	40	
Low	37	

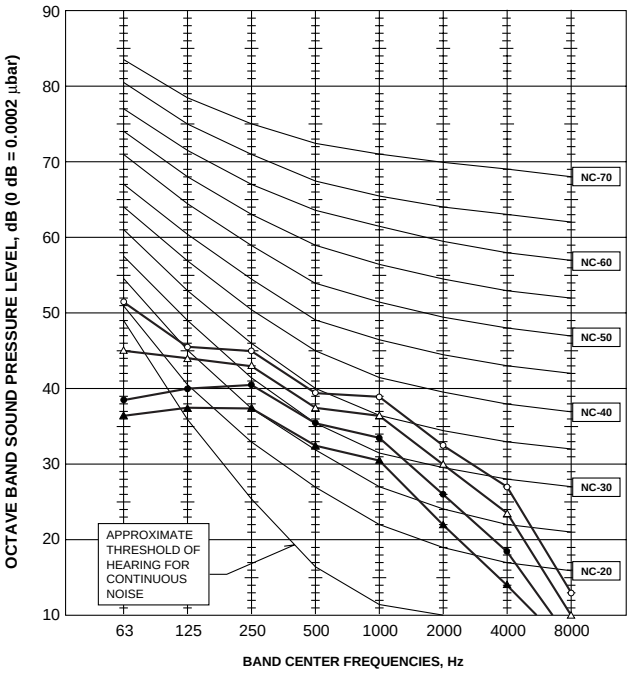

PLA-RP140AA

NOTCH	SPL(dB)	LINE
High	45	
Medium1	43	
Medium2	40	
Low	37	

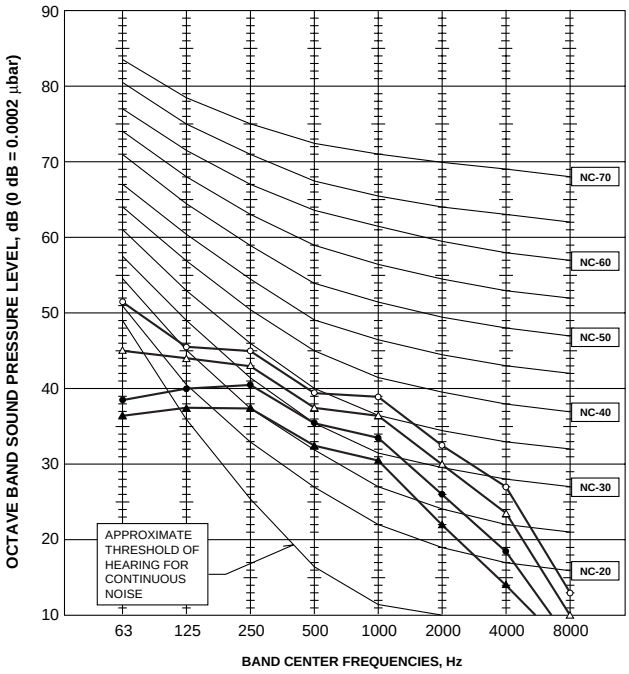

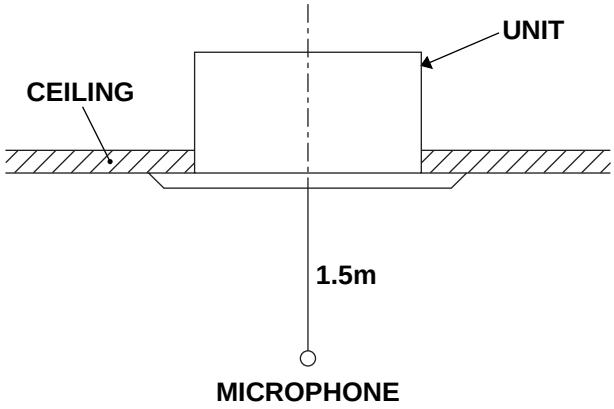

Ceiling concealed

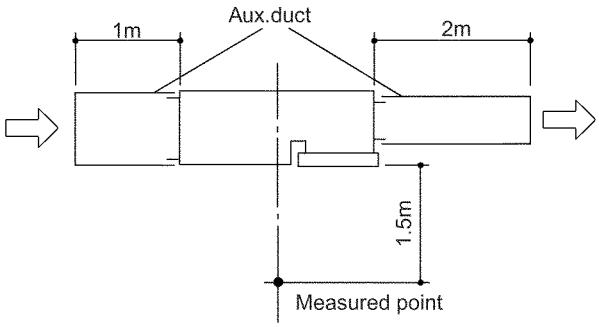

Noise level at anechoic room (Low-High) Unit : dB(A)

Model	External static pressure		
	30Pa	70Pa	130Pa
PEAD-RP35EA	34-38	36-43	-
PEAD-RP50EA	36-40	38-44	-
PEAD-RP60EA	37-41	39-46	-
PEAD-RP71EA	-	37-41	40-45 ✻
PEAD-RP100EA	-	41-46	42-48 ✻
PEAD-RP125EA	-	44-50	46-52 ✻
PEAD-RP140EA	-	46-51	47-53 ✻

✻ Optional motor

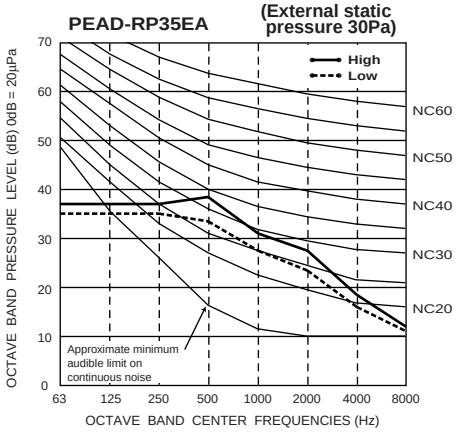

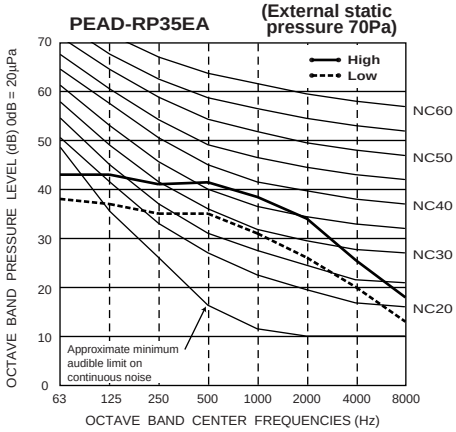

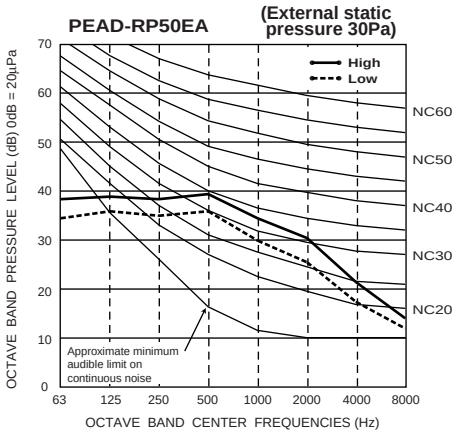

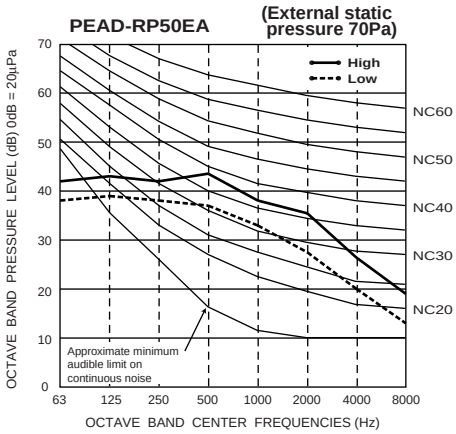

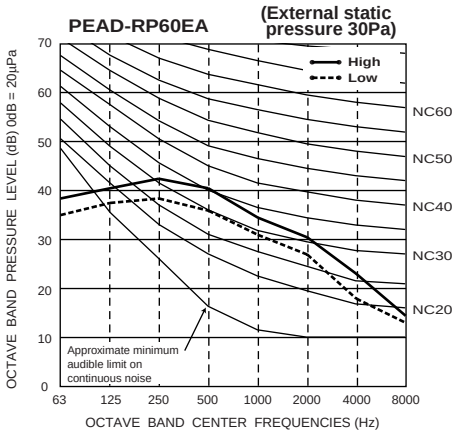

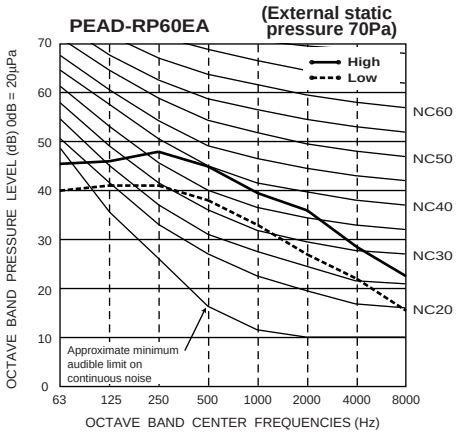

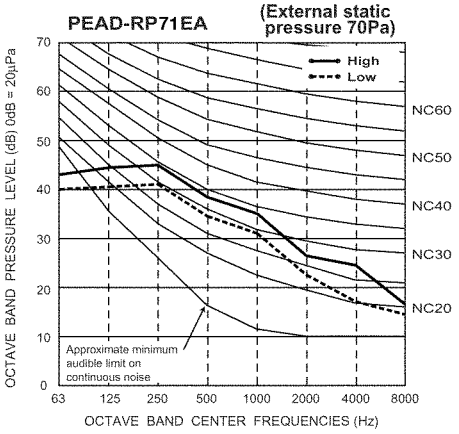
PEAD-RP71EA
(External static pressure 70Pa)
High
Low
NC60
NC50
NC40
NC30
NC20
Approximate minimum audible limit on continuous noise
OCTAVE BAND PRESSURE LEVEL (dB) 0dB = 20μPa
OCTAVE BAND CENTER FREQUENCIES (Hz)

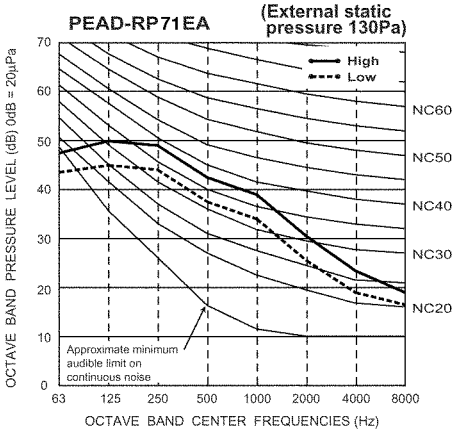
PEAD-RP71EA
(External static pressure 130Pa)
High
Low
NC60
NC50
NC40
NC30
NC20
Approximate minimum audible limit on continuous noise
OCTAVE BAND PRESSURE LEVEL (dB) 0dB = 20μPa
OCTAVE BAND CENTER FREQUENCIES (Hz)

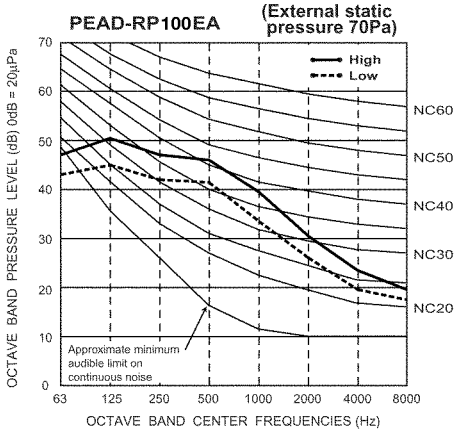
PEAD-RP100EA
(External static pressure 70Pa)
High
Low
NC60
NC50
NC40
NC30
NC20
Approximate minimum audible limit on continuous noise
OCTAVE BAND PRESSURE LEVEL (dB) 0dB = 20μPa
OCTAVE BAND CENTER FREQUENCIES (Hz)

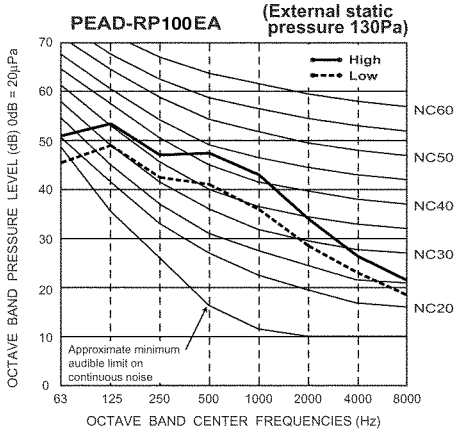
PEAD-RP100EA
(External static pressure 130Pa)
High
Low
NC60
NC50
NC40
NC30
NC20
Approximate minimum audible limit on continuous noise
OCTAVE BAND PRESSURE LEVEL (dB) 0dB = 20μPa
OCTAVE BAND CENTER FREQUENCIES (Hz)

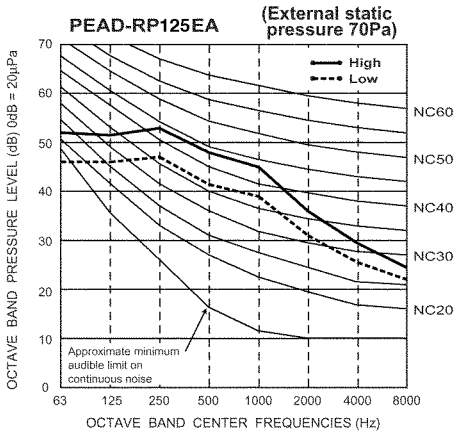
PEAD-RP125EA
(External static pressure 70Pa)
High
Low
NC60
NC50
NC40
NC30
NC20
Approximate minimum audible limit on continuous noise
OCTAVE BAND PRESSURE LEVEL (dB) 0dB = 20μPa
OCTAVE BAND CENTER FREQUENCIES (Hz)

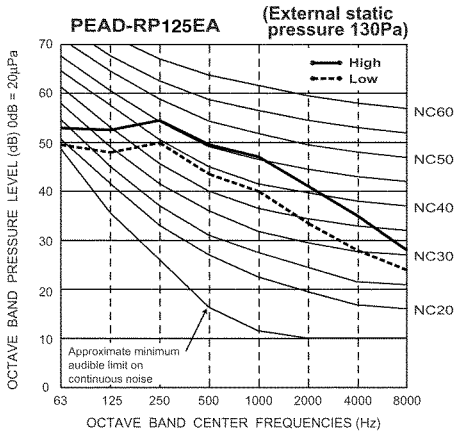
PEAD-RP125EA
(External static pressure 130Pa)
High
Low
NC60
NC50
NC40
NC30
NC20
Approximate minimum audible limit on continuous noise
OCTAVE BAND PRESSURE LEVEL (dB) 0dB = 20μPa
OCTAVE BAND CENTER FREQUENCIES (Hz)

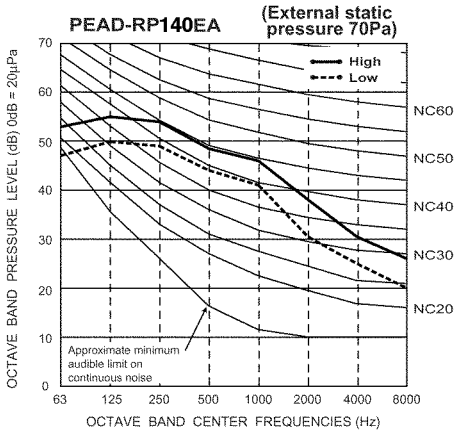
PEAD-RP140EA
(External static pressure 70Pa)
High
Low
NC60
NC50
NC40
NC30
NC20
Approximate minimum audible limit on continuous noise
OCTAVE BAND PRESSURE LEVEL (dB) 0dB = 20μPa
OCTAVE BAND CENTER FREQUENCIES (Hz)

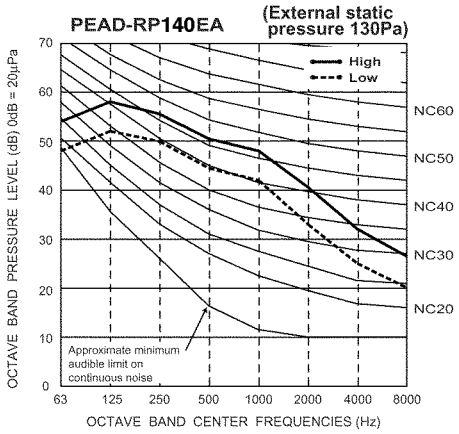
PEAD-RP140EA
(External static pressure 130Pa)
High
Low
NC60
NC50
NC40
NC30
NC20
Approximate minimum audible limit on continuous noise
OCTAVE BAND PRESSURE LEVEL (dB) 0dB = 20μPa
OCTAVE BAND CENTER FREQUENCIES (Hz)

PEA-RP71EA

NOTCH	SPL(dB)	LINE
High	55	○——○
Low	52	●——●

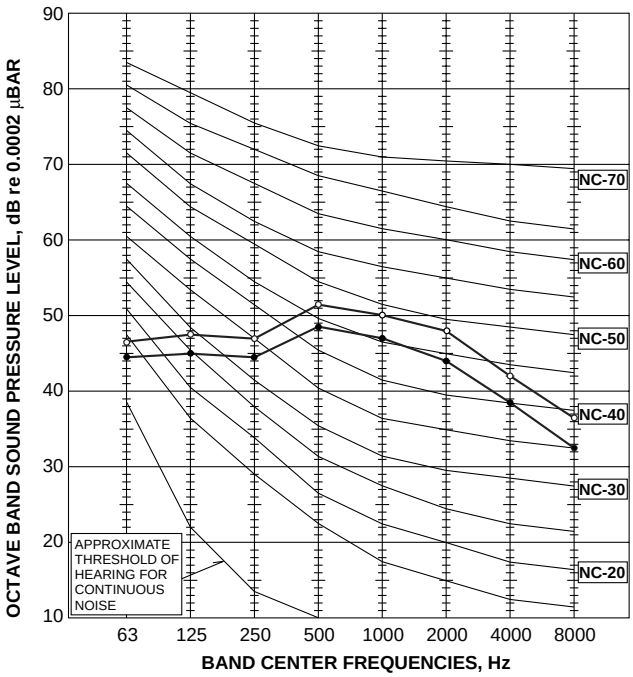

PEA-RP100EA

NOTCH	SPL(dB)	LINE
High	58	○——○
Low	54	●——●

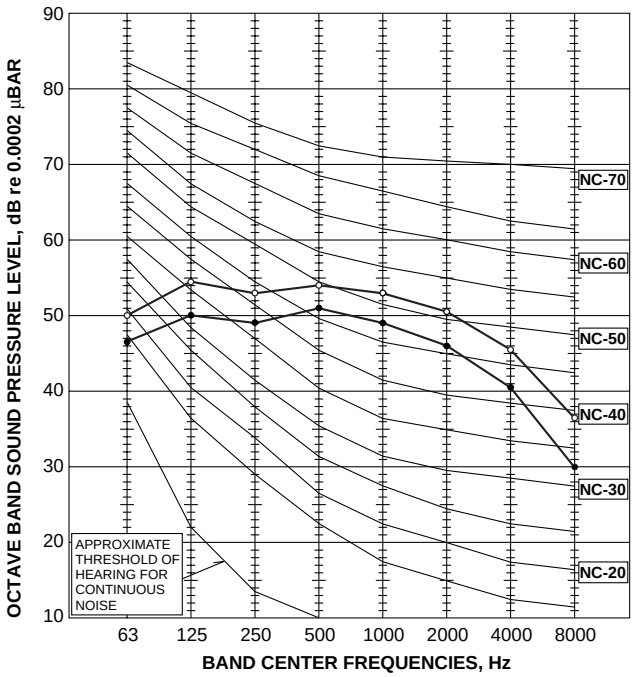

PEA-RP125EA

NOTCH	SPL(dB)	LINE
High	58	○——○
Low	54	●——●

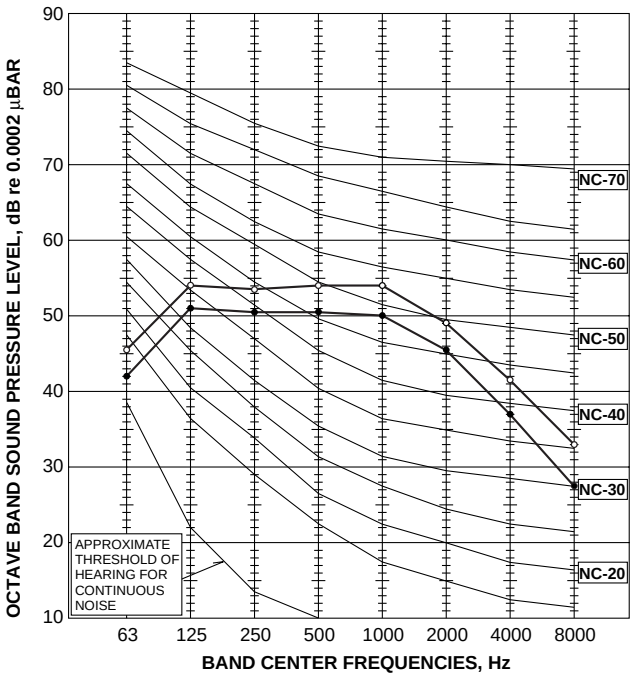

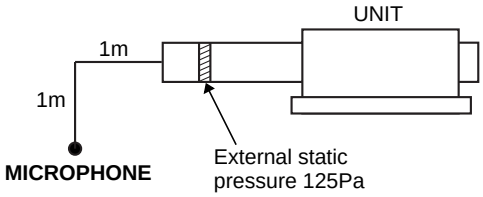

PEA-RP140EA

NOTCH	SPL(dB)	LINE
High	55	○——○
Low	51	●——●

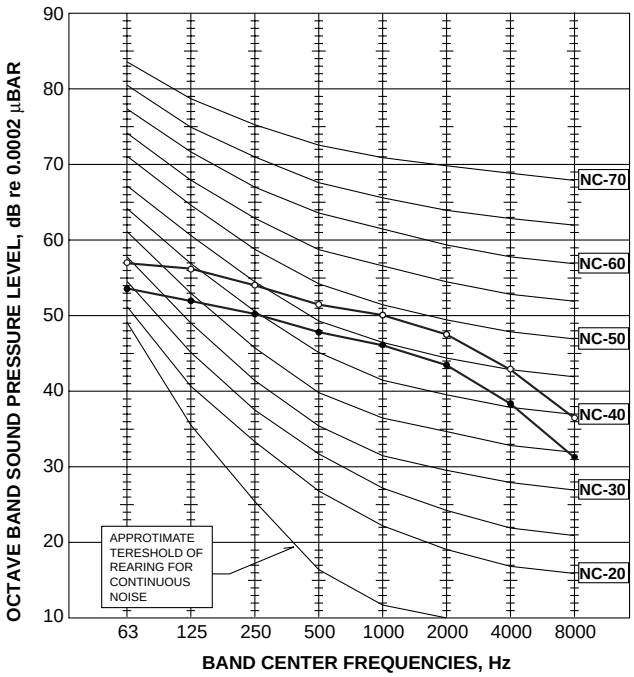

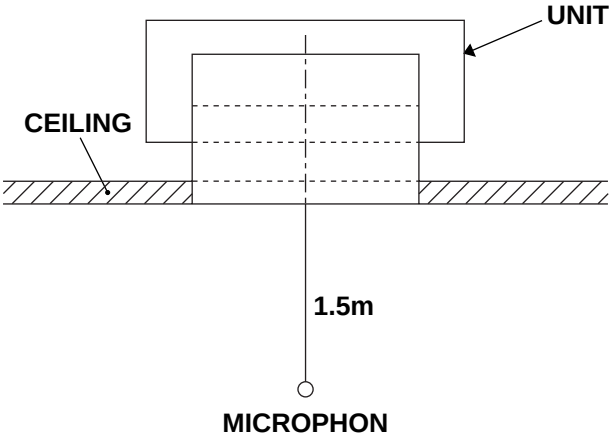

PEH-RP200MYA

Measurement condition

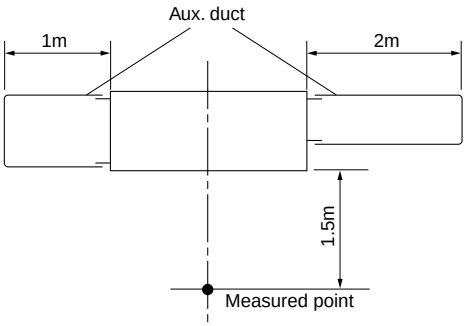

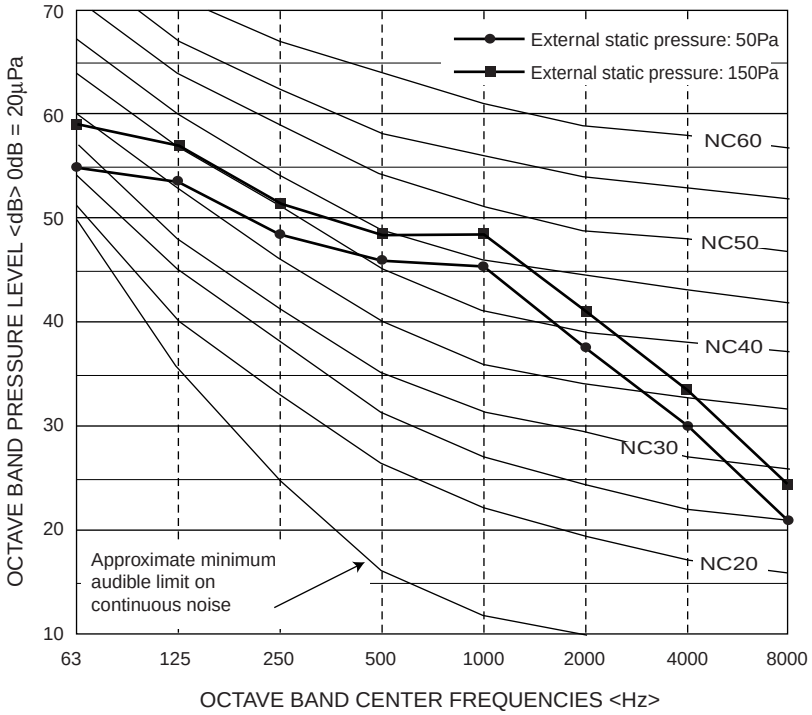

PEH-RP250MYA

Measurement condition

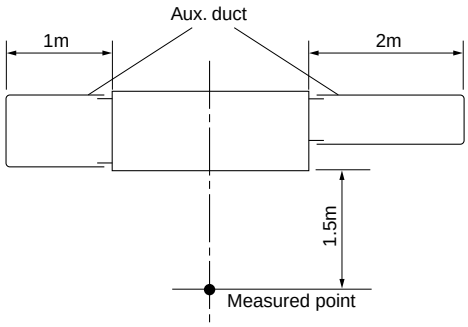

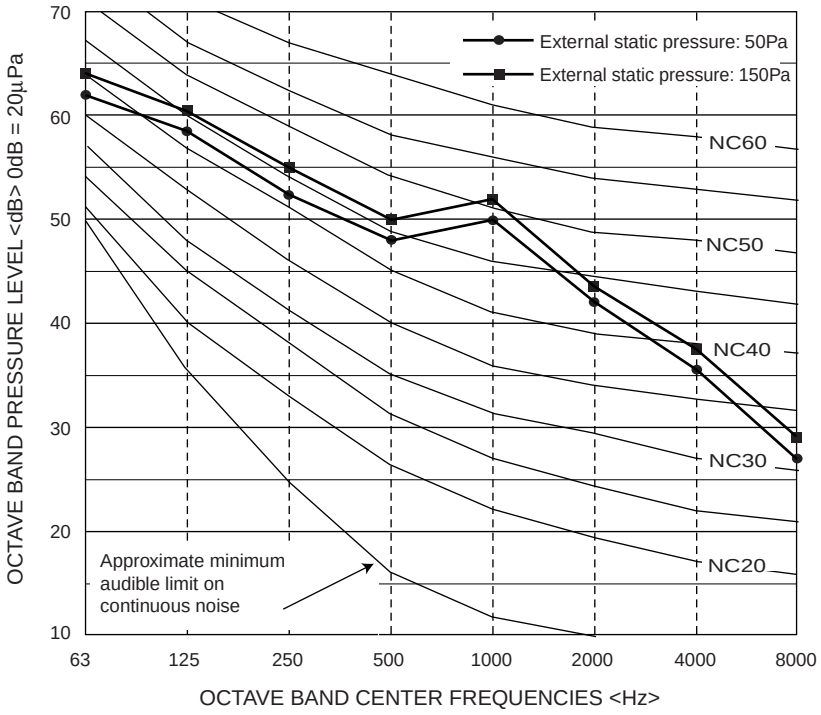

PKA-RP35GAL
PKA-RP50GAL

NOTCH	SPL(dB)	LINE
High	43	○——○
Medium1	41	△——△
Medium2	38	●——●
Low	36	▲——▲

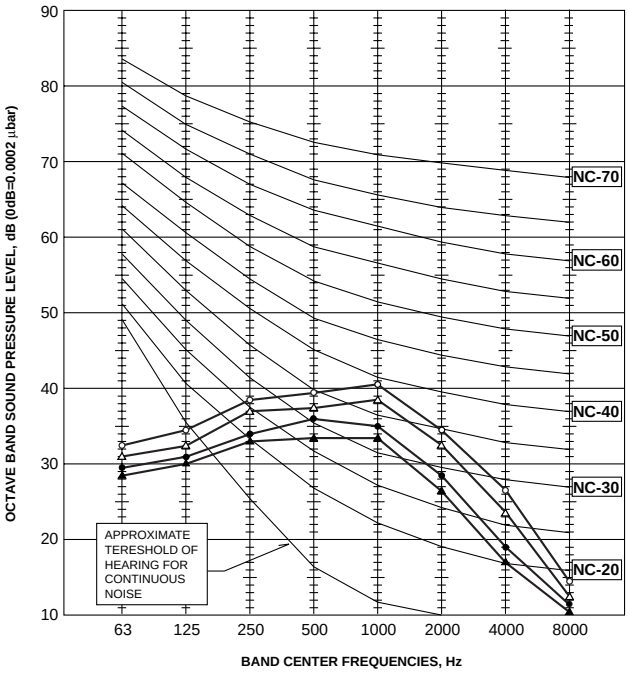

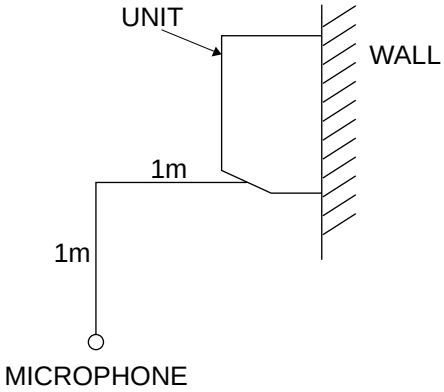

PKA-RP60FAL
PKA-RP71FAL

NOTCH	SPL(dB)	LINE
High	45	○——○
Low	39	●——●

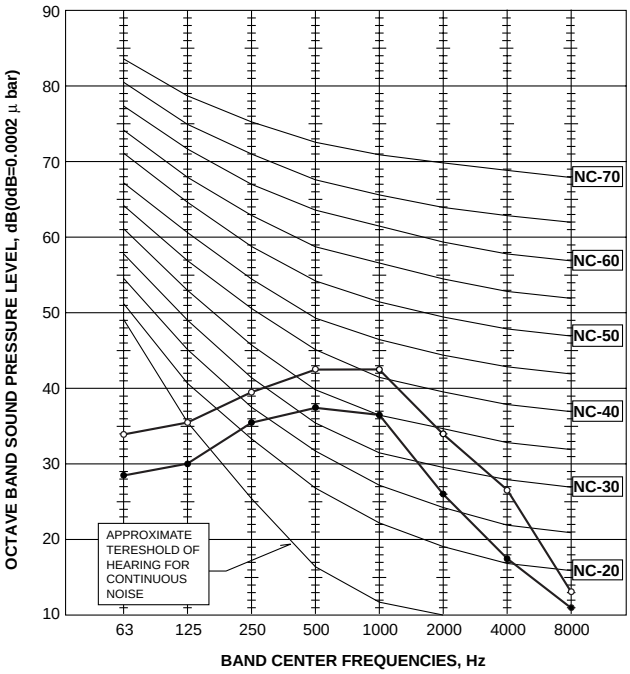

PKA-RP100FAL

NOTCH	SPL(dB)	LINE
High	46	○——○
Low	41	●——●

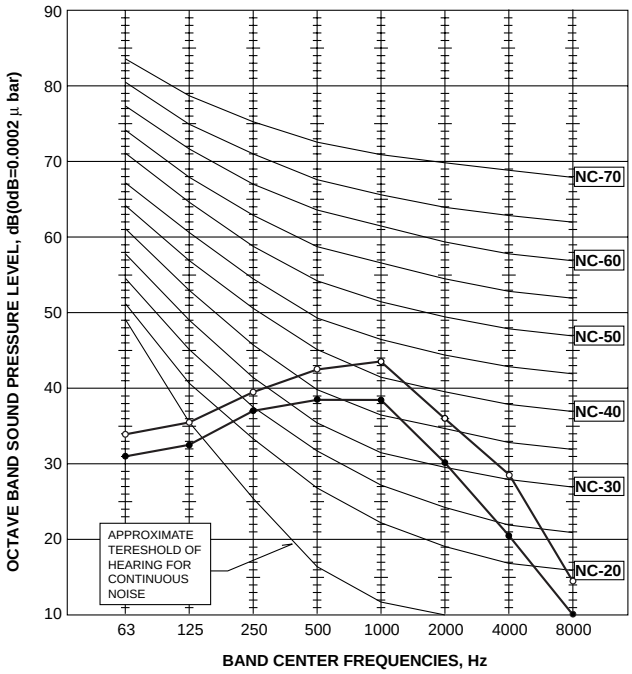

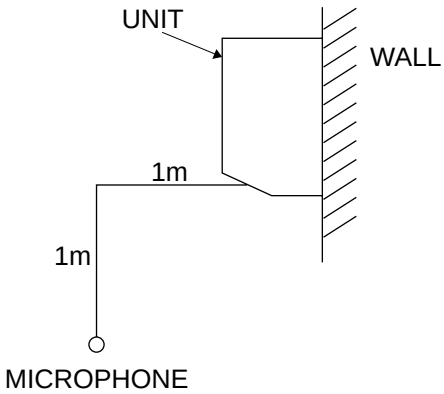

PCA-RP50GA

NOTCH	SPL(dB)	LINE
High	42	○——○
Medium1	40	△——△
Medium2	38	●——●
Low	37	▲——▲

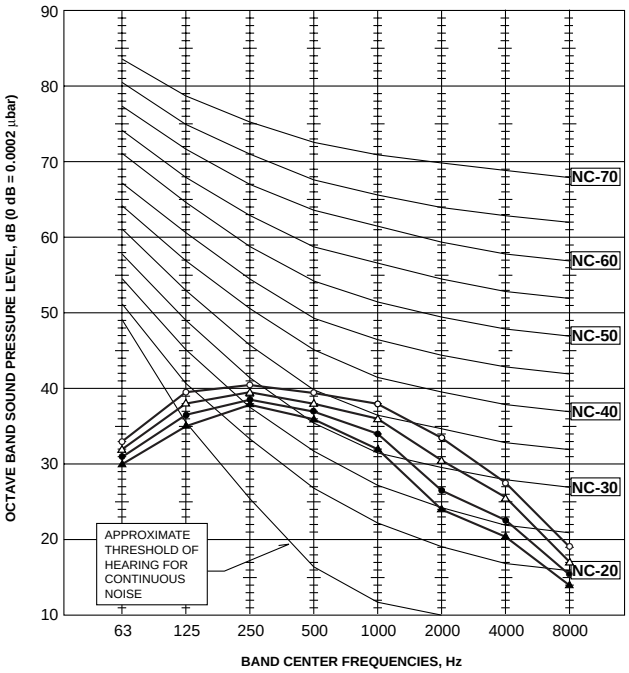

PCA-RP60GA
PCA-RP71GA

NOTCH	SPL(dB)	LINE
High	43	○——○
Medium1	41	△——△
Medium2	39	●——●
Low	37	▲——▲

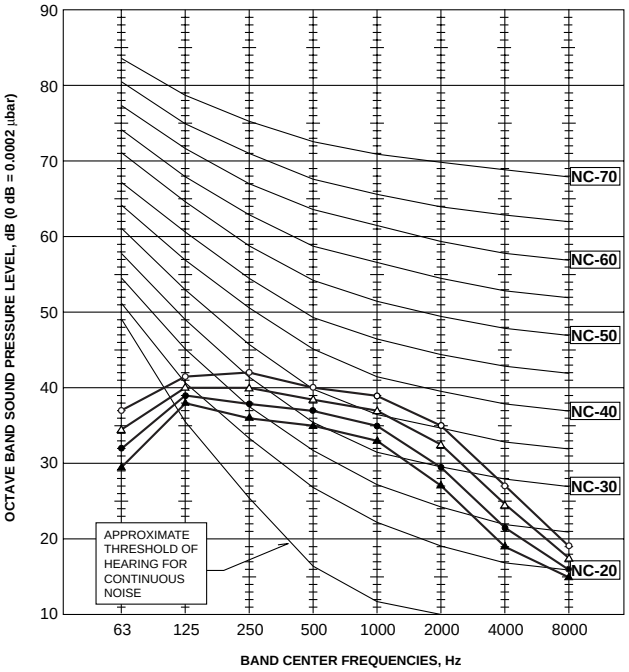

PCA-RP100GA

NOTCH	SPL(dB)	LINE
High	45	○——○
Medium1	43	△——△
Medium2	41	●——●
Low	40	▲——▲

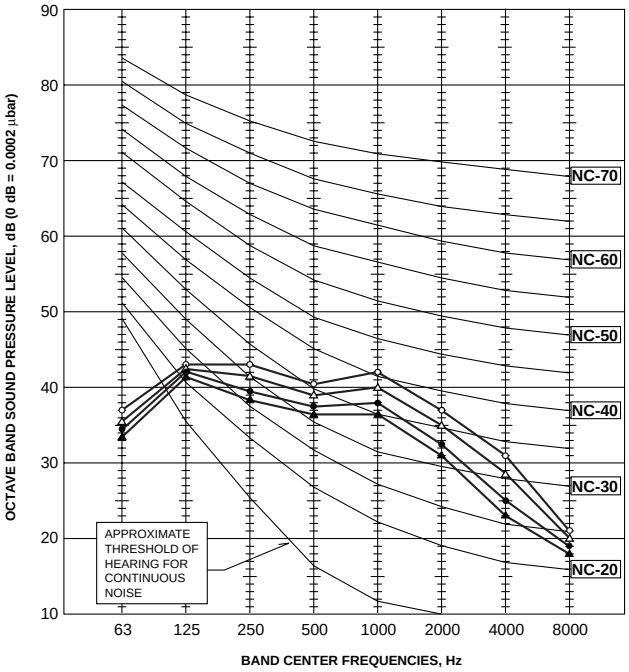

PCA-RP125GA

NOTCH	SPL(dB)	LINE
High	46	○——○
Medium1	45	△——△
Medium2	43	●——●
Low	41	▲——▲

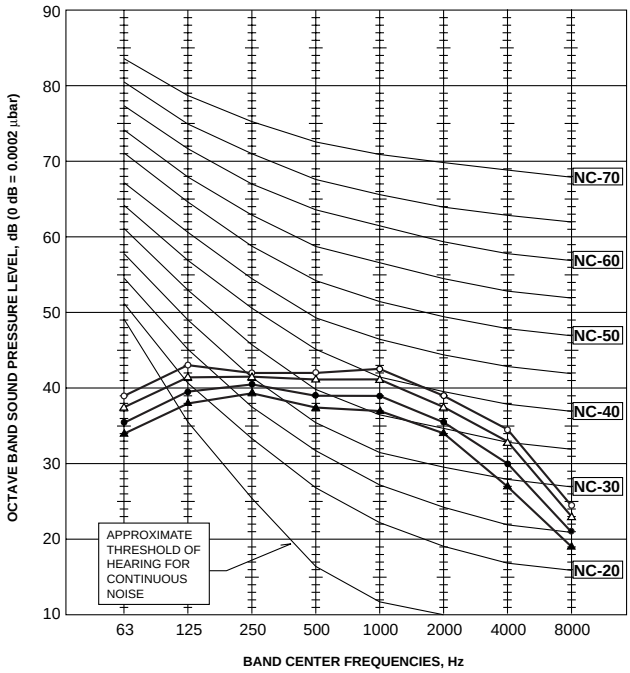

PCA-RP140GA

NOTCH	SPL(dB)	LINE
High	48	○——○
Medium1	46	△——△
Medium2	44	●——●
Low	42	▲——▲

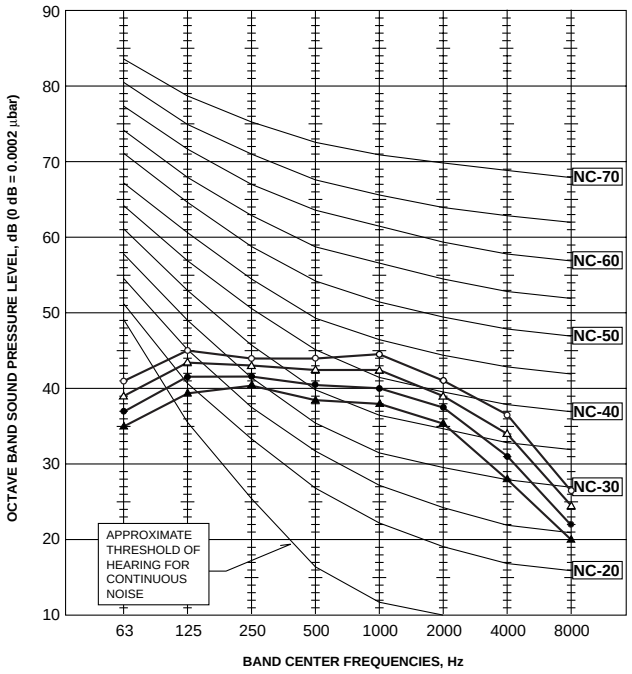

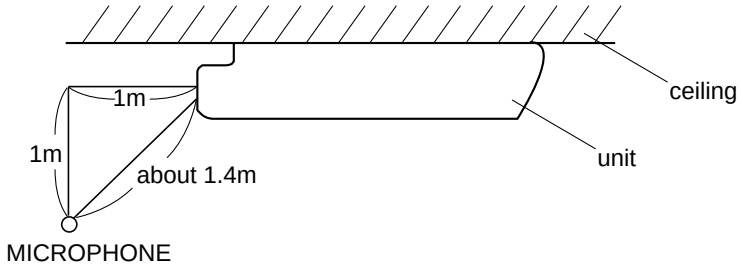

PCA-RP71HA

NOTCH	SPL(dB)	LINE
High	38	○——○
Low	34	●——●

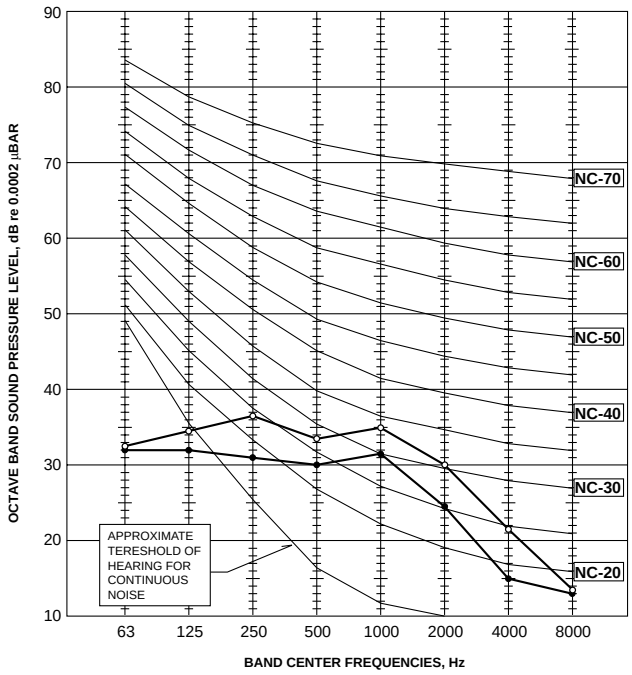

PCA-RP125HA

NOTCH	SPL(dB)	LINE
High	50	○——○
Low	44	●——●

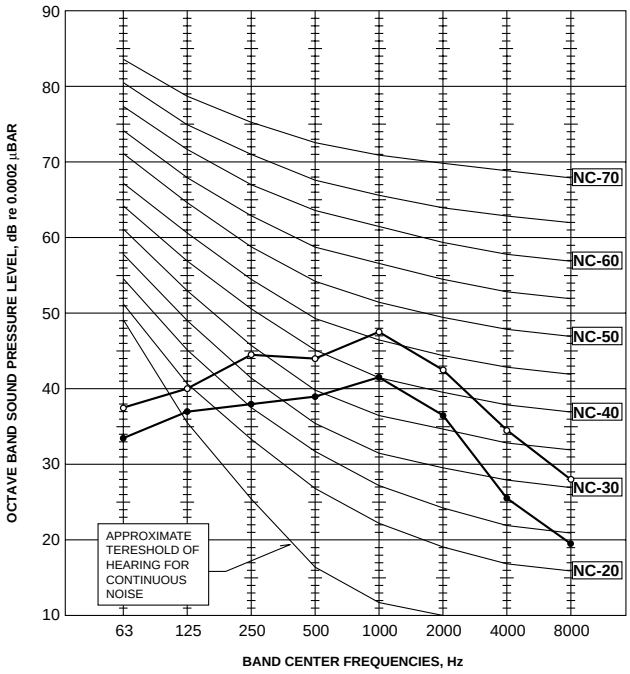

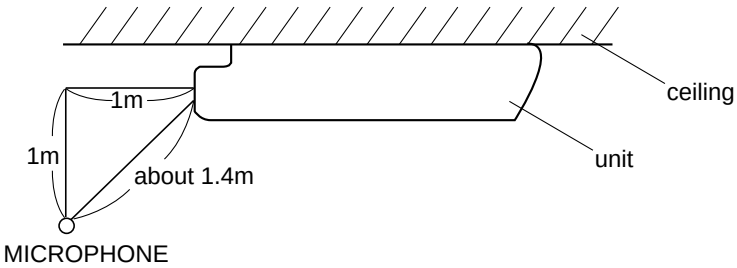

PSA-RP71GA

NOTCH	SPL(dB)	LINE
High	45	○——○
Low	40	●——●

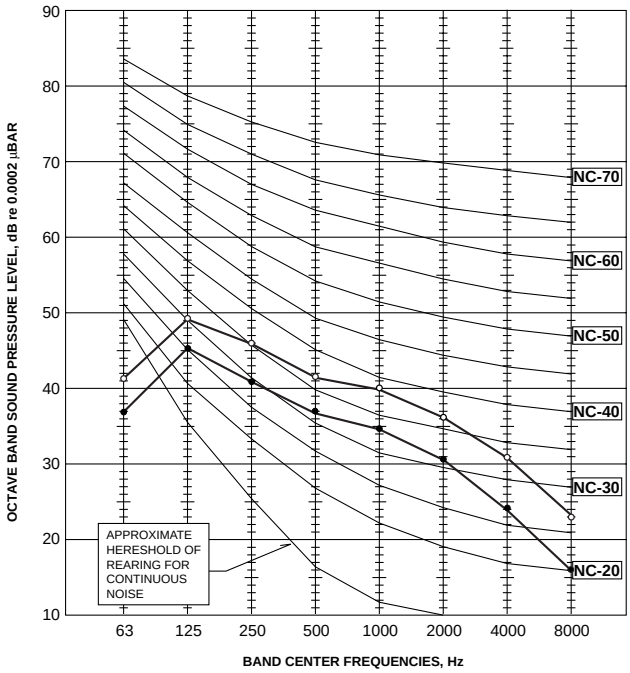

PSA-RP100GA

NOTCH	SPL(dB)	LINE
High	49	○——○
Low	44	●——●

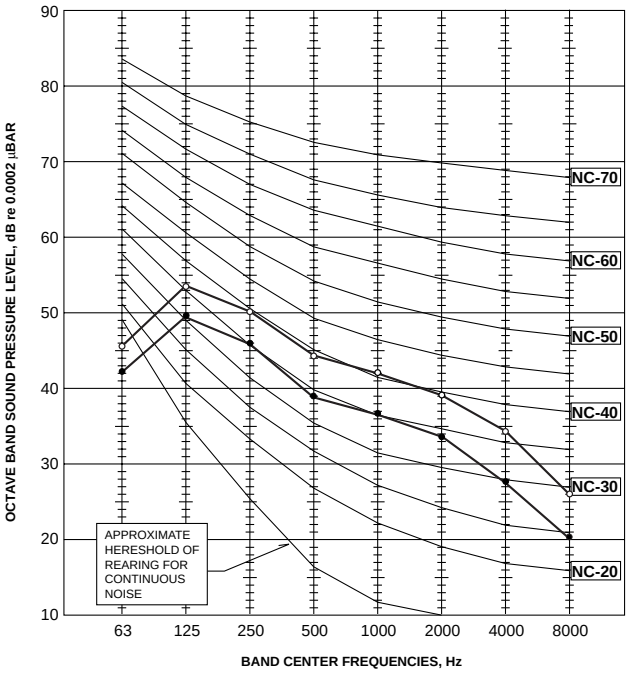

PSA-RP125GA

NOTCH	SPL(dB)	LINE
High	51	○——○
Low	46	●——●

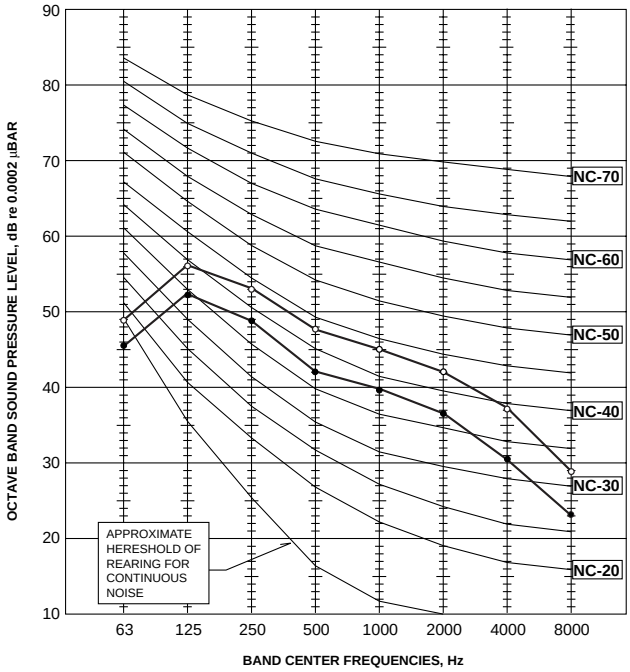

PSA-RP140GA

NOTCH	SPL(dB)	LINE
High	52	○——○
Low	47	●——●

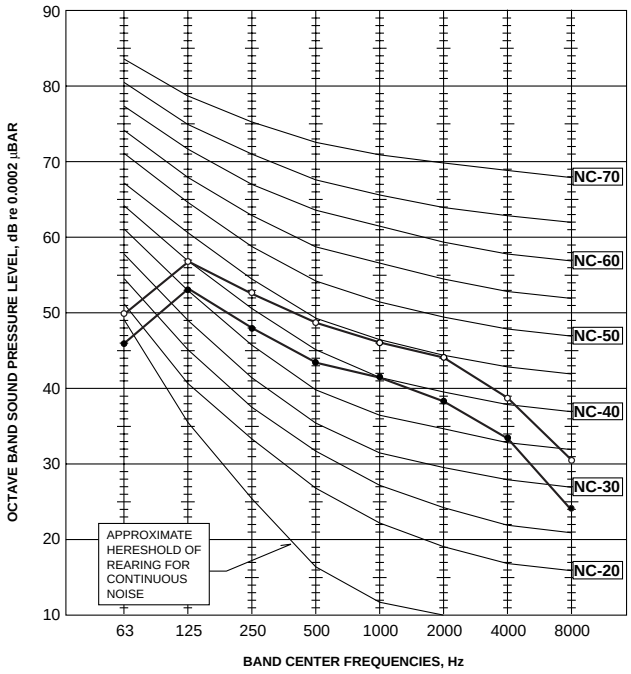

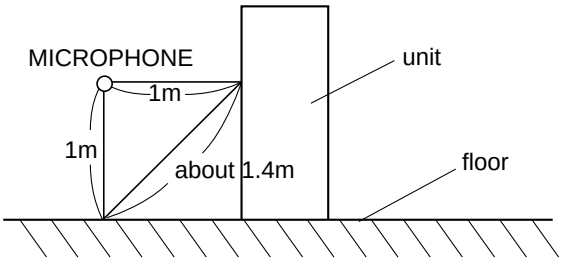

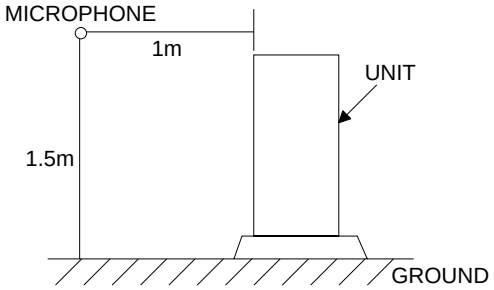

PUHZ-RP35VHA
PUHZ-RP50VHA

MODE	SPL(dB)	LINE
COOLING	44	○——○
HEATING	46	●——●

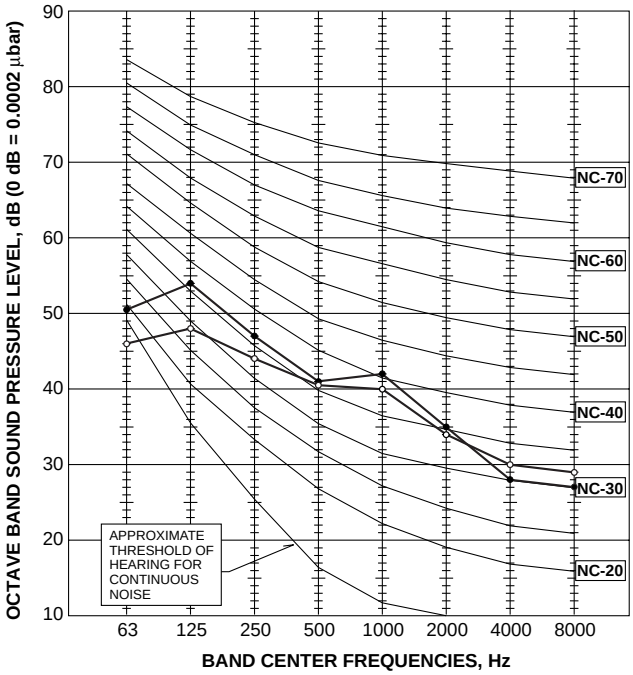

PUHZ-RP60VHA
PUHZ-RP71VHA

MODE	SPL(dB)	LINE
COOLING	47	○——○
HEATING	48	●——●

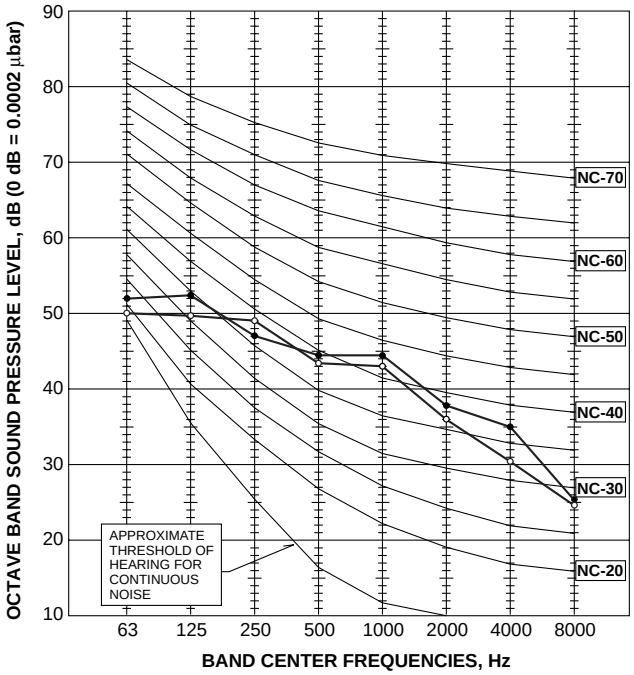

PUHZ-RP100VHA
PUHZ-RP100YHA

MODE	SPL(dB)	LINE
COOLING	49	○——○
HEATING	51	●——●

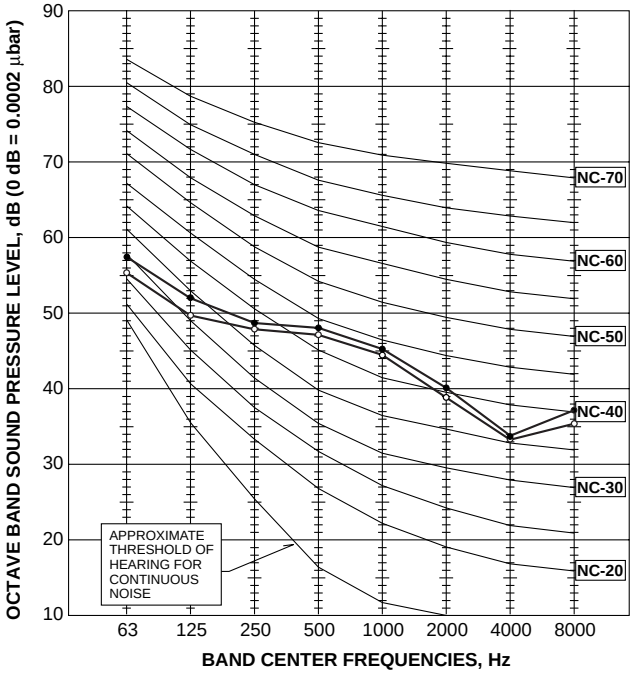

PUHZ-RP125VHA
PUHZ-RP140VHA
PUHZ-RP125YHA
PUHZ-RP140YHA

MODE	SPL(dB)	LINE
COOLING	50	○——○
HEATING	52	●——●

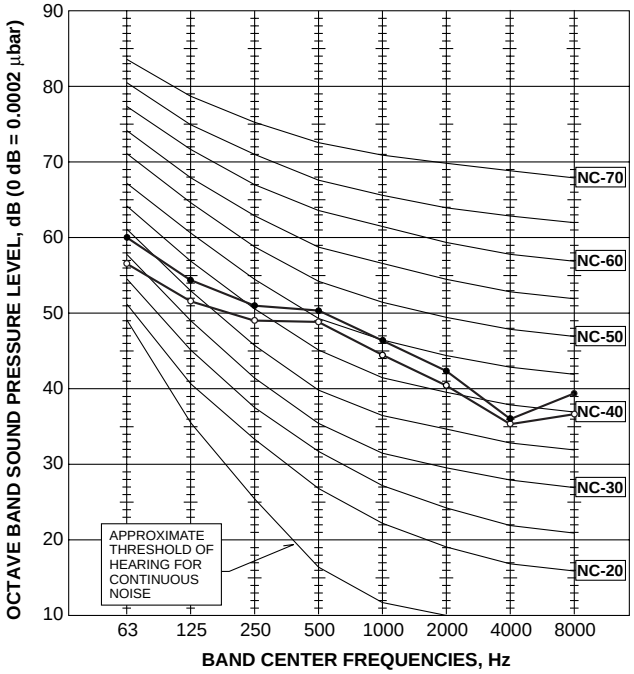

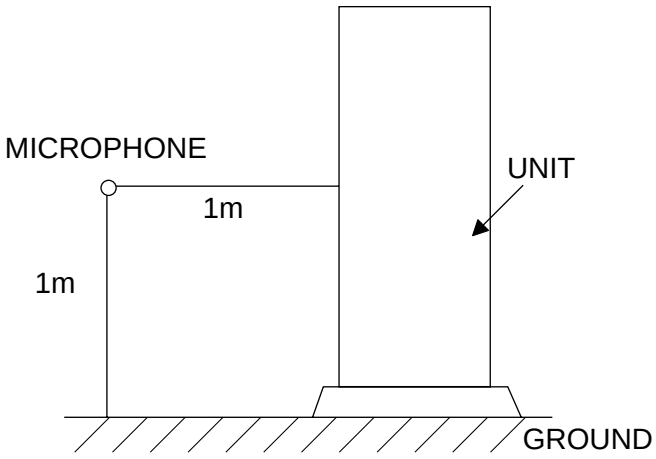

PUHZ-RP200YHA

MODE	SPL(dB)	LINE
COOLING	55.0	○——○
HEATING	56.0	●——●

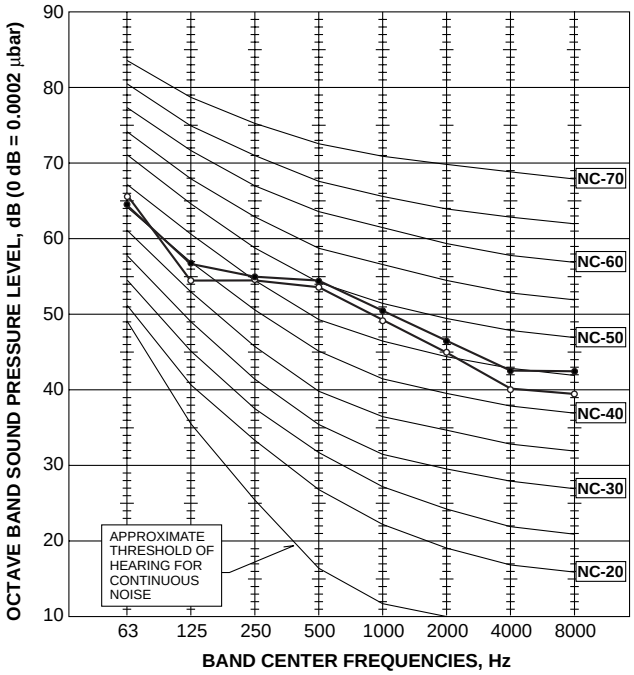

PUHZ-RP250YHA

MODE	SPL(dB)	LINE
COOLING	58.0	○——○
HEATING	58.0	●——●

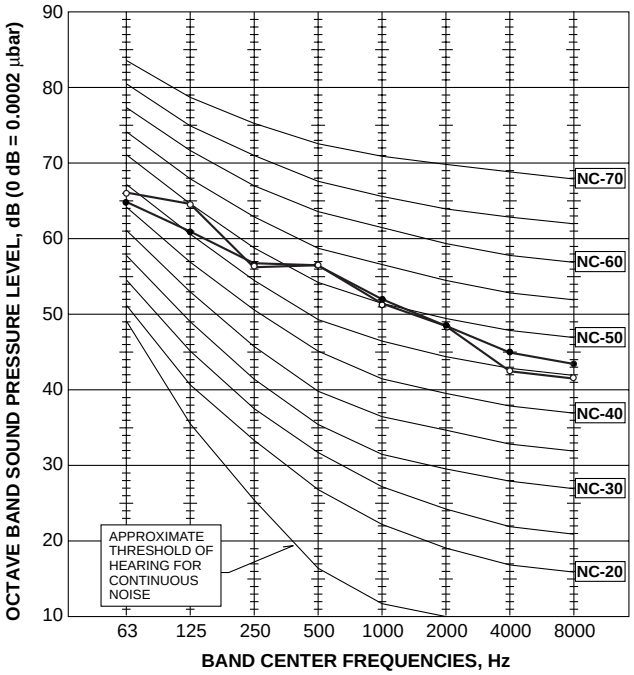

11 OPTIONAL PARTS

11-1. INDOOR UNIT

Part Name		Model Name	Applicable model
Remote sensor		PAC-SE41TS-E	All models
Remote operation adapter		PAC-SF40RM-E	
Remote on/off adapter		PAC-SE55RA-E	
Power supply terminal kit	L/N/Earth	PAC-SG96HR-E	All models except PCA-RP·HA, PEAD-RP·GA, PEH-RP·MYA
	L/N	PAC-SG97HR-E	PCA-RP·HA PEAD-RP·GA
Multi-functional casement		PAC-SG03TM-E	PLA-RP·AA
High-efficiency filter element (PAC-SG03TM-E is needed.)		PAC-SG01KF	
Grille + Wireless remote controller		PLP-6AALM	
Grille + Wired remote controller		PLP-6AAMD	
Air outlet shutter plate (20 set, 2pcs/set)		PAC-SG06SP-E	
Wireless remote controller + Wireless Adapter		PAR-SL99B-E	PCA-RP·GA
Drain lift up mechanism		PAC-SH20DM-E	PCA-RP50,60GA
		PAC-SH21DM-E	PCA-RP71GA
		PAC-SH22DM-E	PCA-RP100,125,140GA
High-efficiency filter		PAC-SE80KF-E	PCA-RP50GA
		PAC-SE81KF-E	PCA-RP60,71,100GA
		PAC-SE82KF-E	PCA-RP125,140GA
Duct flange for fresh air		PAC-SF28OF-E	PCA-RP·HA
Filter element		PAC-SG38KF-E	
Decoration cover		PAC-SF81KC-E	PCA-RP71HA
(Front + Suspending bracket cover)		PAC-SF82KC-E	PCA-RP125HA
Wired remote controller		PAR-21MAAT-E	PKA-RP·GAL
(with terminal bed)			PKA-RP·FAL
Drain lift up mechanism		PAC-SE90DM-E	PKA-RP·FAL
Motor		PAC-SK005MT-F	PEAD-RP71EA
(for high external static pressure)		PAC-SK004MT-F	PEAD-RP100EA
		PAC-SK003MT-F	PEAD-RP125,140EA
Drain lift up mechanism		PAC-KE03DM-F	PEAD-RP·EA
Insulation kit		PAC-SK010DK	PEAD-RP·GA
Wiring kit		PAC-SK020EC	

11-2. OUTDOOR UNIT

Part Name		Model Name	Applicable model
M-NET adapter		PAC-SF70MA-E	All models
A-control service tool		PAC-SK52ST	
Drain socket		PAC-SG61DS-E	PUHZ-RP35-140
Air outlet guide		PAC-SG58SG-E	PUHZ-RP35, 50
(RP100,125,140 needs two piece.)		PAC-SG59SG-E	PUHZ-RP60-140
Air protect guide		PAC-SG56AG-E	PUHZ-RP35, 50
		PAC-SG57AG-E	PUHZ-RP60-140
	Front, Rear	PAC-SG86AG-E	PUHZ-RP200, 250
	Left, Right	PAC-SG87AG-E	
Drain pan		PAC-SG63DP-E	PUHZ-RP35, 50
		PAC-SG64DP-E	PUHZ-RP60-140
		PAC-SF60MA-E	PUHZ-RP200, 250
Filter dryer	(ϕ6.35)	PAC-SG81DR-E	PUHZ-RP35, 50
	(ϕ9.52)	PAC-SG82DR-E	PUHZ-RP60-200
	(ϕ12.7)	PAC-SG85DR-E	PUHZ-RP250
Distribution pipe	(Twin)	MSDD-50SR-E	PUHZ-RP100-140
		MSDD-50WR-E	PUHZ-RP200, 250
	(Triple)	MSDT-111R-E	PUHZ-RP140-250
	(Quadruple)	MSDF-1111R-E	PUHZ-RP200, 250
Joint pipe	(ϕ6.35 → ϕ9.52)	PAC-SG72RJ-E	PUHZ-RP35, 50
(Unit →Extension pipe)	(ϕ9.52 → ϕ12.7)	PAC-SG73RJ-E	PUHZ-RP35, 50, 200
	(ϕ15.88 → ϕ19.05)	PAC-SG75RJ-E	PUHZ-RP60-140
Centralized drain kit		PAC-SG92DS-E	PUHZ-RP200, 250

Mr.SLIM™

MITSUBISHI ELECTRIC CORPORATION
HEAD OFFICE : MITSUBISHI DENKI BLDG., 2-2-3, MARUNOUCHI, CHIYODA-KU, TOKYO 100-8310, JAPAN

©Copyright 2005 MITSUBISHI ELECTRIC ENGINEERING CO., LTD.
Distributed in May 2005 No.OCS01 PDF8
Made in Japan.

New publication, effective May 2005.
Specifications subject to change without notice.