Back to Index

January 2009 No. U155

LOSSNAY

HAND BOOK

FOR DEALERS

Model: LGH-15RX5-E
LGH-25RX5-E
LGH-35RX5-E
LGH-50RX5-E
LGH-65RX5-E
LGH-80RX5-E
LGH-100RX5-E

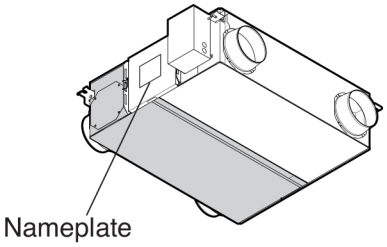

LGH-150RX5-E
LGH-200RX5-E

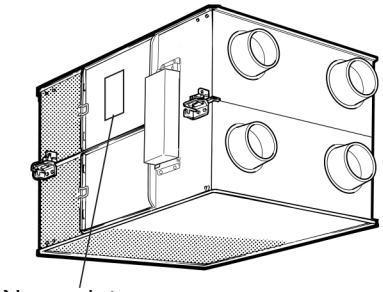

Remote controller (Parts number is not set.)

Model: PZ-60DR-E

Filter (Parts number is not set.)

Model: PZ-25RF8-E PZ-35RF8-E
PZ-50RF8-E PZ-65RF8-E
PZ-80RF8-E PZ-100RF8-E

Repair work should be performed by the manufacturer, its service agent or similarly qualified person in order to avoid hazards.

MITSUBISHI ELECTRIC CORPORATION

Contents

1. Safety precautions.....3
2. Specifications 4-8
3. Outside dimensions..... 9-18
4. Electrical wiring diagrams 19-20
5. Basic circuit diagram 21
6. Fundamentals of operation 22-44
7. Troubleshooting 45-65
8. Disassembly and assembly..... 66-68
9. Parts catalog 69-123
   - LGH-15RX5-E 70-75
   - LGH-25RX5-E 76-81
   - LGH-35RX5-E 82-87
   - LGH-50RX5-E 88-93
   - LGH-65RX5-E 94-99
   - LGH-80RX5-E 100-105
   - LGH-100RX5-E 106-111
   - LGH-150RX5-E 112-117
   - LGH-200RX5-E 118-123

1. Safety precautions

●Please be sure to read the following safety precautions thoroughly before commencing with the maintenance work, and conduct the inspection and repair of the product in a safe manner.

●The types and levels of danger that may arise if the product is handled incorrectly are described by using the warning symbols shown below.

⚠ Warning

Incorrect handling of the product may result in serious injury or death.

◇Electric shock

If you must inspect the circuitry while the power is on, do not touch the live parts.

(Failure to heed this warning may result in electric shock.)



Caution for electric shock

◇Turn off the power supply

Be sure to shut off the power supply isolator before disassembling the unit for repair.

(Failure to heed this warning may result in electric shock.)



Be sure to follow this instruction.

◇Modification is prohibited

Do not modify the unit.

(Failure to heed this warning may result in electric shock, fire and/or bodily injury.)



Prohibited

◇Use proper parts and tools

For repair, be sure to use the parts listed in the service parts list of the applicable unit model and use the proper tools.

(Failure to heed this warning may result in electric shock, fire and/or bodily injury.)



Be sure to follow this instruction.

◇Proper electric work

Use the electric wires designated for electric work, and conduct electric work in accordance with the "Electric Installation Engineering Standard," the "Indoor Wiring Regulations," and the Installation Work Guide.

(Incomplete connection or wiring installation may result in electric shock and/or fire.)



Be sure to follow this instruction.

◇Replace damaged and/or degraded parts

Be sure to replace the power-supply cord and lead wire in the event that they are damaged and/or degraded.

(Failure to heed this warning may result in electric shock and/or fire.)



Be sure to follow this instruction.

◇Check insulation

Be sure to measure the insulation resistance once the repair work is complete, and turn on the power supply after verifying that an insulation resistance of at least 10MΩ is obtained.

(If an insulation problem exists, it may result in electric shock.)



Be sure to follow this instruction.

⚠ Caution

Incorrect handling of the product may result in serious injury or damage to properties including buildings and equipment.

◇Caution for bodily injury

Do not conduct any work at a location where you do not have a sure footing.

(Failure to heed this caution may result in a fall.)



Prohibited

◇Wear gloves

Wear gloves when conducting work.

(Failure to heed this caution may result in injury to your hands from sharp metal or other edges.)



Be sure to follow this instruction.

Request during repair

•Inspect the grounding, and repair it if incomplete. Make sure that a power supply isolator is being installed, if not, install one.

●Make sure that the product operates correctly upon completion of repair. Clean the product as well as the surrounding area, and then notify the customer of the completion of repair.

2. Specifications

MODEL		LGH-15RX5-E							
Heat exchange system		Air-to-air total heat exchange(sensible heat + latent heat exchange)							
Heat exchange element material		Partition・spacing plate-special treated paper							
Cladding		Galvanized steel sheet							
Heat insulating material		Self-extinguishing urethane foam							
Motor		Totally enclosed capacitor permanent split-phase induction motor.4 poles,2 units							
Blower		180mm dia. Centrifugal fan							
Filter material		Non-woven fabrics filter(Gravitational method 82%, EU-G3)							
Applicable air condition of setting environment		The setting air condition shall be between -10℃ to 40℃, 80%RH or less.							
Applicable air condition range of outdoor and indoor		OA temperature shall be -15℃ to +40℃, 80%RH, or less,with general air conditioning room environment.							
Functions		Lossnay ventilation/Bypass ventilation High(Extra high)-Low-Extra Low switching							
Weight		20kg							
Frequency/ Power source		50Hz/Single phase 220-240V							
Ventilation mode		Lossnay ventilation				Bypass ventilation			
Fan speed		Extra high	High	Low	Extra low	Extra high	High	Low	Extra low
Current	(A)	0.44-0.46	0.37-0.38	0.25-0.25	0.14-0.15	0.45-0.46	0.37-0.38	0.25-0.26	0.14-0.15
Power consumption	(W)	96-110	80-90	53-59	30-35	97-110	81-91	54-61	30-35
Air volume	(m^3/h)	150	150	110	70	150	150	110	70
	(L/s)	42	42	31	19	42	42	31	19
External static pressure	(mmH_2O)	10.2-10.7	6.1-7.1	3.6-4.1	1.4	10.2-10.7	6.1-7.1	3.6-4.1	1.4
	(Pa)	100-105	65-70	35-40	14	100-105	65-70	35-40	14
Temperature exchange efficiency (%)		82.0	82.0	84.0	85.5	—	—	—	—
Enthalpy exchange efficiency (%)	Heating	75.0	75.0	77.5	81.0	—	—	—	—
	Cooling	73.0	73.0	76.5	81.0	—	—	—	—
Noise(dB)	Measured at 1.5m under the center of panel in an anechoic chamber	27.5-28	26.5-27	22-23.5	18	28.5-29	27-28	23-24	18-19
Starting current		Under 0.8A less							
Insulation resistance		10MΩ or more(500V megger)							
Dielectric strength		AC 1500V 1 minute							

MODEL		LGH-25RX5-E							
Heat exchange system		Air-to-air total heat exchange(sensible heat + latent heat exchange)							
Heat exchange element material		Partition・spacing plate-special treated paper							
Cladding		Galvanized steel sheet							
Heat insulating material		Self-extinguishing urethane foam							
Motor		Totally enclosed capacitor permanent split-phase induction motor.4 poles,2 units							
Blower		180mm dia. Centrifugal fan							
Filter material		Non-woven fabrics filter(Gravitational method 82%, EU-G3)							
Applicable air condition of setting environment		The setting air condition shall be between -10℃ to 40℃, 80%RH or less.							
Applicable air condition range of outdoor and indoor		OA temperature shall be -15℃ to +40℃, 80%RH, or less,with general air conditioning room environment.							
Functions		Lossnay ventilation/Bypass ventilation High(Extra high)-Low-Extra Low switching							
Weight		20kg							
Frequency/ Power source		50Hz/Single phase 220-240V							
Ventilation mode		Lossnay ventilation				Bypass ventilation			
Fan speed		Extra high	High	Low	Extra low	Extra high	High	Low	Extra low
Current	(A)	0.52-0.55	0.47-0.48	0.26-0.27	0.17-0.18	0.53-0.55	0.47-0.48	0.26-0.27	0.17-0.18
Power consumption	(W)	113-129	102-114	56-62	36-42	115-131	103-115	56-63	36-42
Air volume	(m^3/h)	250	250	155	105	250	250	155	105
	(L/s)	69	69	43	29	69	69	43	29
External static pressure	(mmH_2O)	8.2-8.7	5.1-6.1	2-2.5	0.9	8.2-8.7	5.1-6.1	2-2.5	0.9
	(Pa)	80-85	50-60	20-25	9	80-85	50-60	20-25	9
Temperature exchange efficiency (%)		79.0	79.0	81.5	83.5	—	—	—	—
Enthalpy exchange efficiency (%)	Heating	69.5	69.5	74.0	77.5	—	—	—	—
	Cooling	68.0	68.0	72.5	76.0	—	—	—	—
Noise(dB)	Measured at 1.5m under the center of panel in an anechoic chamber	26-27	25-26	20-21.5	18-19	26.5-27.5	25.5-26.5	20.5-22	18-19
Starting current		Under 0.9A less							
Insulation resistance		10MΩ or more(500V megger)							
Dielectric strength		AC 1500V 1 minute							

MODEL		LGH-35RX5-E							
Heat exchange system		Air-to-air total heat exchange(sensible heat + latent heat exchange)							
Heat exchange element material		Partition・spacing plate-special treated paper							
Cladding		Galvanized steel sheet							
Heat insulating material		Self-extinguishing urethane foam							
Motor		Totally enclosed capacitor permanent split-phase induction motor.4 poles,2 units							
Blower		220mm dia. Centrifugal fan							
Filter material		Non-woven fabrics filter(Gravitational method 82%, EU-G3)							
Applicable air condition of setting environment		The setting air condition shall be between -10℃ to 40℃, 80%RH or less.							
Applicable air condition range of outdoor and indoor		OA temperature shall be -15℃ to +40℃, 80%RH, or less,with general air conditioning room environment.							
Functions		Lossnay ventilation/Bypass ventilation High(Extra high)-Low-Extra Low switching							
Weight		29kg							
Frequency/ Power source		50Hz/Single phase 220-240V							
Ventilation mode		Lossnay ventilation				Bypass ventilation			
Fan speed		Extra high	High	Low	Extra low	Extra high	High	Low	Extra low
Current	(A)	0.92-0.92	0.74-0.74	0.5-0.51	0.28-0.3	0.93-0.94	0.77-0.77	0.51-0.52	0.28-0.3
Power consumption	(W)	195-212	160-169	105-116	58-69	197-217	164-173	105-116	58-69
Air volume	(m^3/h)	350	350	210	115	350	350	210	115
	(L/s)	97	97	58	32	97	97	58	32
External static pressure	(mmH_2O)	15.8-16.3	7.6-8.2	2.5-3.1	0.9	15.8-16.3	7.6-8.2	2.5-3.1	0.9
	(Pa)	155-160	75-80	25-30	9	155-160	75-80	25-30	9
Temperature exchange efficiency (%)		80.0	80.0	85.0	88.0	-	-	-	-
Enthalpy exchange efficiency (%)	Heating	71.5	71.5	76.5	81.5	-	-	-	-
	Cooling	71.0	71.0	75.5	81.0	-	-	-	-
Noise (dB)	Measured at 1.5m under the center of panel in an anechoic chamber	32-32	28.5-29.5	21.5-23	18	32.5-32.5	29.5-30.5	21.5-24	18
Starting current		Under 2.4A less							
Insulation resistance		10MΩ or more(500V megger)							
Dielectric strength		AC 1500V 1 minute							

MODEL		LGH-50RX5-E							
Heat exchange system		Air-to-air total heat exchange(sensible heat + latent heat exchange)							
Heat exchange element material		Partition・spacing plate-special treated paper							
Cladding		Galvanized steel sheet							
Heat insulating material		Self-extinguishing urethane foam							
Motor		Totally enclosed capacitor permanent split-phase induction motor.4 poles,2 units							
Blower		220mm dia. Centrifugal fan							
Filter material		Non-woven fabrics filter(Gravitational method 82%, EU-G3)							
Applicable air condition of setting environment		The setting air condition shall be between -10℃ to 40℃, 80%RH or less.							
Applicable air condition range of outdoor and indoor		OA temperature shall be -15℃ to +40℃, 80%RH, or less,with general air conditioning room environment.							
Functions		Lossnay ventilation/Bypass ventilation High(Extra high)-Low-Extra Low switching							
Weight		32kg							
Frequency/ Power source		50Hz/Single phase 220-240V							
Ventilation mode		Lossnay ventilation				Bypass ventilation			
Fan speed		Extra high	High	Low	Extra low	Extra high	High	Low	Extra low
Current	(A)	1.2-1.25	1.0-1.0	0.85-0.85	0.4-0.4	1.25-1.25	1.0-1.0	0.85-0.85	0.4-0.4
Power consumption	(W)	255-286	207-228	175-190	80-95	260-290	210-230	180-195	80-95
Air volume	(m^3/h)	500	500	390	180	500	500	390	180
	(L/s)	139	139	108	50	139	139	108	50
External static pressure	(mmH_2O)	15.3-15.8	6.6-9.2	4.1-6.1	1.0	15.3-15.8	6.6-9.2	4.1-6.1	1.0
	(Pa)	150-155	65-90	40-60	10	150-155	65-90	40-60	10
Temperature exchange efficiency (%)		78.0	78.0	81.0	86.0	-	-	-	-
Enthalpy exchange efficiency (%)	Heating	69.0	69.0	71.0	78.0	-	-	-	-
	Cooling	66.5	66.5	68.0	77.0	-	-	-	-
Noise (dB)	Measured at 1.5m under the center of panel in an anechoic chamber	33-34	30.5-32	26.5-28	19.0	34-35	31-32.5	27-29	19.0
Starting current		Under 3.0A less							
Insulation resistance		10MΩ or more(500V megger)							
Dielectric strength		AC 1500V 1 minute							

MODEL		LGH-65RX5-E							
Heat exchange system		Air-to-air total heat exchange(sensible heat + latent heat exchange)							
Heat exchange element material		Partition・spacing plate-special treated paper							
Cladding		Galvanized steel sheet							
Heat insulating material		Self-extinguishing urethane foam							
Motor		Totally enclosed capacitor permanent split-phase induction motor.4 poles,2 units							
Blower		245mm dia. Centrifugal fan							
Filter material		Non-woven fabrics filter(Gravitational method 82%, EU-G3)							
Applicable air condition of setting environment		The setting air condition shall be between -10℃ to 40℃, 80%RH or less.							
Applicable air condition range of outdoor and indoor		OA temperature shall be -15℃ to +40℃, 80%RH, or less,with general air conditioning room environment.							
Functions		Lossnay ventilation/Bypass ventilation High(Extra high)-Low-Extra Low switching							
Weight		40kg							
Frequency/ Power source		50Hz/Single phase 220-240V							
Ventilation mode		Lossnay ventilation				Bypass ventilation			
Fan speed		Extra high	High	Low	Extra low	Extra high	High	Low	Extra low
Current	(A)	1.7-1.8	1.5-1.5	1.2-1.2	0.6-0.6	1.7-1.8	1.5-1.5	1.2-1.2	0.6-0.6
Power consumption	(W)	350-380	308-322	248-265	120-140	350-385	310-335	250-265	120-140
Air volume	(m^3/h)	650	650	520	265	650	650	520	265
	(L/s)	181	181	144	74	181	181	144	74
External static pressure	(mmH_2O)	11.2-12.2	6.1-8.2	4.1-5.1	0.8	11.2-12.2	6.1-8.2	4.1-5.1	0.8
	(Pa)	110-120	60-80	40-50	8	110-120	60-80	40-50	8
Temperature exchange efficiency (%)		77.0	77.0	80.0	86.0	–	–	–	
Enthalpy exchange efficiency (%)	Heating	68.5	68.5	70.5	78.0	–	–	–	
	Cooling	66.0	66.0	68.5	77.0	–	–	–	
Noise (dB)	Measured at 1.5m under the center of panel in an anechoic chamber	34-34.5	32-33	28.5-31.5	22	34.5-35	32.5-33.5	28.5-30.5	22-22.5
Starting current		Under 4.4A less							
Insulation resistance		10MΩ or more(500V megger)							
Dielectric strength		AC 1500V 1 minute							

MODEL		LGH-80RX5-E							
Heat exchange system		Air-to-air total heat exchange(sensible heat + latent heat exchange)							
Heat exchange element material		Partition・spacing plate-special treated paper							
Cladding		Galvanized steel sheet							
Heat insulating material		Self-extinguishing urethane foam							
Motor		Totally enclosed capacitor permanent split-phase induction motor.4 poles,2 units							
Blower		245mm dia. Centrifugal fan							
Filter material		Non-woven fabrics filter(Gravitational method 82%, EU-G3)							
Applicable air condition of setting environment		The setting air condition shall be between -10℃ to 40℃, 80%RH or less.							
Applicable air condition range of outdoor and indoor		OA temperature shall be -15℃ to +40℃, 80%RH, or less,with general air conditioning room environment.							
Functions		Lossnay ventilation/Bypass ventilation High(Extra high)-Low-Extra Low switching							
Weight		53kg							
Frequency/ Power source		50Hz/Single phase 220-240V							
Ventilation mode		Lossnay ventilation				Bypass ventilation			
Fan speed		Extra high	High	Low	Extra low	Extra high	High	Low	Extra low
Current	(A)	1.75-1.75	1.6-1.6	1.45-1.45	0.60-0.65	1.75-1.75	1.6-1.6	1.45-1.45	0.60-0.65
Power consumption	(W)	380-415	345-370	315-340	125-145	380-415	345-370	315-340	120-145
Air volume	(m^3/h)	800	800	700	355	800	800	700	355
	(L/s)	222	222	194	99	222	222	194	99
External static pressure	(mmH_2O)	14.8-15.3	10.7-12.2	8.2-9.7	2	14.8-15.3	10.7-12.2	8.2-9.7	2
	(Pa)	145-150	105-120	80-95	20	145-150	105-120	80-95	20
Temperature exchange efficiency (%)		79.0	79.0	80.5	87.5	–	–	–	–
Enthalpy exchange efficiency (%)	Heating	71.0	71.0	72.5	79.5	–	–	–	–
	Cooling	70.0	70.0	71.5	79.5	–	–	–	–
Noise (dB)	Measured at 1.5m under the center of panel in an anechoic chamber	33.5-34.5	32-33	30-31	22	34.5-35.5	33-34	31-32	22
Starting current		Under 3.8A less							
Insulation resistance		10MΩ or more(500V megger)							
Dielectric strength		AC 1500V 1 minute							

MODEL		LGH-100RX5-E							
Heat exchange system		Air-to-air total heat exchange(sensible heat + latent heat exchange)							
Heat exchange element material		Partition・spacing plate-special treated paper							
Cladding		Galvanized steel sheet							
Heat insulating material		Self-extinguishing urethane foam							
Motor		Totally enclosed capacitor permanent split-phase induction motor.4 poles,2 units							
Blower		245mm dia. Centrifugal fan							
Filter material		Non-woven fabrics filter(Gravitational method 82%, EU-G3)							
Applicable air condition of setting environment		The setting air condition shall be between -10℃ to 40℃, 80%RH or less.							
Applicable air condition range of outdoor and indoor		OA temperature shall be -15℃ to +40℃, 80%RH, or less,with general air conditioning room environment.							
Functions		Lossnay ventilation/Bypass ventilation High(Extra high)-Low-Extra Low switching							
Weight		59kg							
Frequency/ Power source		50Hz/Single phase 220-240V							
Ventilation mode		Lossnay ventilation				Bypass ventilation			
Fan speed		Extra high	High	Low	Extra low	Extra high	High	Low	Extra low
Current	(A)	2.3-2.4	2.1-2.1	1.7-1.7	0.9-0.9	2.3-2.4	2.1-2.1	1.7-1.7	0.9-0.9
Power consumption	(W)	500-535	445-475	350-380	175-200	510-550	460-485	365-395	175-200
Air volume	(m^3/h)	1000	1000	755	415	1000	1000	755	415
	(L/s)	278	278	210	115	278	278	210	115
External static pressure	(mmH_2O)	16.3-17.3	10.2-11.2	5.6-6.1	1.8	16.3-17.3	10.2-11.2	5.6-6.1	1.8
	(Pa)	160-170	100-110	55-60	18	160-170	100-110	55-60	18
Temperature exchange efficiency (%)		80.0	80.0	83.0	87.0	–	–	–	–
Enthalpy exchange efficiency (%)	Heating	72.5	72.5	74.0	80.0	–	–	–	–
	Cooling	71.0	71.0	73.0	79.0	–	–	–	–
Noise (dB)	Measured at 1.5m under the center of panel in an anechoic chamber	36-37	34-35	31-32.5	21-22	37-38	35-36	32-33	21-22
Starting current		Under 4.6A less							
Insulation resistance		10MΩ or more(500V megger)							
Dielectric strength		AC 1500V 1 minute							

MODEL		LGH-150RX5-E					
Heat exchange system		Air-to-air total heat exchange(sensible heat + latent heat exchange)					
Heat exchange element material		Partition・spacing plate-special treated paper					
Cladding		Galvanized steel sheet					
Heat insulating material		Self-extinguishing urethane foam					
Motor		Totally enclosed capacitor permanent split-phase induction motor.4 poles,4 units					
Blower		245mm dia. Centrifugal fan					
Filter material		Non-woven fabrics filter(Gravitational method 82%, EU-G3)					
Applicable air condition of setting environment		The setting air condition shall be between -10℃ to 40℃, 80%RH or less.					
Applicable air condition range of outdoor and indoor		OA temperature shall be -15℃ to +40℃, 80%RH, or less,with general air conditioning room environment.					
Functions		Lossnay ventilation/Bypass ventilation High(Extra high)-Low switching					
Weight		105kg					
Frequency/ Power source		50Hz/Single phase 220-240V					
Ventilation mode		Lossnay ventilation			Bypass ventilation		
Fan speed		Extra high	High	Low	Extra high	High	Low
Current	(A)	3.5-3.5	3.2-3.2	2.9-2.9	3.5-3.5	3.2-3.2	2.9-2.9
Power consumption	(W)	760-830	690-740	630-680	765-835	695-745	635-685
Air volume	(m^3/h)	1500	1500	1300	1500	1500	1300
	(L/s)	417	417	361	417	417	361
External static pressure	(mmH_2O)	16.3-17.8	13.3-13.8	9.7-10.2	16.3-17.8	13.3-13.8	9.7-10.2
	(Pa)	160-175	130-135	95-100	160-175	130-135	95-100
Temperature exchange efficiency (%)		80.0	80.0	81.0	–	–	–
Enthalpy exchange efficiency (%)	Heating	72.0	72.0	72.5	–	–	–
	Cooling	70.5	70.5	71.5	–	–	–
Noise (dB)	Measured at 1.5m under the center of panel in an anechoic chamber	38-39	36-37.5	33.5-35	39-40.5	37.5-39	35.5-37
Starting current		Under 7.3A less					
Insulation resistance		10MΩ or more(500V megger)					
Dielectric strength		AC 1500V 1 minute					

MODEL		LGH-200RX5-E					
Heat exchange system		Air-to-air total heat exchange(sensible heat + latent heat exchange)					
Heat exchange element material		Partition・spacing plate-special treated paper					
Cladding		Galvanized steel sheet					
Heat insulating material		Self-extinguishing urethane foam					
Motor		Totally enclosed capacitor permanent split-phase induction motor.4 poles,4 units					
Blower		245mm dia. Centrifugal fan					
Filter material		Non-woven fabrics filter(Gravitational method 82%, EU-G3)					
Applicable air condition of setting environment		The setting air condition shall be between -10℃ to 40℃, 80%RH or less.					
Applicable air condition range of outdoor and indoor		OA temperature shall be -15℃ to +40℃, 80%RH, or less,with general air conditioning room environment.					
Functions		Lossnay ventilation/Bypass ventilation High(Extra high)-Low switching					
Weight		118kg					
Frequency/ Power source		50Hz/Single phase 220-240V					
Ventilation mode		Lossnay ventilation			Bypass ventilation		
Fan speed		Extra high	High	Low	Extra high	High	Low
Current	(A)	4.8-4.8	4.2-4.2	3.4-3.4	4.8-4.8	4.2-4.2	3.4-3.4
Power consumption	(W)	1035-1100	910-980	715-785	1040-1110	915-980	720-785
Air volume	(m^3/h)	2000	2000	1580	2000	2000	1580
	(L/s)	556	556	439	556	556	439
External static pressure	(mmH_2O)	16.3-16.8	10.2-10.7	6.1-6.6	16.3-16.8	10.2-10.7	6.1-6.6
	(Pa)	160-165	100-105	60-65	160-165	100-105	60-65
Temperature exchange efficiency (%)		80.0	80.0	83.0	–	–	–
Enthalpy exchange efficiency (%)	Heating	72.5	72.5	73.5	–	–	–
	Cooling	71.0	71.0	72.0	–	–	–
Noise (dB)	Measured at 1.5m under the center of panel in an anechoic chamber	39.5-40	37-38	32.5-34	40.5-41	38-39	33.5-35
Starting current		Under 11.9A less					
Insulation resistance		10MΩ or more(500V megger)					
Dielectric strength		AC 1500V 1 minute					

Model	PZ-60DR-E
Power supply requirement	10 to 15V DC(Supplied from Lossnay unit)
Control signal	Serial signal communication
Transmission cable	Non polarized 2-wire PVC ϕ0.65~ϕ1.2 or 0.3-1.25mm^2
Total wiring length	500m maximum
Number of controllable Lossnay units	15 Lossnay units maximum (Max 2 remote controllers installable)
Environmental condition	Temperature:0 to 40℃ Humidity:30% to 80% relative humidity (no condensation)
Weight	0.2kg
Color	Munsell 6.4Y8.9/0.4

3. Outside dimensions

LGH-15RX5-E

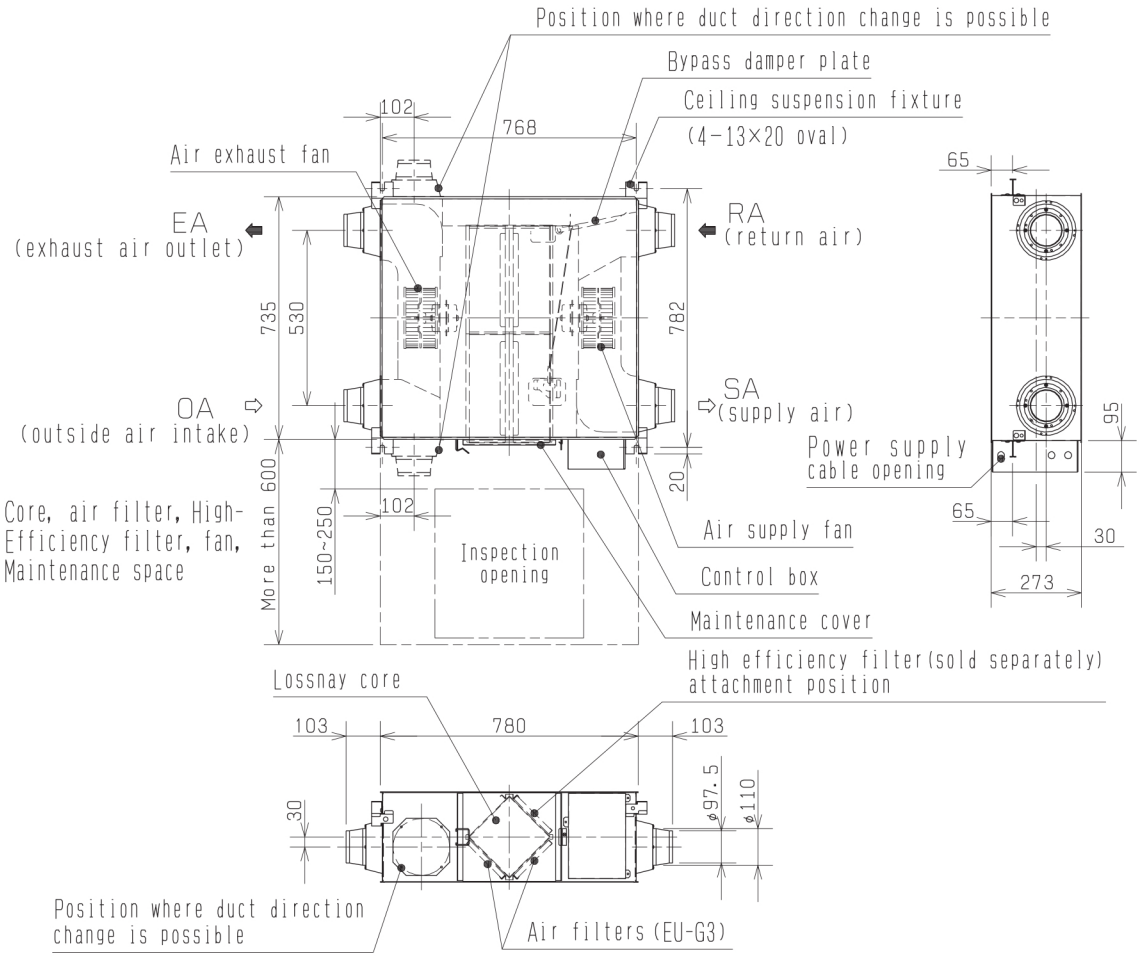

Attention

1. When using the product where it is exposed to high temperatures and humidity (40℃ or higher, RH 80% or higher), or where fog occurs frequently, moisture is likely to condense in the core, and may result in condensation build up in the unit. The product should not be used under such conditions.
2. Outdoor air may enter the Lossnay owing to the pressure difference between indoor and outdoor or external winds even when the product is not operated. It is recommended to install an Electrically operated damper to block the outdoor air.
3. In a cold weather area, an area with strong external winds or where fog occurs frequently, cold outdoor air, external winds or fog may be introduced into the product when its operation is stopped.
   It is recommended to install an Electrically operated damper.
4. In a cold weather area, or others, dewing or freezing could occur on the main unit, where the duct is connect-ed, or other sections, depending on the conditions of outdoor air and indoor temperature and moisture, even if they are within the range of operating conditions. Make sure to confirm the operating conditions and other precautions, and do not use the product if dewing or freezing is anticipated.
5. The outside ducts must be tilted at a gradient (1/30 or more) down toward the outdoor louvres from Lossnay, and properly insulated.
   (The entry of rain water may cause power leakage, fire, or damage to household property)
6. The two outdoor ducts must be covered with heat-insulating material in order to prevent condensation from forming.
   If it is expected that the ambient temperature around the place where the Lossnay unit is installed will be high during the summer air conditioning season, it is recommended that the indoor ductwork be covered with insulation material.
7. Inspection opening (450×450 or 600×600mm) must be installed on the filter and Lossnay core removing side.

※Specifications may be subject to change without notice.

Unit (mm)

LGH-25RX5-E

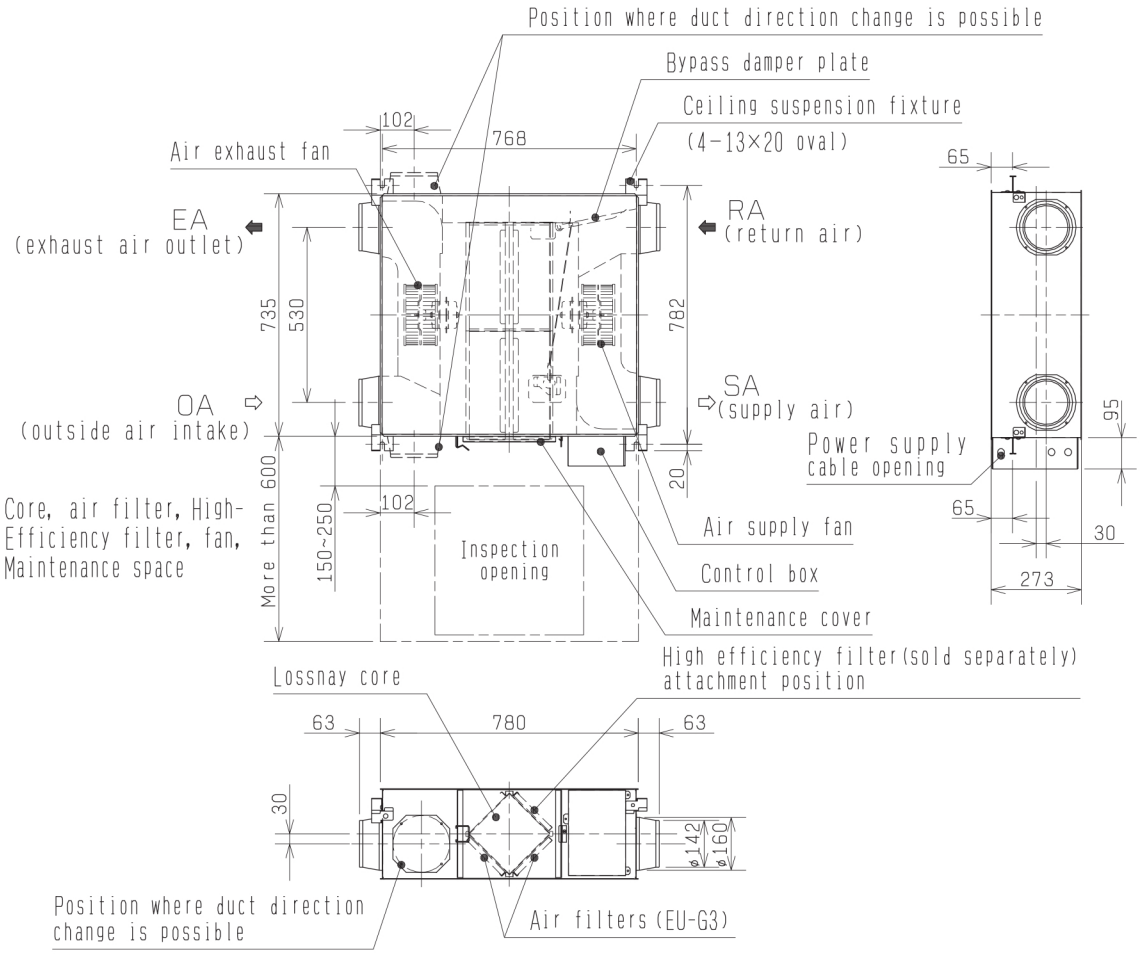

Attention

1. When using the product where it is exposed to high temperatures and humidity (40℃ or higher, RH 80% or higher), or where fog occurs frequently, moisture is likely to condense in the core, and may result in condensation build up in the unit. The product should not be used under such conditions.
2. Outdoor air may enter the Lossnay owing to the pressure difference between indoor and outdoor or external winds even when the product is not operated. It is recommended to install an Electrically operated damper to block the outdoor air.
3. In a cold weather area, an area with strong external winds or where fog occurs frequently, cold outdoor air, external winds or fog may be introduced into the product when its operation is stopped.
   It is recommended to install an Electrically operated damper.
4. In a cold weather area, or others, dewing or freezing could occur on the main unit, where the duct is connect-ed, or other sections, depending on the conditions of outdoor air and indoor temperature and moisture, even if they are within the range of operating conditions. Make sure to confirm the operating conditions and other precautions, and do not use the product if dewing or freezing is anticipated.
5. The outside ducts must be tilted at a gradient (1/30 or more) down toward the outdoor louvres from Lossnay, and properly insulated.
   (The entry of rain water may cause power leakage, fire, or damage to household property)
6. The two outdoor ducts must be covered with heat-insulating material in order to prevent condensation from forming.
   If it is expected that the ambient temperature around the place where the Lossnay unit is installed will be high during the summer air conditioning season, it is recommended that the indoor ductwork be covered with insulation material.
7. Inspection opening (450×450 or 600×600mm) must be installed on the filter and Lossnay core removing side.

※Specifications may be subject to change without notice.

Unit (mm)

LGH-35RX5-E

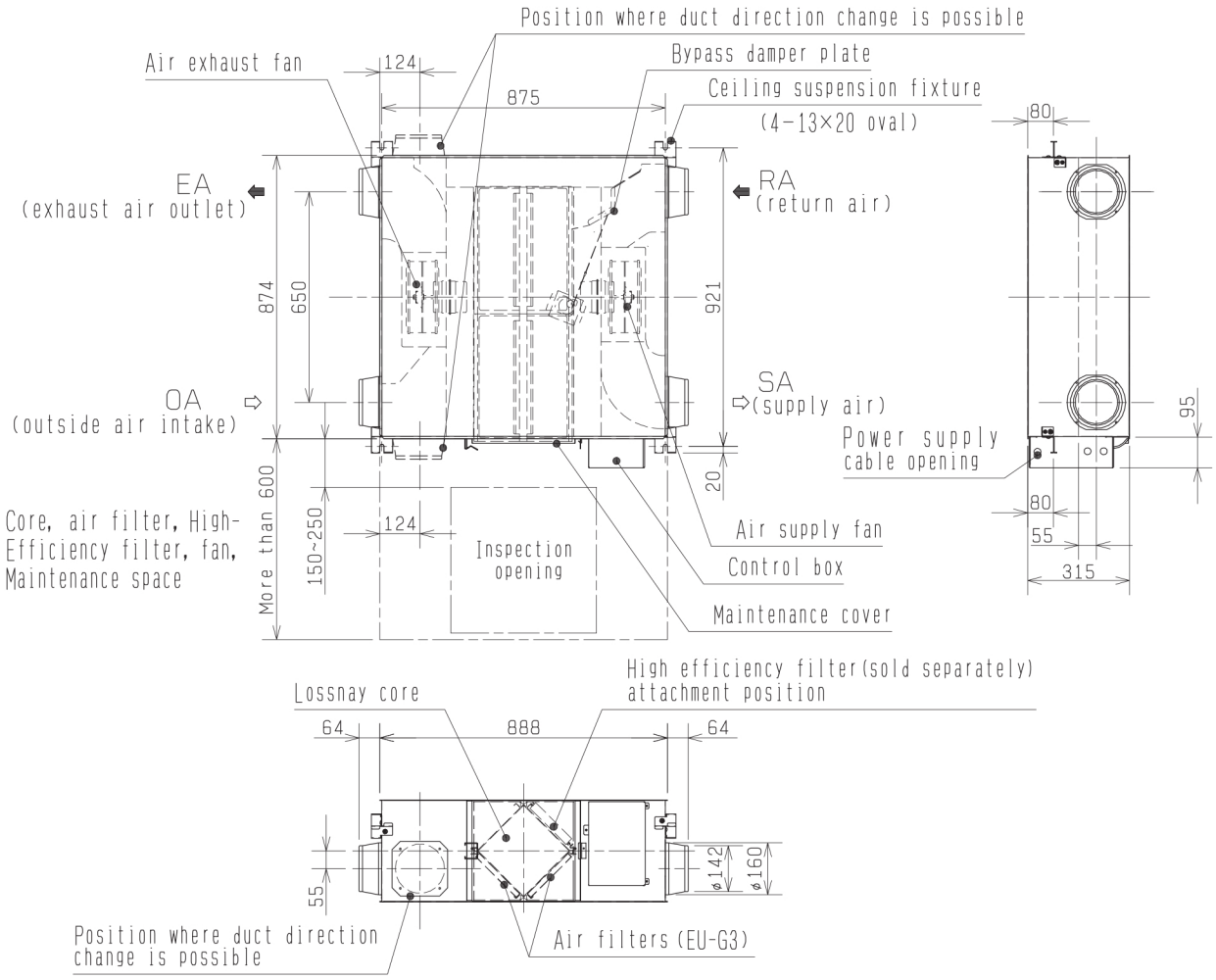

Attention

1. When using the product where it is exposed to high temperatures and humidity (40℃ or higher, RH 80% or higher), or where fog occurs frequently, moisture is likely to condense in the core, and may result in condensation build up in the unit. The product should not be used under such conditions.
2. Outdoor air may enter the Lossnay owing to the pressure difference between indoor and outdoor or external winds even when the product is not operated. It is recommended to install an Electrically operated damper to block the outdoor air.
3. In a cold weather area, an area with strong external winds or where fog occurs frequently, cold outdoor air, external winds or fog may be introduced into the product when its operation is stopped. It is recommended to install an Electrically operated damper.
4. In a cold weather area, or others, dewing or freezing could occur on the main unit, where the duct is connect-ed, or other sections, depending on the conditions of outdoor air and indoor temperature and moisture, even if they are within the range of operating conditions. Make sure to confirm the operating conditions and other precautions, and do not use the product if dewing or freezing is anticipated.
5. The outside ducts must be tilted at a gradient (1/30 or more) down toward the outdoor louvres from Lossnay, and properly insulated. (The entry of rain water may cause power leakage, fire, or damage to household property)
6. The two outdoor ducts must be covered with heat-insulating material in order to prevent condensation from forming. If it is expected that the ambient temperature around the place where the Lossnay unit is installed will be high during the summer air conditioning season, it is recommended that the indoor ductwork be covered with insulation material.
7. Inspection opening (450×450 or 600×600mm) must be installed on the filter and Lossnay core removing side.

※Specifications may be subject to change without notice.

Unit (mm)

LGH-50RX5-E

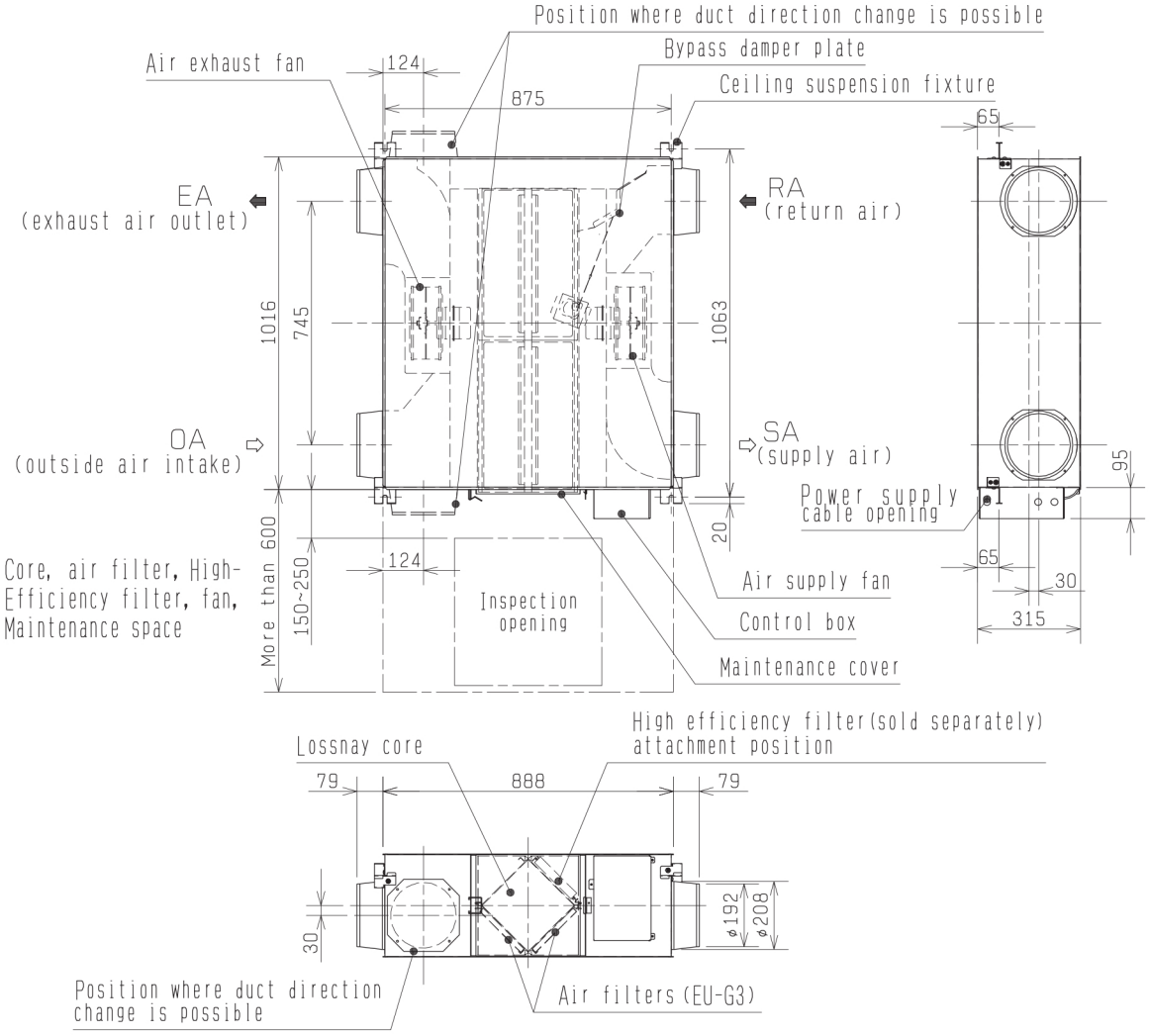

Attention

1. When using the product where it is exposed to high temperatures and humidity (40℃ or higher, RH 80% or higher), or where fog occurs frequently, moisture is likely to condense in the core, and may result in condensation build up in the unit. The product should not be used under such conditions.
2. Outdoor air may enter the Lossnay owing to the pressure difference between indoor and outdoor or external winds even when the product is not operated. It is recommended to install an Electrically operated damper to block the outdoor air.
3. In a cold weather area, an area with strong external winds or where fog occurs frequently, cold outdoor air, external winds or fog may be introduced into the product when its operation is stopped.
   It is recommended to install an Electrically operated damper.
4. When using the product in an environment where there is a window, or opening near the outdoor louvre , where insects are likely to gather around the interior or exterior light, take note that small insects may intrude into the product.
5. In a cold weather area, or others, dewing or freezing could occur on the main unit, where the duct is connect-ed, or other sections, depending on the conditions of outdoor air and indoor temperature and moisture, even if they are within the range of operating conditions. Make sure to confirm the operating conditions and other precautions, and do not use the product if dewing or freezing is anticipated.
6. The outside ducts must be tilted at a gradient (1/30 or more) down toward the outdoor louvres from Lossnay, and properly insulated.
   (The entry of rain water may cause power leakage, fire, or damage to household property)
7. The two outdoor ducts must be covered with heat-insulating material in order to prevent condensation from forming.
   If it is expected that the ambient temperature around the place where the Lossnay unit is installed will be high during the summer air conditioning season, it is recommended that the indoor ductwork be covered with insulation material.
8. Inspection opening (450×450 or 600×600mm) must be installed on the filter and Lossnay core removing side.

※Specifications may be subject to change without notice.

Unit (mm)

LGH-65RX5-E

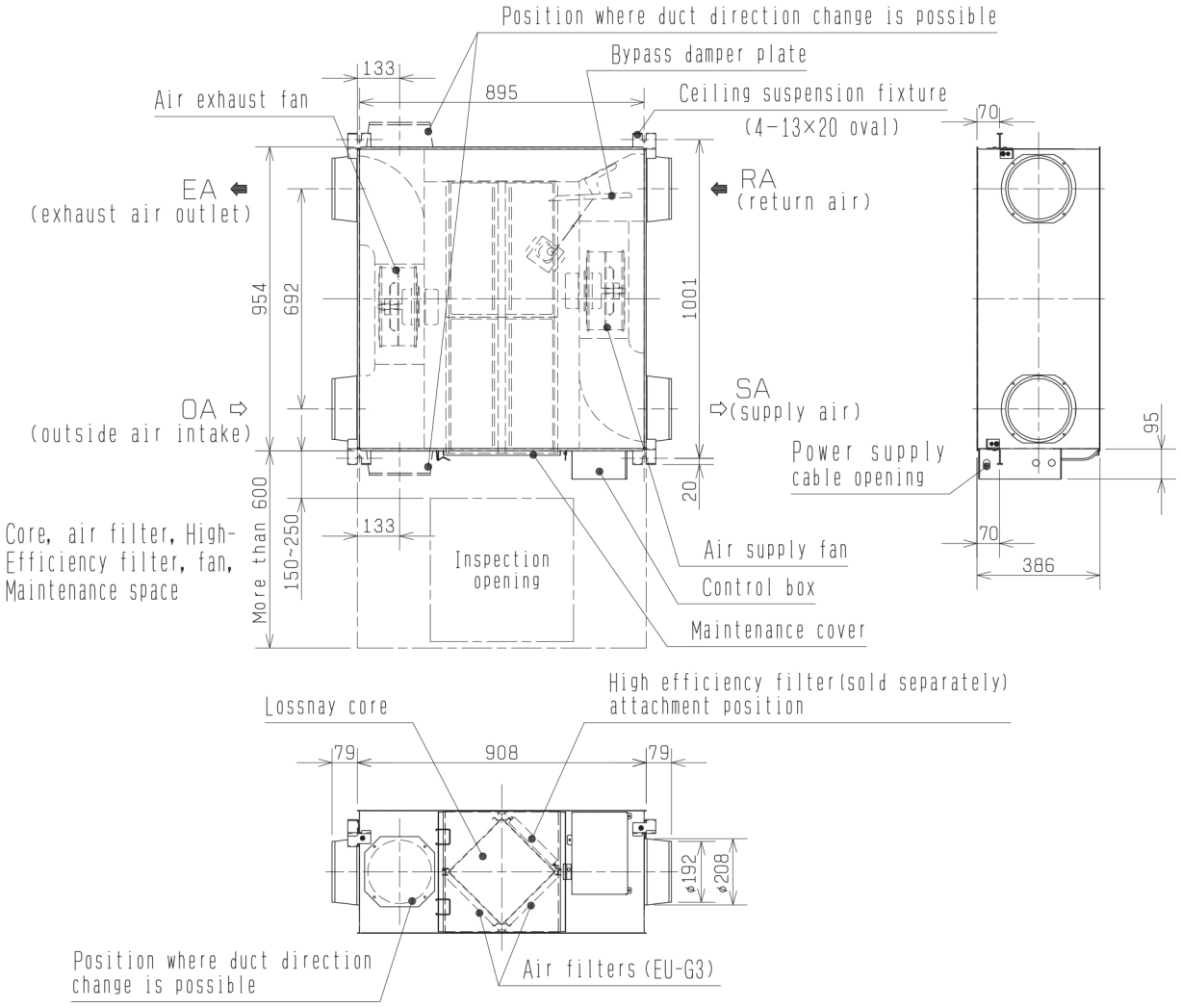

Attention

1. When using the product where it is exposed to high temperatures and humidity (40℃ or higher, RH 80% or higher), or where fog occurs frequently, moisture is likely to condense in the core, and may result in condensation build up in the unit. The product should not be used under such conditions.
2. Outdoor air may enter the Lossnay owing to the pressure difference between indoor and outdoor or external winds even when the product is not operated. It is recommended to install an Electrically operated damper to block the outdoor air.
3. In a cold weather area, an area with strong external winds or where fog occurs frequently, cold outdoor air, external winds or fog may be introduced into the product when its operation is stopped. It is recommended to install an Electrically operated damper.
4. In a cold weather area, or others, dewing or freezing could occur on the main unit, where the duct is connect-ed, or other sections, depending on the conditions of outdoor air and indoor temperature and moisture, even if they are within the range of operating conditions. Make sure to confirm the operating conditions and other precautions, and do not use the product if dewing or freezing is anticipated.
5. The outside ducts must be tilted at a gradient (1/30 or more) down toward the outdoor louvres from Lossnay, and properly insulated. (The entry of rain water may cause power leakage, fire, or damage to household property)
6. The two outdoor ducts must be covered with heat-insulating material in order to prevent condensation from forming. If it is expected that the ambient temperature around the place where the Lossnay unit is installed will be high during the summer air conditioning season, it is recommended that the indoor ductwork be covered with insulation material.
7. Inspection opening (450×450 or 600×600mm) must be installed on the filter and Lossnay core removing side.

※Specifications may be subject to change without notice.

Unit (mm)

LGH-80RX5-E

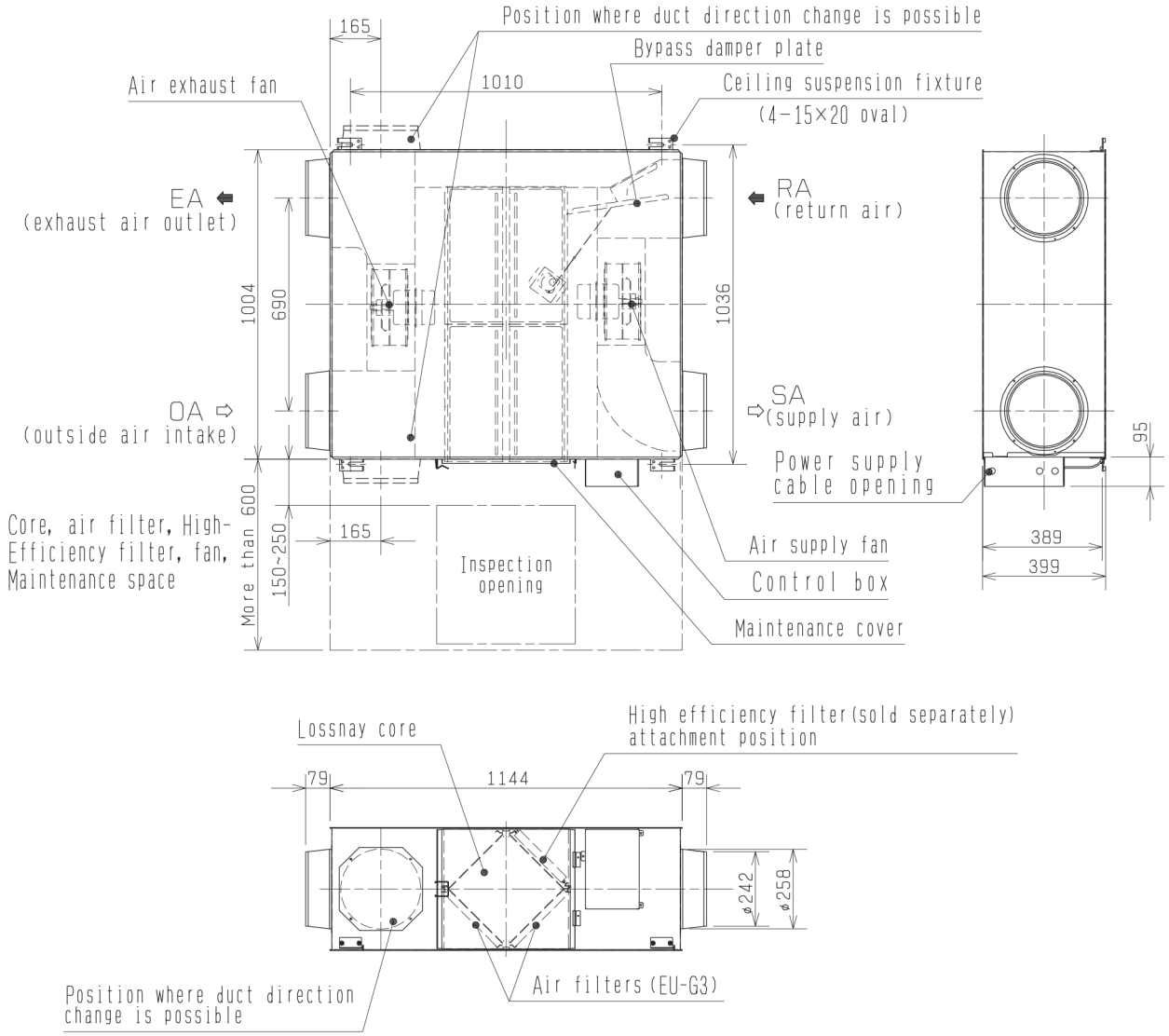

Attention

1. When using the product where it is exposed to high temperatures and humidity (40℃ or higher, RH 80% or higher), or where fog occurs frequently, moisture is likely to condense in the core, and may result in condensation build up in the unit. The product should not be used under such conditions.
2. Outdoor air may enter the Lossnay owing to the pressure difference between indoor and outdoor or external winds even when the product is not operated. It is recommended to install an Electrically operated damper to block the outdoor air.
3. In a cold weather area, an area with strong external winds or where fog occurs frequently, cold outdoor air, external winds or fog may be introduced into the product when its operation is stopped. It is recommended to install an Electrically operated damper.
4. In a cold weather area, or others, dewing or freezing could occur on the main unit, where the duct is connect-ed, or other sections, depending on the conditions of outdoor air and indoor temperature and moisture, even if they are within the range of operating conditions. Make sure to confirm the operating conditions and other precautions, and do not use the product if dewing or freezing is anticipated.
5. The outside ducts must be tilted at a gradient (1/30 or more) down toward the outdoor louvres from Lossnay, and properly insulated.
   (The entry of rain water may cause power leakage, fire, or damage to household property)
6. The two outdoor ducts must be covered with heat-insulating material in order to prevent condensation from forming.
   If it is expected that the ambient temperature around the place where the Lossnay unit is installed will be high during the summer air conditioning season, it is recommended that the indoor ductwork be covered with insulation material.
7. Inspection opening (450×450 or 600×600mm) must be installed on the filter and Lossnay core removing side.

※Specifications may be subject to change without notice.

Unit (mm)

LGH-100RX5-E

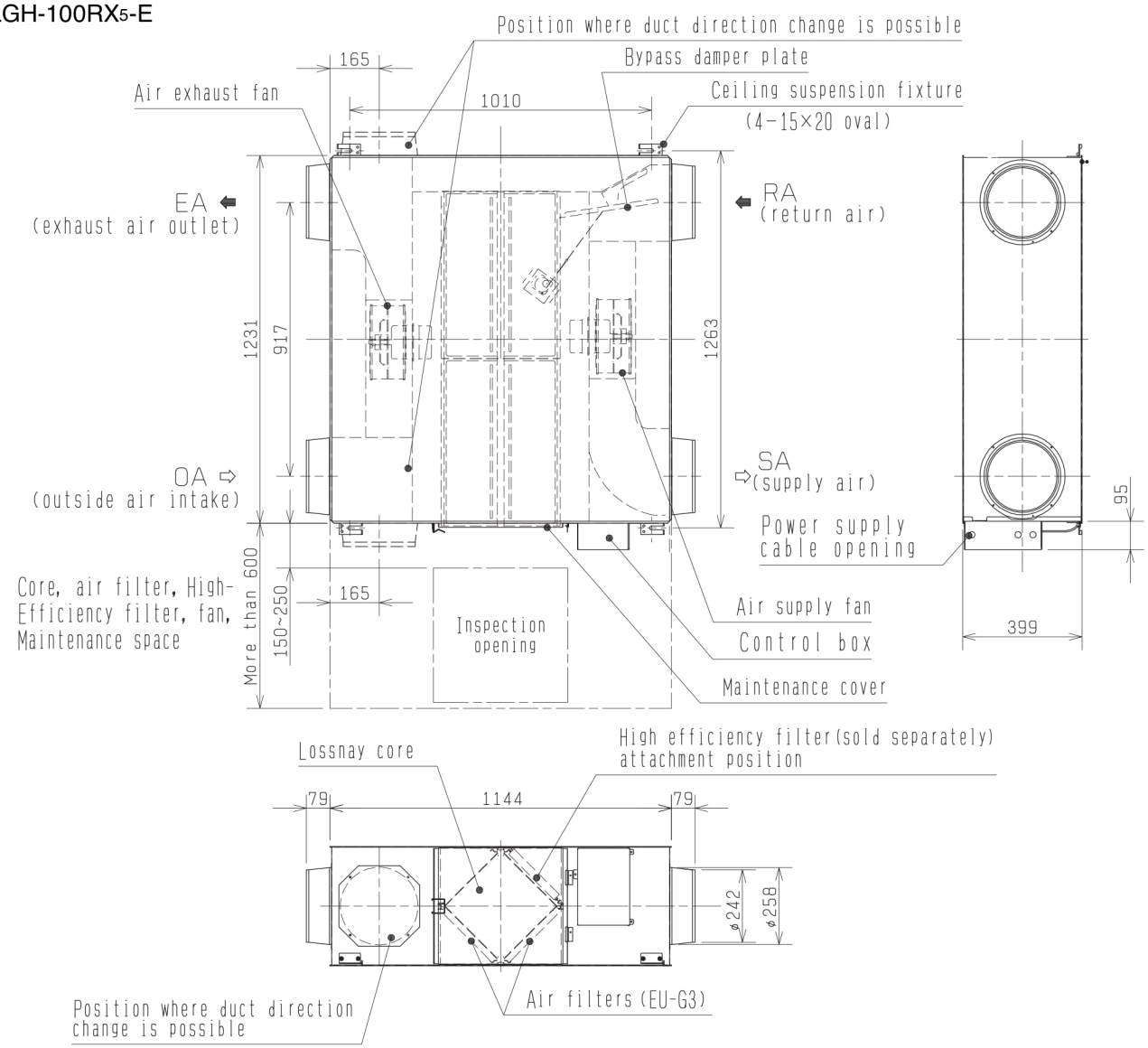

Attention

1. When using the product where it is exposed to high temperatures and humidity (40℃ or higher, RH 80% or higher), or where fog occurs frequently, moisture is likely to condense in the core, and may result in condensation build up in the unit. The product should not be used under such conditions.
2. Outdoor air may enter the Lossnay owing to the pressure difference between indoor and outdoor or external winds even when the product is not operated. It is recommended to install an Electrically operated damper to block the outdoor air.
3. In a cold weather area, an area with strong external winds or where fog occurs frequently, cold outdoor air, external winds or fog may be introduced into the product when its operation is stopped.
   It is recommended to install an Electrically operated damper.
4. In a cold weather area, or others, dewing or freezing could occur on the main unit, where the duct is connect-ed, or other sections, depending on the conditions of outdoor air and indoor temperature and moisture, even if they are within the range of operating conditions. Make sure to confirm the operating conditions and other precautions, and do not use the product if dewing or freezing is anticipated.
5. The outside ducts must be tilted at a gradient (1/30 or more) down toward the outdoor louvres from Lossnay, and properly insulated.
   (The entry of rain water may cause power leakage, fire, or damage to household property)
6. The two outdoor ducts must be covered with heat-insulating material in order to prevent condensation from forming.
   If it is expected that the ambient temperature around the place where the Lossnay unit is installed will be high during the summer air conditioning season, it is recommended that the indoor ductwork be covered with insulation material.
7. Inspection opening (450×450 or 600×600mm) must be installed on the filter and Lossnay core removing side.

※Specifications may be subject to change without notice.

Unit (mm)

LGH-150RX5-E

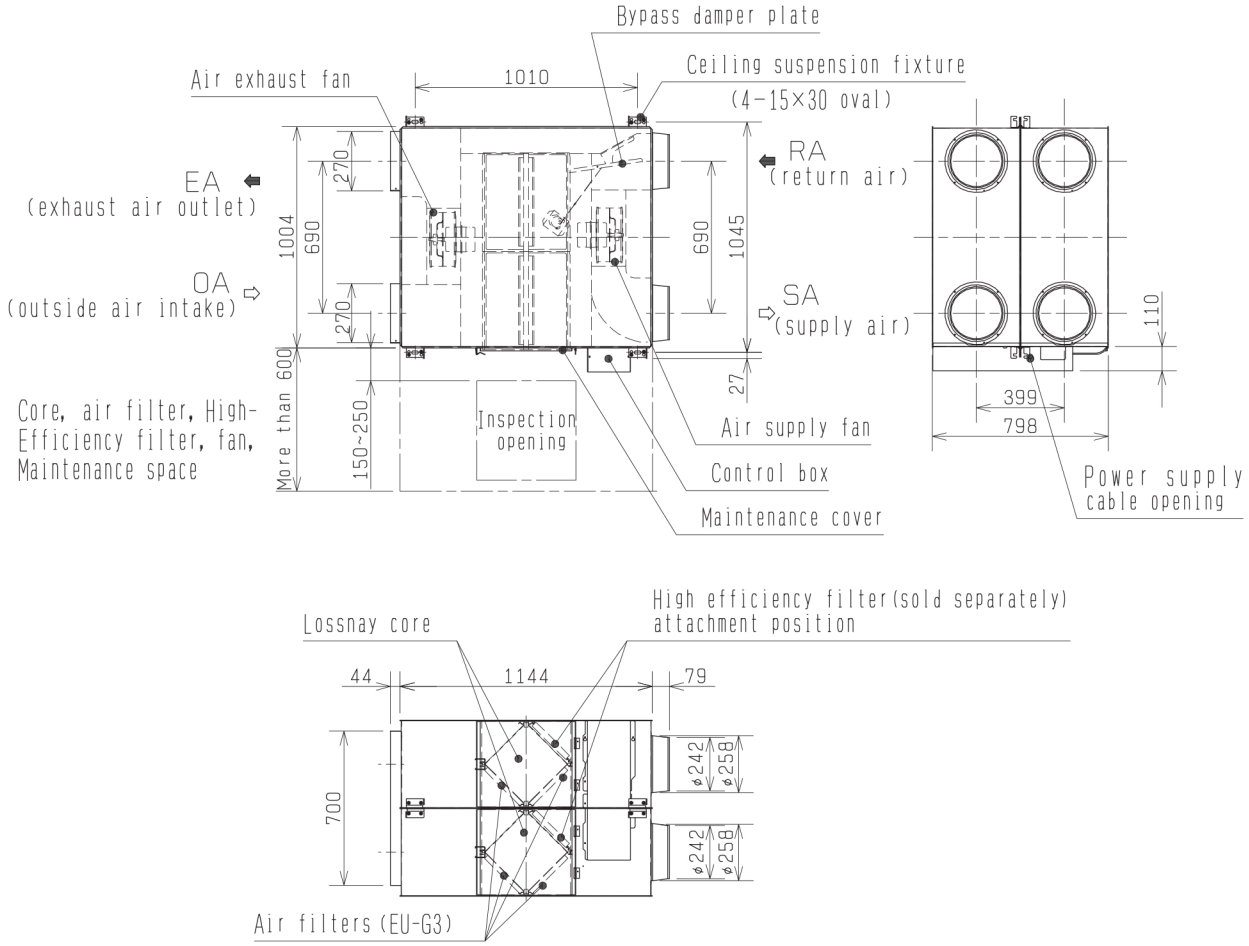

Attention

1. When using the product where it is exposed to high temperatures and humidity (40℃ or higher, RH 80% or higher), or where fog occurs frequently, moisture is likely to condense in the core, and may result in condensation build up in the unit. The product should not be used under such conditions.
2. Outdoor air may enter the Lossnay owing to the pressure difference between indoor and outdoor or external winds even when the product is not operated. It is recommended to install an Electrically operated damper to block the outdoor air.
3. In a cold weather area, an area with strong external winds or where fog occurs frequently, cold outdoor air, external winds or fog may be introduced into the product when its operation is stopped. It is recommended to install an Electrically operated damper.
4. In a cold weather area, or others, dewing or freezing could occur on the main unit, where the duct is connect-ed, or other sections, depending on the conditions of outdoor air and indoor temperature and moisture, even if they are within the range of operating conditions. Make sure to confirm the operating conditions and other precautions, and do not use the product if dewing or freezing is anticipated.
5. The outside ducts must be tilted at a gradient (1/30 or more) down toward the outdoor louvres from Lossnay, and properly insulated.
   (The entry of rain water may cause power leakage, fire, or damage to household property)
6. The two outdoor ducts must be covered with heat-insulating material in order to prevent condensation from forming.
   If it is expected that the ambient temperature around the place where the Lossnay unit is installed will be high during the summer air conditioning season, it is recommended that the indoor ductwork be covered with insulation material.
7. Inspection opening (450×450 or 600×600mm) must be installed on the filter and Lossnay core removing side.

※Specifications may be subject to change without notice.

Unit (mm)

LGH-200RX5-E

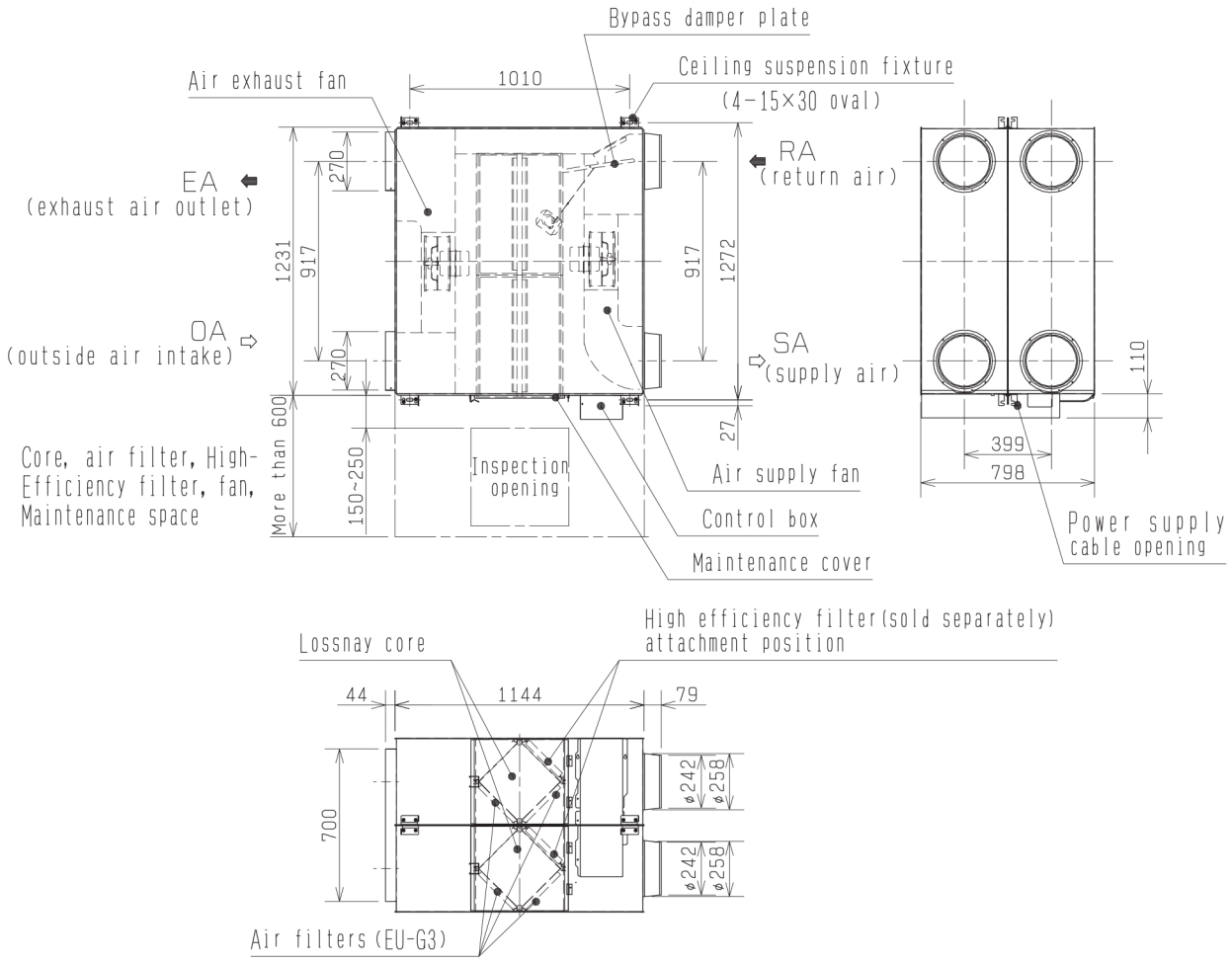

Attention

1. When using the product where it is exposed to high temperatures and humidity (40℃ or higher, RH 80% or higher), or where fog occurs frequently, moisture is likely to condense in the core, and may result in condensation build up in the unit. The product should not be used under such conditions.
2. Outdoor air may enter the Lossnay owing to the pressure difference between indoor and outdoor or external winds even when the product is not operated. It is recommended to install an Electrically operated damper to block the outdoor air.
3. In a cold weather area, an area with strong external winds or where fog occurs frequently, cold outdoor air, external winds or fog may be introduced into the product when its operation is stopped.
   It is recommended to install an Electrically operated damper.
4. In a cold weather area, or others, dewing or freezing could occur on the main unit, where the duct is connect-ed, or other sections, depending on the conditions of outdoor air and indoor temperature and moisture, even if they are within the range of operating conditions. Make sure to confirm the operating conditions and other precautions, and do not use the product if dewing or freezing is anticipated.
5. The outside ducts must be tilted at a gradient (1/30 or more) down toward the outdoor louvres from Lossnay, and properly insulated.
   (The entry of rain water may cause power leakage, fire, or damage to household property)
6. The two outdoor ducts must be covered with heat-insulating material in order to prevent condensation from forming.
   If it is expected that the ambient temperature around the place where the Lossnay unit is installed will be high during the summer air conditioning season, it is recommended that the indoor ductwork be covered with insulation material.
7. Inspection opening (450×450 or 600×600mm) must be installed on the filter and Lossnay core removing side.

※Specifications may be subject to change without notice.

Unit (mm)

PZ-60DR-E

Install Position

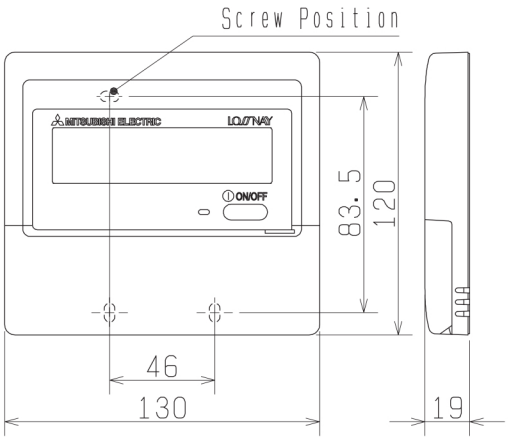

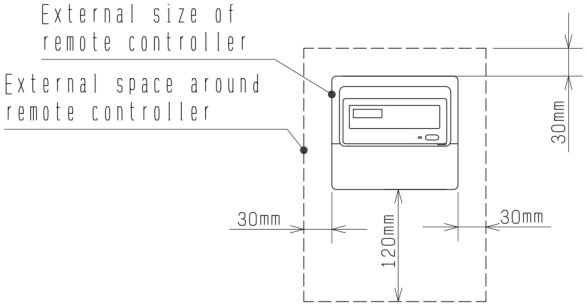

Display

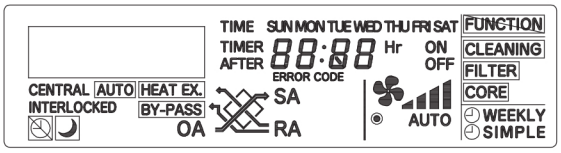

(1) Non polar transmission cable should be used (PVC insulated PVC jacketed and either between ø0.65 and ø1.2 or between 0.3mm^2 and 1.25 mm^2 in cross section)

(2) The total length of the transmission cable must be 500m or less.

Unit (mm)

PZ-25RF8-E, PZ-35RF8-E, PZ-50RF8-E, PZ-65RF8-E, PZ-80RF8-E, PZ-100RF8-E

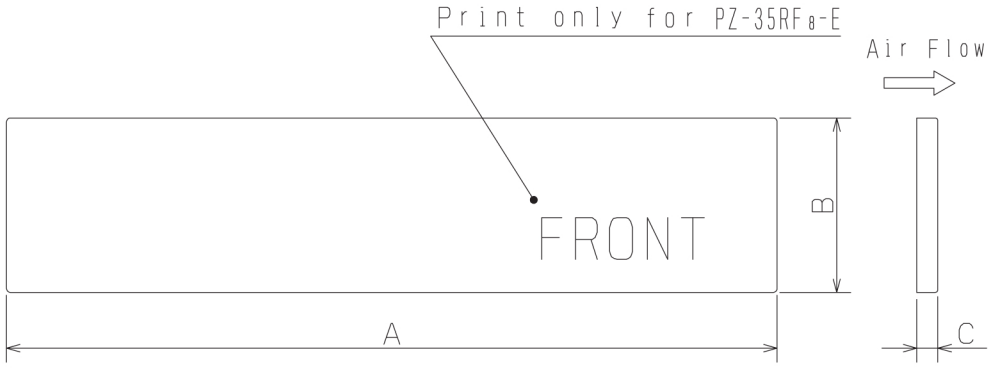

Model	Dimension (mm)			Numbers of filters per set		Applicable model
	A	B	C	Supply	Exhaust	
PZ-25RF8-E	333	156	15	2	2	LGH-15RX5-E, LGH-25RX5-E
PZ-35RF8-E	399	183	20	2	2	LGH-35RX5-E
PZ-50RF8-E	470	183	15	2	2	LGH-50RX5-E
PZ-65RF8-E	433	218	15	2	2	LGH-65RX5-E
PZ-80RF8-E	451	243	15	2	2	LGH-80RX5-E, 150RX5-E (2sets)
PZ-100RF8-E	565	243	15	2	2	LGH-100RX5-E, 200RX5-E (2sets)

Note: This is one set per main body.
(2sets for LGH-150R and 200R type)
・PZ-35RF8-E has front and back side.
Set the "FRONT" (printed) side of the filter on the outer side.

Unit (mm)

4. Electrical wiring diagrams

LGH-15RX5-E, LGH-25RX5-E, LGH-35RX5-E, LGH-50RX5-E, LGH-65RX5-E, LGH-80RX5-E, LGH-100RX5-E

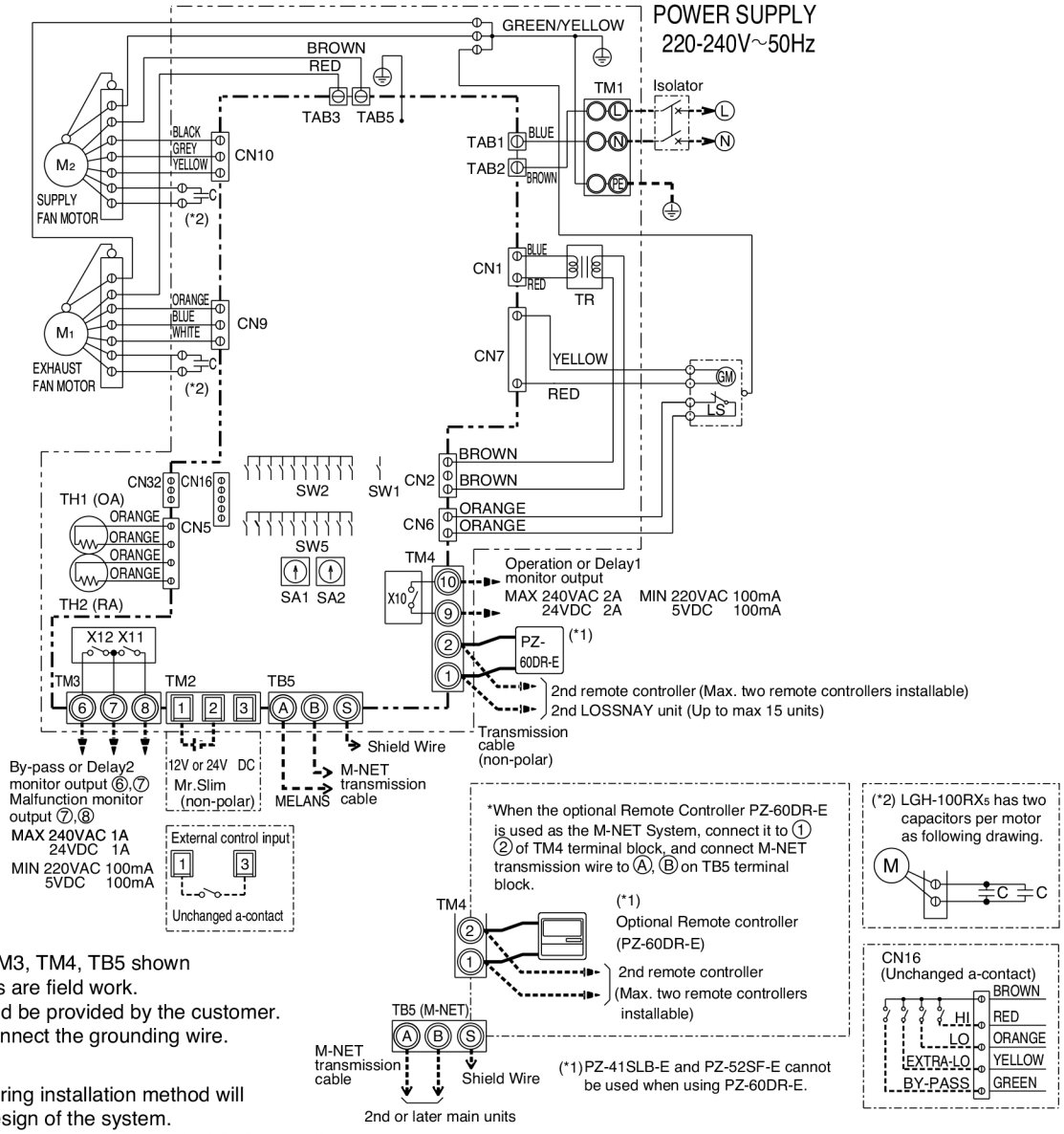

■ NOTE 1. TM1, TM2, TM3, TM4, TB5 shown in dotted lines are field work.
2. Isolator should be provided by the customer.
3. Be sure to connect the grounding wire.

*Attention

With this product, the wiring installation method will vary according to the design of the system.
Perform electrical installation to meet local electrical regulations.
- Always use double insulated PVC cable for the transmission cables.
- Wiring work must be performed by qualified professionals.
- All supply circuits must be disconnected before obtaining access to the terminal devices.

*Specifications may be subject to change without notice.

Definition of Symbols

M1:	Motor for exhaust fan	CN1:	Connector (Transformer primary)
M2:	Motor for supply fan	CN2:	Connector (Transformer secondary)
C:	Capacitor	CN5:	Connector (Thermistor)
GM:	Motor for By-pass operation	CN6:	Connector (Microswitch)
LS:	Microswitch	CN7:	Connector (Motor for By-pass operation)
TH1:	Thermistor for outside air	TAB3:	Tab connector(Fan motor)
TH2:	Thermistor for return air	TAB5:	Tab connector (Fan motor)
SW1:	Switch (Main/Sub change)	CN9:	Connector (Fan motor)
SW2, 5:	Switch (Function selection)	CN10:	Connector (Fan motor)
TM1:	Terminal block (Power supply)	CN16:	Connector (High/Low/Extra Low/By-pass switch)
TM2:	Terminal block (External control input)	CN32:	Connector (Remote control selection)
TM3:	Terminal block (Monitor output)	SA1:	Address setting rotary switch (10 digit)
TM4 :	Terminal block (Transmission cable and monitor output)	SA2:	Address setting rotary switch (1 digit)
TB5 :	Terminal block (M-NET Transmission cable)	SYMBOL	: Indicates terminal block.
TAB1,TAB2:	Connector (Power supply)		: Connector.
TR:	Control circuit transformer		: Board insertion connector or fastening connector of control board.
X10,X11,X12:	Relay contact		

LGH-150RX5-E, LGH-200RX5-E

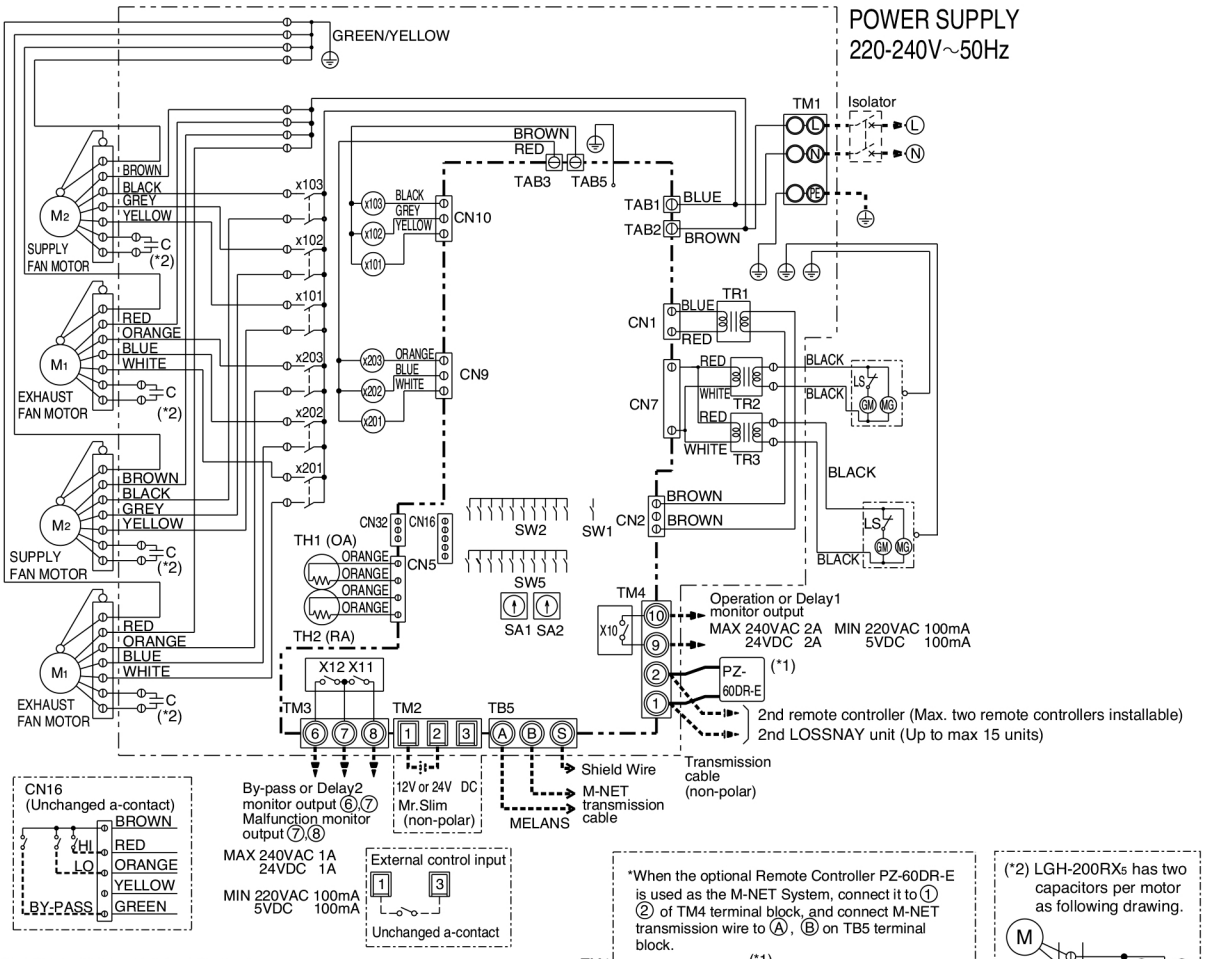

■ NOTE 1.TM1, TM2, TM3, TM4, TB5 shown in dotted lines are field work.
2.Isolator should be provided by the customer.
3.Be sure to connect the grounding wire.

*Attention

With this product, the wiring installation method will vary according to the design of the system.
Perform electrical installation to meet local electrical regulations.
·Always use double insulated PVC cable for the transmission cables.
·Wiring work must be performed by qualified professionals.
·All supply circuits must be disconnected before obtaining access to the terminal devices.

*Specifications may be subject to change without notice.

Definition of Symbols

M1:	Motor for exhaust fan
M2:	Motor for supply fan
C:	Capacitor
GM:	Motor for By-pass operation
LS:	Microswitch
TH1:	Thermistor for outside air
TH2:	Thermistor for return air
SW1:	Switch (Main/Sub change)
SW2, 5:	Switch (Function selection)
TM1:	Terminal block (Power supply)
TM2:	Terminal block(External control input)
TM3:	Terminal block (Monitor output)
TM4:	Terminal block (Transmission cable and monitor output)
TB5:	Terminal block (M-NET Transmission cable)
TAB1,TAB2:	Connector (Power supply)
TR1:	Control circuit transformer
TR2,TR3:	By-pass operation transformer
X10,X11,X12:	Relay contact
X101,X102,X103:	Relay Supply fan speed control
X201,X202,X203:	Relay Exhaust fan speed control
CN1:	Connector (Transformer primary)
CN2:	Connector (Transformer secondary)
CN5:	Connector (Thermistor)
CN6:	Connector(Microswitch)
CN7:	Connector (Motor for By-pass operation)
CN9:	Connector (Fan motor)
TAB3:	Tab connector (Fan motor)
TAB5:	Tab connector (Fan motor)
CN9:	Connector (Fan motor)
CN10:	Connector (Fan motor)
CN16:	Connector(High/Low/By-pass switch)
CN32:	Connector (Remote control selection)
SA1:	Address setting rotary switch (10 digit)
SA2:	Address setting rotary switch (1 digit)
SYMBOL	◯□ : Indicates terminal block. ⏀ Board insertion connector or fastening ⏀ connector of control board.

5. Basic circuit diagram

● Circuit board diagram and check points

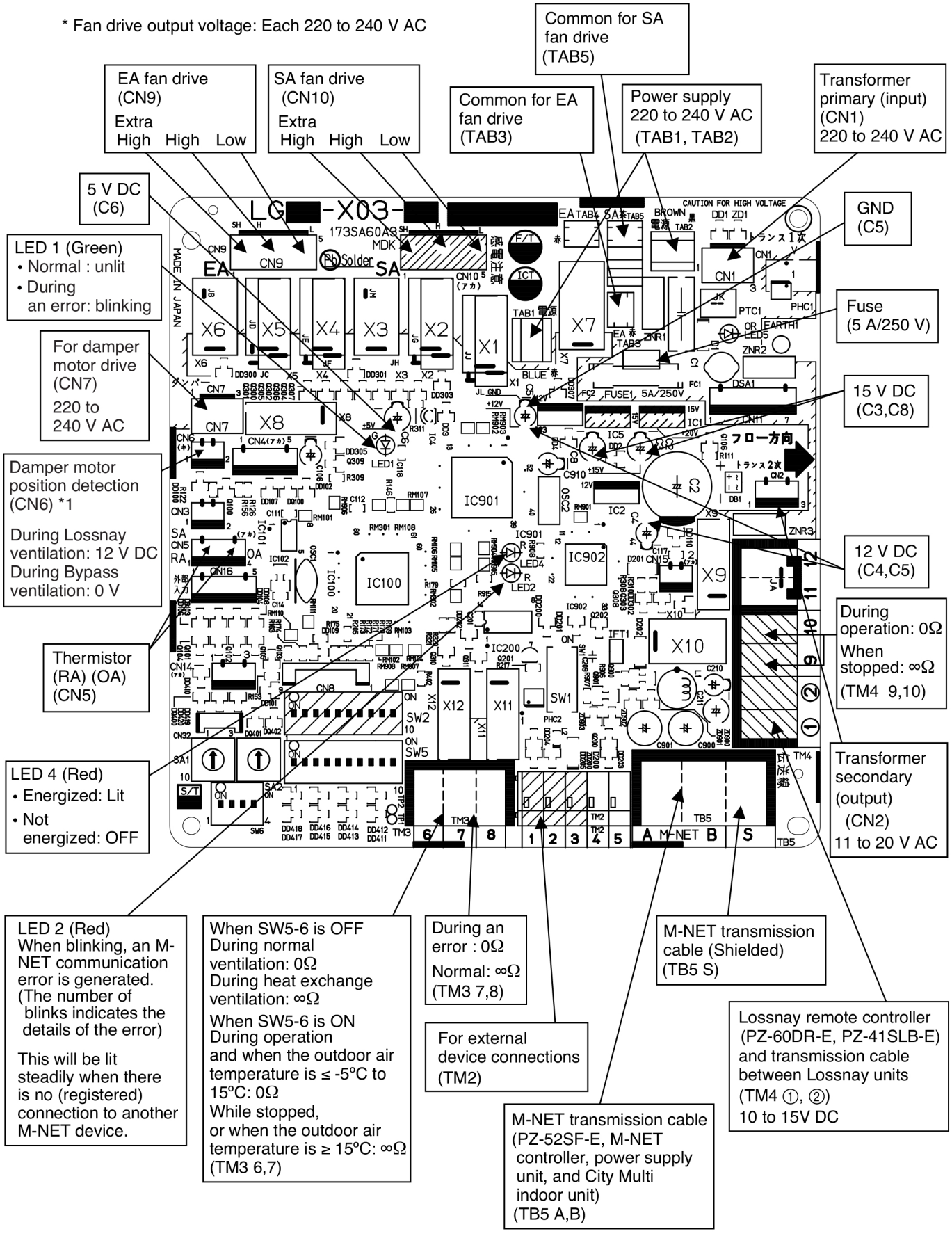

*1: Damper position detection input is only for the LGH-15 to 100 types, and not for the LGH-150 and 200 types.

6. Fundamentals of operation

● Description of the circuit operation

(1) System Configuration

Lossnay operates through the following system.

System		System Diagram	Features	Prepared Parts
Classification	Details			
Basic System — Basic System	1 Lossnay unit 1 Remote controller	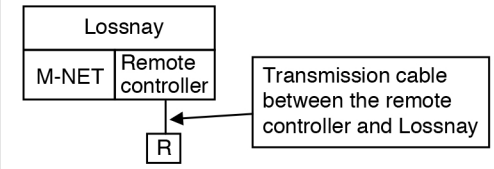 Remote controller : PZ-60DR-E or PZ-41SLB-E Transmission cable terminal blocks between Lossnay unit M-NET : M-NET transmission cable terminal block R : Remote controller (PZ-60DR-E or PZ-41SLB-E)	• One remote controller operates one Lossnay unit.	Lossnay remote controller (PZ-60DR-E, or PZ-41SLB-E)
Basic System — Two remote controllers system	1 Lossnay unit 2 Remote controllers	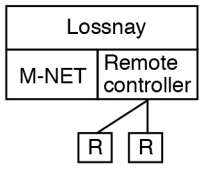	• Two remote controllers operate one Lossnay unit. (Last touch priority operation) * PZ-60DR-E and PZ-41SLB-E cannot be used together.	Lossnay remote controller (PZ-60DR-E or PZ-41SLB-E)
Basic System — Multiple units system	Multiple Lossnay units	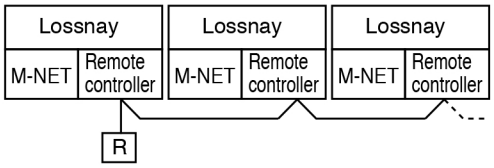 Remote controller (PZ-60DR-E,or PZ-41SLB-E)	• A maximum of 15 Lossnay units can be operated by a single remote controller. (Group operation) • All units will operate in the same mode.	Lossnay remote controller (PZ-60DR-E or PZ-41SLB-E)
Basic System — Systems interlocked with external device (air conditioning units)	Level signal output device (other manufacturer's PAC, etc.) or pulse signal output device (building control system, etc.)	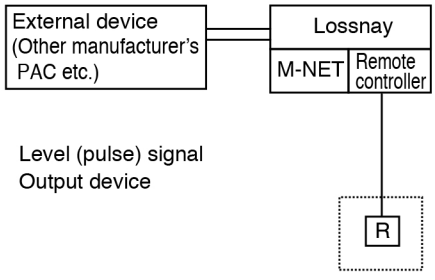 Remote controller (PZ-60DR-E, or PZ-41SLB-E) (Operation without a remote controller is also possible.)	• Lossnay is started/stopped by a signal (*1) from an external device. • Having a remote control permits last touch priority operation with the external device and the remote controller. • A maximum of 15 Lossnay units can be operated. *1: An uncharged a-contact, 12 V DC or 24 V DC level signal, or an uncharged a-contact, 12 V DC or 24 V DC pulse signal.	—
	Mr. Slim (A-control or K-control remote controller)	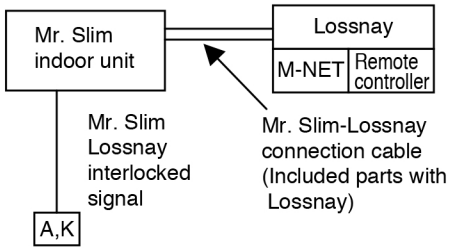 A-control or K-control remote controller	• Lossnay can be started/stopped by an A-control remote controller or a K-control remote controller. • Lossnay High or Low fan speed can be selected from the A-control remote controller. • Lossnay stand-alone operation is permitted from the A-control remote controller. * Neither PZ-60DR-E nor PZ-41SLB-E can be used.	—

System		System Diagram	Features	Prepared Parts
Classification	Details			
M- NET Control Systems interlocked with external device (air conditioning units)	Mitsubishi City Multi air conditioner (MA remote controller or ME remote controller)	When using PZ-60DR-E 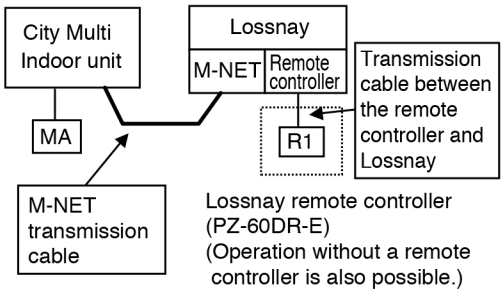 When using PZ-52SF-E 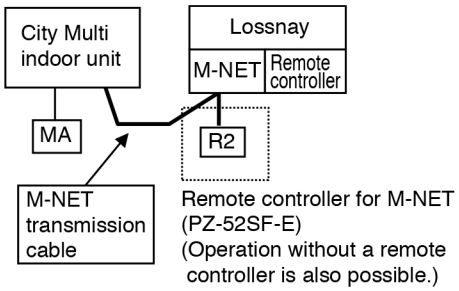 Remote controller : Terminal block for transmission cable between PZ-60DR-E and Lossnay M-NET : M-NET transmission cable terminal block R1 : PZ-60DR-E R2 : PZ-52SF-E	• Can be interlocked with a maximum of 16 air conditioning units. • Lossnay can be started/stopped, and switched between High and Low fan speed by an air conditioner remote controller. • Lossnay stand-alone operation is permitted from an air conditioner remote controller. • Having PZ-60DR-E or PZ-52SF-E, last touch priority operation is permitted with the air conditioner remote controller and the Lossnay remote controller. *1: PZ-41SLB-E cannot be used in this system. *2: PZ-60DR-E and PZ-52SF-E cannot be used together.	—
	Central control system for Lossnay only	Central/independent control of multiple Lossnay units	When using PZ-60DR-E 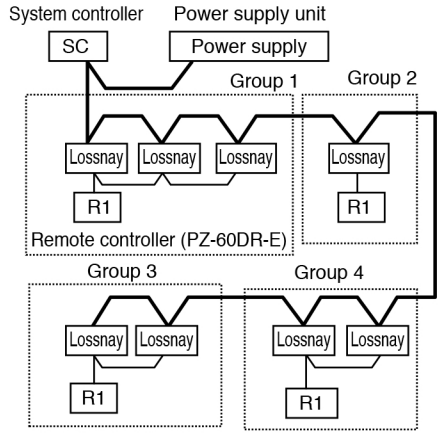 When using PZ-52SF-E 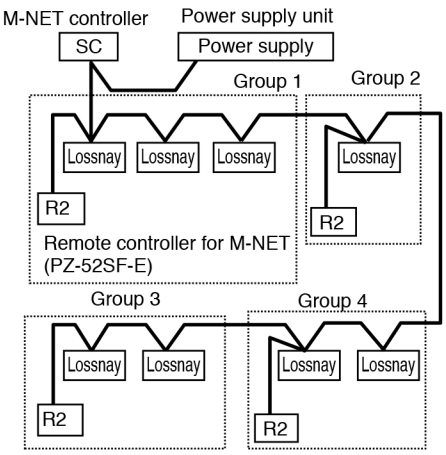	• Lossnay batch/independent (group) control permitted by system controller. • Operation of Lossnay within a group is permitted by a Lossnay remote controller. (PZ-60DR-E or PZ-52SF-E) • One group of a maximum of 16 Lossnay units can be operated. • Number of Lossnay control units Centralized controller (AG-150A) : 50 units/50 groups ON/OFF remote controller (PAC-YT40ANRA) : 50 units/16 groups System remote controller (PAC-SF44SRA) : 50 units/50 groups *1: The remote controller (PZ-41SLB-E) cannot be used in this system. *2: PZ-60DR-E and PZ-52SF-E cannot be used together.	• Lossnay remote controller (PZ-60DR-E or PZ-52SF-E) • Centralized controllers (G-50A), (PAC-SF44SRA), (PAC-YT40ANRA), and (AG-150A) • Power supply units (PAC-SC50KUA), (PAC-SF46EPA), and (PAC-SC51KUA)

* Refer to the technical documentation for details about M-NET system design.

● Remote controller list

① Remote controllers

Rough Classification	Fine Classification	Product	Model
For Lossnay independent control		Lossnay remote controller	PZ-60DR-E
			PZ-41SLB-E
For Lossnay M-NET control		Lossnay remote controller	PZ-52SF-E
M-NET For City Multi air conditioner	MA remote controller	MA remote controller	PAR-20/21MAA
		Wireless remote controller	PAR-FA(FL)31MA
		Compact remote controller	PAC-YT51CRA
	M-NET remote controller	ME remote controller	PAR-F27MEA
		Compact remote controller	PAC-SE51CRA
For Mr. Slim		A-control remote controller	PAR-21MAA
		K-control remote controller	

② System controller

Classification	Product	Model
System controller	Schedule timer	PAC-YT34STA
	Group remote controller	PAC-SC30GRA
	ON/OFF remote controller	PAC-YT40ANRA
	System remote controller	PAC-SF44SRA
	Centralized controller	G-50A, AG-150A

(2) Start-up process

When the power is turned on, operation will not be performed for up to 45 seconds to allow Lossnay to perform information settings required for control purposes.

The start-up process can be confirmed by the blinking of LED1 in the Lossnay circuit board (1 second on/1 second off) or the remote controller LED when using the remote controller.

(3) Fan control

①Fan speed control for each system

The control indicated below can be performed according to the system that is paired.

Caution

- ●Up to two of the Lossnay remote controllers PZ-60DR-E, PZ-41SLB-E, and PZ-52SF-E can be used in the same group, but they cannot be used together with a different remote controller. When using two remote controllers, be sure to use the same model of remote controller.
- ●PZ-41SLB-E cannot be used in M-NET control. When controlling Lossnay in M-NET control, use PZ-60DR-E or PZ-52SF-E.
- ●When using PZ-60DR-E and mixing the LGH-15 to 100 types together with the LGH-150 and 200 types in a group,set the LGH-15 to 100 types as “Main”.

System Configuration		Remote controllers System controllers	Fan speed
Basic System	Stand-alone/multiple Lossnay and Lossnay remote controller: PZ-60DR-E	Lossnay remote controller PZ-60DR-E	The remote controller “Fan Speed Adjustment” button permits High (Extra High)/Low fan speed selection, and the “Extra Low fan SPEED” button permits an extra low fan speed selection. (The LGH-150 and 200 types do not provide Extra Low fan speed operation.)
	Stand-alone/multiple Lossnay and Lossnay remote controller: PZ-41SLB-E	Lossnay remote controller PZ-41SLB-E	The remote controller “Fan Speed Adjustment” button permits High (Extra High)/Low fan speed selection. (Extra Low fan speed selection is not available from the remote controller.)
	System interlocked with Mr. Slim	A-control remote controller K-control remote controller (Remote controller connection prohibited with Lossnay)	The A-control remote controller “Ventilation” button permits High (Extra High)/Low fan speed selection. (High (Extra High)/Low fan speed selection is not available from the K-control remote controller.) (Extra Low fan speed selection is not available from the A-control and K-control remote controllers.)
	Level signal/pulse signal System interlocked with the output device	None	Fixed to High (Extra High) fan speed.
M- NET Control	Stand-alone/multiple Lossnay and Lossnay remote controller: PZ-60DR-E	Lossnay remote controller PZ-60DR-E	The remote controller “Fan Speed Adjustment” button permits High (Extra High)/Low fan speed selection, and the “Extra Low fan speed” button permits an Extra Low fan speed selection. (The LGH-150 and 200 types do not provide Extra Low fan speed operation.)
	Stand-alone/multiple Lossnay and Lossnay remote controller: PZ-52SF-E	Lossnay remote controller PZ-52SF-E	The remote controller “Fan Speed Adjustment button” permits High (Extra High)/Low fan speed selection. (Extra Low fan speed selection is not available from the Lossnay remote controller.)
	M-NET Lossnay central control system	M-NET controller	The system remote controller, or centralized control remote controller “Fan Speed” button or “Ventilation setting” button permits High (Extra High)/Low fan speed selection. (The ON/OFF remote controller and the schedule timer do not permit fan speed selection.) (Extra Low fan speed selection is not available from the system remote controller or the centralized control remote controller.)
	M-NET System interlocked with City Multi indoor units	ME remote controller PAR-F27MEA, MA remote controller PAR-20/21MAA	The remote controller “Ventilation” button permits High (Extra High)/Low fan speed selection. (Extra Low fan speed selection is not available from the ME remote controller and MA remote controller.)

②Fan speed control by function setting

The following fan speed control can be set with PZ-60DR-E or the function selection switch (SW2) on the Lossnay circuit board.

Function	Details	Setting Method	
		PZ-60DR-E (Remote controller function selection)	PZ-60DR-E Not Used (Function selection switch)
Extra High /High Fan speed selection	This switches the settable fan speed from the remote controller and the system controller. Set this when there is a need for large air volume, or when there is a long duct line. When set to High fan speed, High/Low fan speed can be set, and when set to Extra High fan speed, Extra High/Low fan speed can be set.	Supply fan speed setting Extra High SH: L High H: L Exhaust fan speed setting Extra High SH: L High H: L (Refer to page 41)	Air supply SW2-9 : ON Exhaust SW2-10 : ON (Refer to page 38)
	Display: The fan speed display of the remote controller, and the system controller will be the same for either Extra High or High.		
	Multiple units: When PZ-60DR-E will not be used in a system of multiple Lossnay units, set the function selection switches on the Lossnay circuit board for each unit.		
Multi ventilation mode	This switches the settable fan speed from the remote controller and the system controller to a fixed Low fan speed. The supply/exhaust balance is adjusted to suit the usage environment or the place of installation.	Supply fan speed setting Multiple ventilation : L Exhaust fan speed setting Multiple ventilation : L (Refer to page 41)	Air supply SW2-4 : ON Exhaust SW2-5 : ON (Refer to page 38)
	Operation: When both supply and exhaust are set to the multi ventilation mode, due to operation restrictions PZ-60DR-E cannot be switched to a setting other than Low/Extra Low fan speed. Other remote controllers and system controllers can change the fan speed display; however, the fan will remain fixed at Low fan speed.		
	Multiple units: When PZ-60DR-E will not be used in a system of multiple Lossnay units, set the function selection switches on the Lossnay circuit board for each unit.		
Power supply/ exhaust mode (When operation starts)	During the first 30 minutes of operation, operation will be at High (Extra High) fan speed. This is used when rapid ventilation is desired at the time of starting operation. After 30 minutes have elapsed since starting operation, or when the fan speed set from the remote controller or the system controller has been changed to something other than High fan speed, power ventilation will be cancelled and the system will follow the fan speed set by the remote controller or system controller.	Power supply/ exhaust when operation starts : ON (Refer to page 41)	SW2-3: ON (Refer to page 38)
	Display: During power ventilation, PZ-60DR-E will display “POWER VENT START”. Other remote controllers and system controllers will display the set fan speed, even during power supply exhaust operation.		
	Multiple units: When PZ-60DR-E will not be used in a system of multiple Lossnay units, set the function selection switches on the Lossnay circuit board for each unit.		

Function	Details	Setting Method	
		PZ-60DR-E (Remote controller function selection)	PZ-60DR-E Not Used (Function selection switch)
Fan motor delay stop (Operation monitor with delay function) *Note 1	When TM4 ⑨, ⑩ output settings, and TM3 ⑥, ⑦ output settings are set to operation monitor with delay function 1 or 2, the fan will stop after 3 minutes have elapsed from the OFF operation when output ON (Closed) is switched to output OFF (Open) by the Lossnay stop instruction.	TM4 ⑨, ⑩ output setting "Operation monitor with delay function 1": SW2-8: ON TM3 ⑥, ⑦ output setting "Operation monitor with delay function 2": SW5-6: ON (Refer to page 38) * This function cannot be set from PZ-60DR-E.	

*Note 1: The fan will continue to operate even after operation is stopped with the remote controller, etc.

③ Restrictions when switching fan speed
The following restrictions exist when the fan speed is switched.
- When switching between High (Extra High) and Low fan speed, the fan will be stopped for approximately 5 seconds.
- When switching between settings other than Extra Low fan speed and Extra Low fan speed, the fan will be stopped for approximately 10 seconds.

④ Air supply fan forced stop
Under the following conditions, Lossnay will force stop of the air supply fan. However, when the following conditions are met while operating at Extra Low fan speed, the air supply fan will stop, and the exhaust fan will operate at Low fan speed.
(When operating at Extra Low fan speed, the air supply fan and the exhaust fan cannot be stopped separately.)
- When Mr. Slim is in defrost or stopped due to a fault, in an interlocked system with Mr. Slim that has a duct connection with Lossnay.
  (For cold inrush prevention, or falling dust prevention)
- When the indoor unit is in defrost, in an interlocked system with a City Multi indoor unit that has a duct connection with Lossnay.
  (For cold inrush prevention)
- When the outside temperature is -10°C or lower, the air supply fan is stopped periodically for approximately 10 minutes to 55 minutes.
  (To prevent freezing of the Lossnay core)

(4) Ventilation mode control

Lossnay (heat exchange) ventilation or bypass (normal) ventilation is achieved by switching the air duct inside the Lossnay unit with a damper.

① Ventilation mode
There are 3 control modes.
- Lossnay ventilation (heat exchange ventilation) mode: Heat exchange ventilation is performed regularly via the Lossnay core.
- Bypass ventilation (normal ventilation) mode : Ventilation is performed regularly without going through the Lossnay core.
- Automatic ventilation mode : A temperature sensor built into the unit provides automatic ventilation to a suitable ventilation mode. In addition, energy saving ventilation is provided by interlocking with a Mr. Slim or City Multi indoor unit.

② Damper control for each system
The control indicated below can be performed according to the system that is paired

Caution

- ●Up to two of the Lossnay remote controllers PZ-60DR-E, PZ-41SLB-E, and PZ-52SF-E can be used in the same group, but they cannot be used together with a different remote controller. When using two remote controllers, be sure to use the same model of remote controller.
- ●PZ-41SLB-E cannot be used in M-NET control. When controlling Lossnay in M-NET control, use PZ-60DR-E or PZ-52SF-E.

System		Remote controllers System controllers	Ventilation mode
Basic System	Stand-alone/multiple Lossnay and Lossnay remote controller: PZ-60DR-E	Lossnay remote controller PZ-60DR-E	The “Function selector” button of the remote controller permits ventilation mode switching for automatic, Lossnay, and bypass ventilation. Bypass ventilation is set at the time of night purge operation, and ventilation mode switching is not possible.
	Stand-alone/multiple Lossnay and Lossnay remote controller: PZ-41SLB-E	Lossnay remote controller PZ-41SLB-E	The “Function selector” button of the remote controller permits ventilation mode switching for automatic, Lossnay, and bypass ventilation.
	System interlocked with Mr. Slim	A-control remote controller K-control remote controller (Remote controller connection prohibited with Lossnay)	Fixed to automatic ventilation.
	Level signal/pulse signal output device and external device only	None	Fixed to automatic ventilation.
M- NET Control	Stand-alone/multiple Lossnay and Lossnay remote controller: PZ-60DR-E	Lossnay remote controller PZ-60DR-E	The “Function selector” button of the remote controller permits ventilation mode switching for automatic , Lossnay, and bypass ventilation. Bypass ventilation is set at the time of night purge operation, and ventilation mode switching is not possible.
	Stand-alone/multiple Lossnay and Lossnay remote controller: PZ-52SF-E	Lossnay remote controller PZ-52SF-E	The “Function selector” button of the remote controller permits ventilation mode switching for automatic , Lossnay, and bypass ventilation.
	M-NET Lossnay central control system	M-NET controller	The “Operation mode” button of the system remote controller and the centralized controller permits ventilation mode switching for automatic , Lossnay, and bypass ventilation. (The schedule timer, ON/OFF remote controller, and the group remote controller do not permit ventilation mode selection.)
	M-NET System interlocked with City Multi indoor units	ME remote controller PAR-F27MEA, MA remote controller PAR-20/21MAA	Fixed to automatic ventilation.

③ Bypass ventilation prohibited

When the conditions described below are applicable, the ventilation mode will be fixed at Lossnay ventilation. When bypass ventilation has been set from the remote controller or the system controller, damper operation will be set to Lossnay ventilation, even though bypass ventilation is displayed on the ventilation mode display.

- When the outdoor temperature is 8ºC or lower. (Product condensation prevention)
  When bypass ventilation prohibition has been set under this condition, the prohibition will be cancelled when the outdoor temperature goes from a temperature of less than 10 ºC to one higher than 10ºC.
- When there is an outdoor temperature (Outdoor Air) thermistor fault.
- When, in the automatic ventilation mode, there is an outdoor temperature (Outdoor Air) or indoor temperature (Return Air) thermistor fault.
- When Lossnay is set to the automatic ventilation mode and interlocked with Mr.Slim or City Multi indoor units set to the fan operation mode.

④ Damper operation

The damper provides control with a 30 second period. Accordingly, a delay of 30 seconds maximum may be generated from ventilation mode switching to damper operation.

⑤ Automatic ventilation algorithm temperature map

Ventilation mode switching of Lossnay ventilation/Bypass ventilation in the automatic ventilation mode is in accordance with the following map.

a. Systems interlocked with Mr. Slim and City Multi indoor units

The map will differ depending on the operation mode that has been set with the A-control remote controller or the K-control remote controller for Mr. Slim, or the MA remote controller or the ME remote controller for City Multi indoor units. There will be switching to the ventilation mode in conjunction with the set temperature of the air conditioner remote controller. Note that the “b” map will be followed while Mr. Slim and City Multi indoor units are stopped.

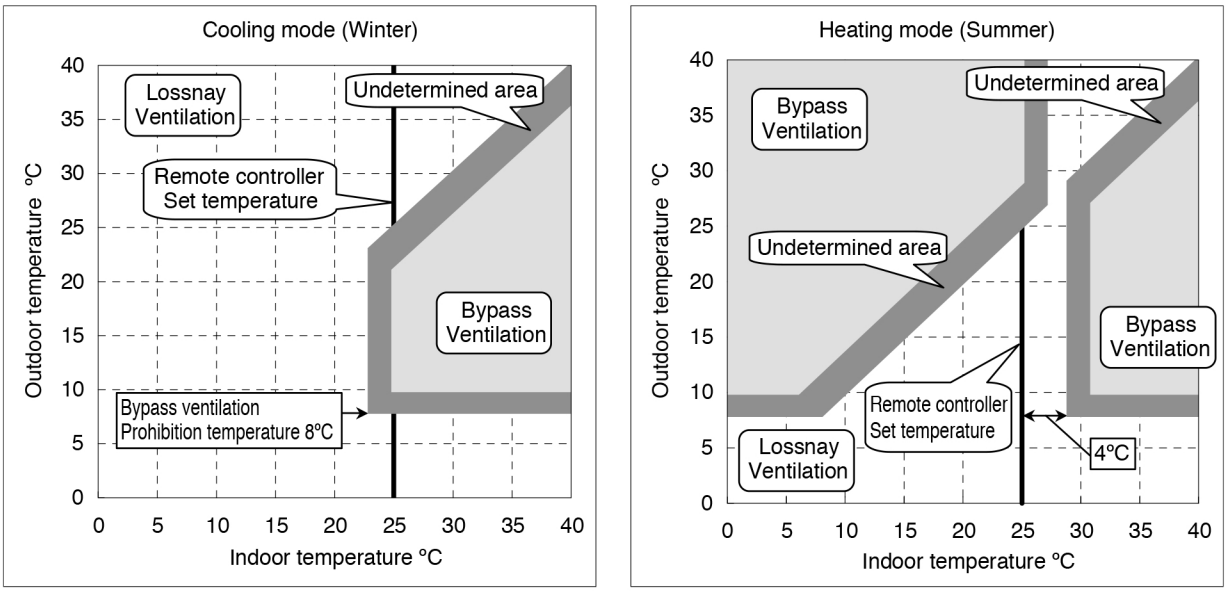

Lossnay ventilation area

Bypass ventilation area

Undetermined area

When operation starts under this condition, Lossnay ventilation will be activated.
When this condition is reached after operation starts, the current ventilation mode is maintained.

b. When there is no interlocking with Mr. Slim and City Multi indoor units

Pattern 1. Normal ventilation mode

When PZ-60DR-E is used, operation will be at the setting of automatic ventilation adjustment pattern “1” of the remote controller function selection. When PZ-60DR-E is not used, operation will be at the OFF setting of function selection switch (SW2-7) on the Lossnay circuit board.

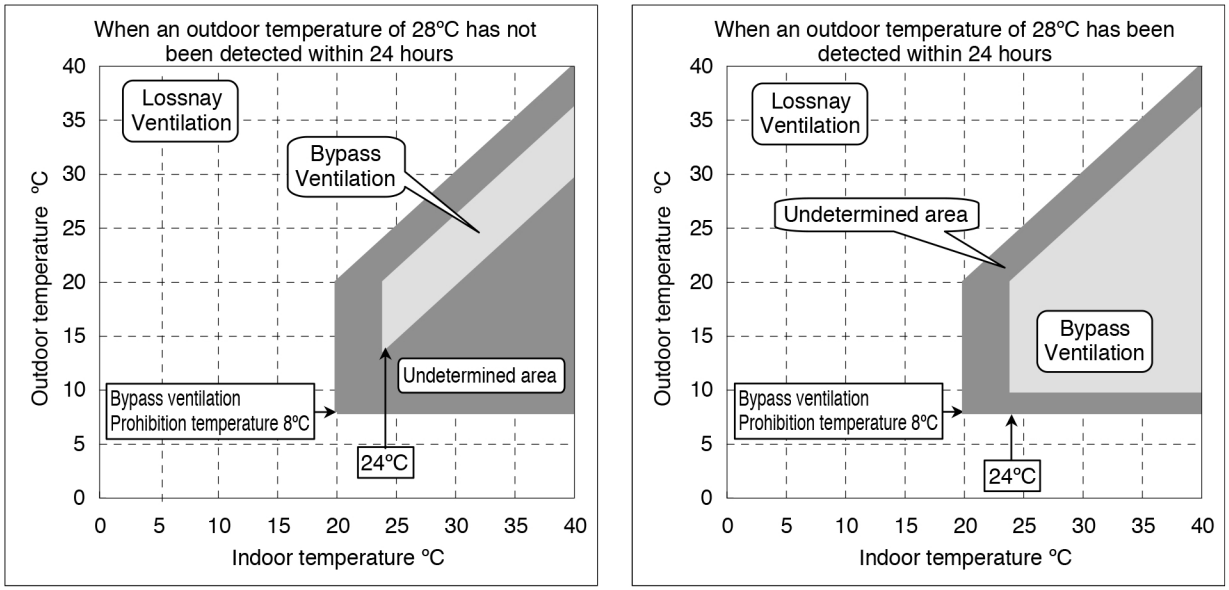

Lossnay ventilation area

Bypass ventilation area

Undetermined area

When operation starts under this condition, Lossnay ventilation will be activated.
When this condition is reached after operation starts, the current ventilation mode is maintained.

Pattern 2. Outdoor cooling priority mode

When the outdoor temperature is lower than the indoor temperature, this mode actively takes in the outdoor air for cooling.

When PZ-60DR-E is used, operation will be at the setting of automatic ventilation adjustment pattern “2” of the remote controller function selection. When PZ-60DR-E is not used, operation will be at the ON setting of function selection switch (SW2-7) on the Lossnay circuit board.

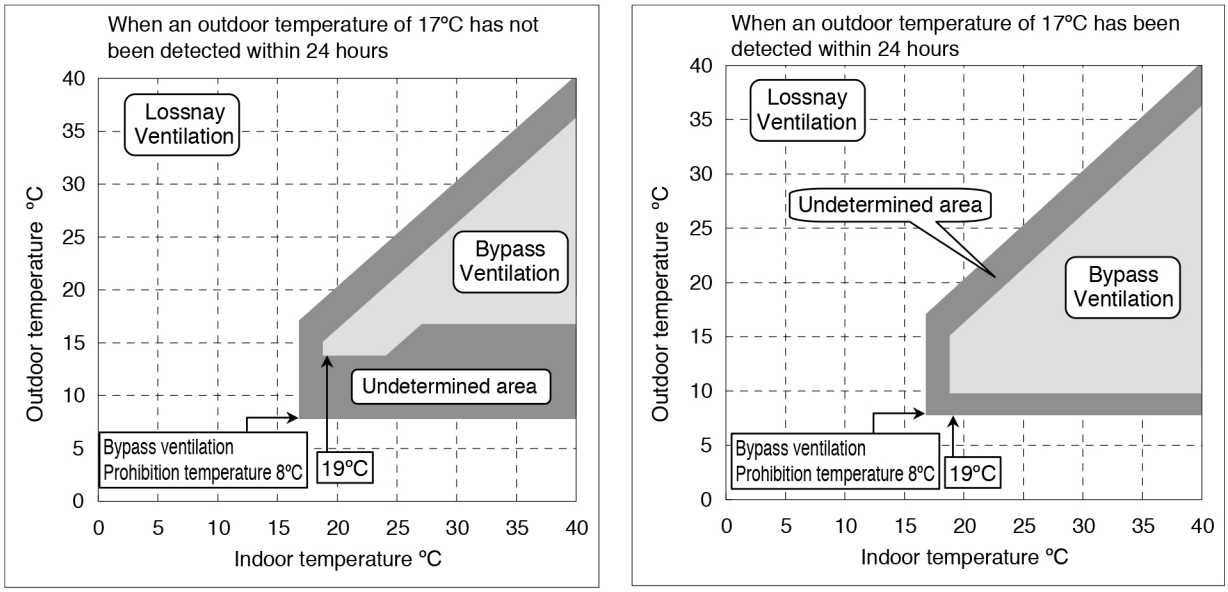

Lossnay ventilation area

Bypass ventilation area

Undetermined area

When operation starts under this condition, Lossnay ventilation will be activated.
When this condition is reached after operation starts, the current ventilation mode is maintained.

⑥ Ventilation mode change recommendation (RECOMMENDED, VENTILATION MODE) display
When using PZ-60DR-E and the ventilation mode is set to Lossnay ventilation or bypass ventilation, “RECOMMENDED” and “VENTILATION MODE” may be displayed alternately (for 10 minutes maximum). This function informs the user of the suitable ventilation mode according to the automatic ventilation algorithm. When a ventilation mode change recommendation has been displayed, more comfortable ventilation can be provided by pressing the “Function selector” button of the remote controller and switching to another ventilation mode.
(We recommend that “AUTO” be selected for the ventilation mode; however, there is no problem in leaving the ventilation mode unchanged with “RECOMMENDED” “VENTILATION MODE” displayed.)

(5) Interlocking with external devices

① Input signal
The system will interlock with the following input signals from external devices and start/stop.
Multiple units systems having multiple Lossnay units, input the signal to the “Main” Lossnay.

Type	Signal, and operation	Setting Method	
		PZ-60DR-E (Remote controller function selection)	PZ-60DR-E Not Used (Function selection switch)
Level signal	Charged 12 V DC/24 V DC Operation signal: 12 V DC/24 V DC Stop signal : 0 V Uncharged a-contact (Current drawn: 10 mA or greater) Operation signal: Close Stop signal : Open	Pulse input setting “oFF”	SW2-2: OFF
Pulse signal	Charged 12 V DC/24 V DC Uncharged a-contact Start/stop is inverted with each pulse 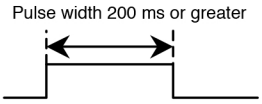	Pulse input setting “on”	SW2-2: ON
Systems interlocked with Mr. Slim	• Connect the signal cable of Mr. Slim to Lossnay, and perform the Lossnay interlock settings from the A-control remote controller or the K-control remote controller. • The system is started/stopped by interlocking with Start/Stop of the A-control remote controller or K-control remote controller. • The system is started/stopped by interlocking with the ventilation setting of the A-control remote controller. • The Mr. Slim operation mode, target temperature, and other internal information can also be brought in.	PZ-60DR-E (Lossnay remote controller) cannot be used.	SW2-2: OFF
Systems interlocked with Mitsubishi City Multi indoor units	• City Multi indoor units and Lossnay are connected by M-NET, and the Lossnay interlock setting is performed from the remote controller or system controller. • The system is started/stopped by interlocking with Start/Stop of the MA remote controller or ME remote controller and the ventilation setting. • The City Multi indoor unit operation mode, target temperature, and other internal information can also be brought in.	Pulse input setting “oFF”	SW2-2: OFF

② Interlock mode

Lossnay can set the following 4 types of interlock modes for the start/stop signal from the external device.

Interlock mode	Pulse signal input	Other than pulse signal input	Setting Method		
			PZ-60DR-E (Remote controller function selection)*1	PZ-41SLB-E (Interlock mode)	PZ-52SF-E or remote controller not used (Function selection switch)
ON/OFF interlock (Remote controller last touch operation permitted)	The start/stop condition will be reversed each time the pulse signal is input.	Lossnay will start with the operation signal of the external device, and Lossnay will stop with the stop signal.	Interlock mode setting selection “onoF” (Factory setting)	1 (Factory setting)	SW5-7: OFF SW5-8: OFF (Factory setting)
ON interlock	Lossnay will start when the pulse signal is input. Stopping is by remote controller.	Lossnay will start with the start signal of the external device. Stopping is by remote controller.	Interlock mode setting “on”	2	SW5-7: ON SW5-8: OFF
OFF interlock	Lossnay will stop when the pulse signal is input. Starting is by remote controller.	Lossnay will stop with the stop signal of the external device. Starting is by remote control.	Interlock mode setting “oFF”	3	SW5-7: OFF SW5-8: ON
External input priority ON/OFF interlock	Same as ON/OFF interlocked.	Same as ON/OFF interlocked. Note that during operation that started with a signal from the external device, stopping by remote controller will not be possible.	Interlock mode setting “oUT”	4	SW5-7: ON SW5-8: ON

*1: Display of LCD when setting is by PZ-60DR-E remote controller

③ Delay operation

This function delays the starting of Lossnay for 30 minutes with respect to the start signal from the external device (and for 10 to 60 minutes when using PZ-41SLB-E). When using remote controllers other than PZ-41SLB-E, LED1 on the Lossnay circuit board will light during delay operation. Also, when using PZ-60DR-E and PZ-41SLB-E, there will be a display of the delay time.

Function settings	Setting Method		
	PZ-60DR-E (Remote controller function selection)	PZ-41SLB-E (Delay starting time)	PZ-52SF-E or remote controller not used (Function selection switch)
Normal operation	Delay operation setting “oFF” (Factory setting)	0 minutes (Factory setting)	SW5-1: OFF (Factory setting)
Delay operation	Delay operation setting “on”	10 to 60 minutes (in 10-minute units)	SW5-1: ON

Note that delay operation will be disabled under the following condition

- When the start signal from the external device is a pulse signal.
- When the system is interlocked with Mr. Slim or City Multi indoor units set to the fan operation mode.
- When the system is restarted within 2 hours of Lossnay stop.
- When the interlock mode is set to “OFF Interlock”.

(6) External input/output terminals on the Lossnay circuit board

Located on the Lossnay circuit board are terminals for the external output of the Lossnay operating condition, and input terminals for external switching of the Lossnay fan speed and ventilation mode.

① Output terminals

The function and contact rating of each output terminal are described below.
"Operation monitor" and "Bypass operation monitor" are in common with "Operation monitor with delay function 1" and "Operation monitor with delay function 2", respectively.
(Switch with the DIP switch on the Lossnay circuit board. Refer to page 38 and 39.)

Output	Function	Output Terminal	Signal Form	Contact Rating	
				Maximum	Minimum
Malfunction monitor	Turned ON (closed) at time of Lossnay malfunction.	TM3 ⑦, ⑧ *1	Uncharged a-contact	240 V AC, 1 A 24 V DC, 1 A	220 V AC, 100 mA 5 V DC, 100 mA
Operation monitor *3	Turned ON (closed) at time of Lossnay operation. This can also be turned ON (closed) at time of air supply fan operation.	TM4 ⑨, ⑩	Uncharged a-contact	240 V AC, 2 A 24 V DC, 2 A	220 V AC, 100 mA 5 V DC, 100 mA
Operation monitor with delay function 1	Turned ON (closed) 10 seconds after start of air supply fan.				
Bypass operation monitor	Turned ON (closed) at time of bypass ventilation.	TM3 ⑥, ⑦ *2	Uncharged a-contact	240 V AC, 1 A 24 V DC, 1 A	220 V AC, 100 mA 5 V DC, 100 mA
Operation monitor with delay function 2	Turned ON (closed) 10 seconds after start of air supply fan when outdoor air temperature is -5°C or lower. Turned OFF (open) when outdoor air temperature is 15°C or higher.				

*1 Terminal ⑦ of TM3 is a common terminal with bypass operation monitor/operation monitor with delay function 2 output ⑦.

*2 Terminal ⑦ of TM3 is a common terminal with malfunction monitor output ⑦.

*3 The operation monitor can also be used as an air supply fan operation monitor with the setting described below.

< When using PZ-60DR-E > Set "2" for operation monitor output of function selection.

< When not using PZ-60DR-E > Set the operation monitor output switch on the Lossnay circuit board (SW5-2) to ON. (This function cannot be used when operation monitor with delay function 1 has been set.)

② Input terminals

a. High/Low/Extra Low fan speed switching input

This is used for external switching of the fan speed by means of a commercially available CO_2 sensor, etc.

Operation

During the input of High (Extra High)/Low/Extra Low fan speed selection, PZ-60DR-E displays "Automatic Fan Speed" indicator. The set fan speed cannot be changed while "Automatic Fan Speed" is displayed due to operation restrictions. Other remote controllers and system controllers can change the fan speed display; however, the fan will remain fixed at the input fan speed selection of High (Extra High)/Low/Extra Low.

Multiple units

When using PZ-60DR-E in a system of multiple Lossnay units, input of High (Extra High)/Low/Extra Low fan speed into the "Main" Lossnay will permit the switching of the fan speed of all Lossnay units within the same group. When not using PZ-60DR-E, input High/Low/Extra Low fan speed into each Lossnay unit. In this case, the setting is applied only to the Lossnay units that have received the High/Low/Extra Low input.

- A remote display adaptor (PAC-SA88HA-E), which is sold separately, is required for the connections.
- The LGH-150 and 200 types cannot use the Extra Low fan speed selection input.

[1] When operating on High (Extra High) fan speed via external input

Usually, ventilation is performed at Low/Extra Low fan speed, and there is automatic switching to High (Extra High) fan speed when dirty indoor air is detected by a CO_2 sensor, etc.

Insert the remote display adaptor (PAC-SA88HA-E) into the connector (CN16) on the Lossnay circuit board, and input the signal (uncharged a-contact) from a CO_2 sensor to the brown and red lines. When the contacts in the diagram below are ON (closed), the system will switch to High (Extra High) fan speed regardless of the fan speed settings on the remote controller or the system controller.

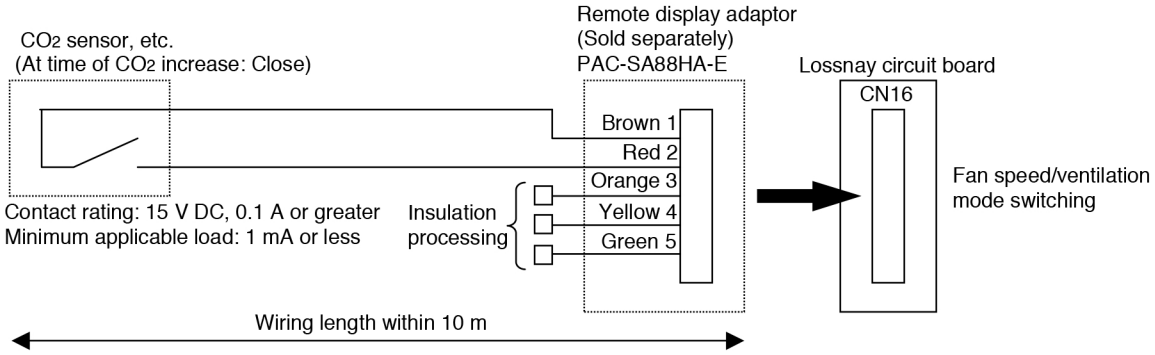

[2] When operating on Low fan speed via external input

Usually, ventilation is performed at High (Extra High) fan speed, and there is automatic switching to Low fan speed when an absence of dirty indoor air is detected by a CO_2 sensor, etc.

Insert the remote display adaptor (PAC-SA88HA-E) into the connector (CN16) on the Lossnay circuit board, and input the signal (uncharged a-contact) from a CO_2 sensor to the brown and orange lines. When the contacts in the diagram below are ON (closed), the system will switch to Low fan speed regardless of the fan speed settings on the remote controller or the system controller.

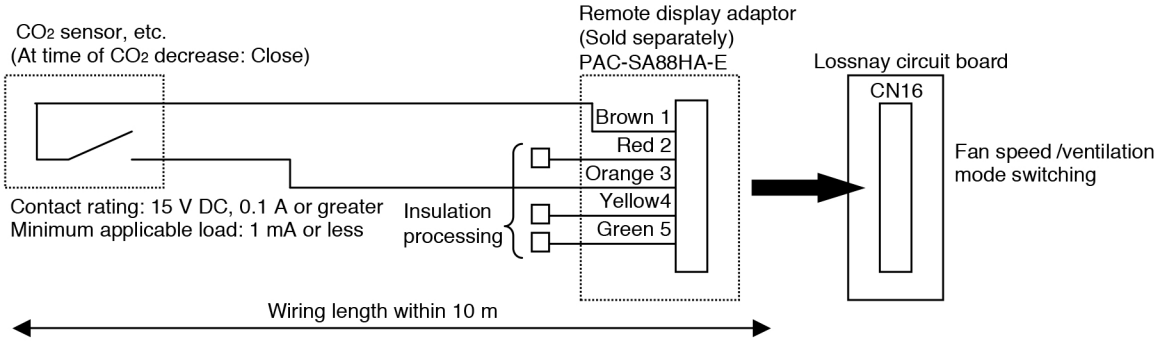

[3] When operating on Extra Low fan speed via external input (The LGH-150 and 200 types cannot be used)

Usually, ventilation is performed at High (Extra High)/Low fan speed, and there is automatic switching to Extra Low fan speed when an absence of dirty indoor air is detected by a CO_2 sensor, etc.

Insert the remote display adaptor (PAC-SA88HA-E) into the connector (CN16) on the Lossnay circuit board, and input the signal (uncharged a-contact) from a CO_2 sensor to the brown and yellow lines. When the contacts in the diagram below are ON (closed), the system will switch to Extra Low fan speed regardless of the fan speed settings on the remote controller or the system controller.

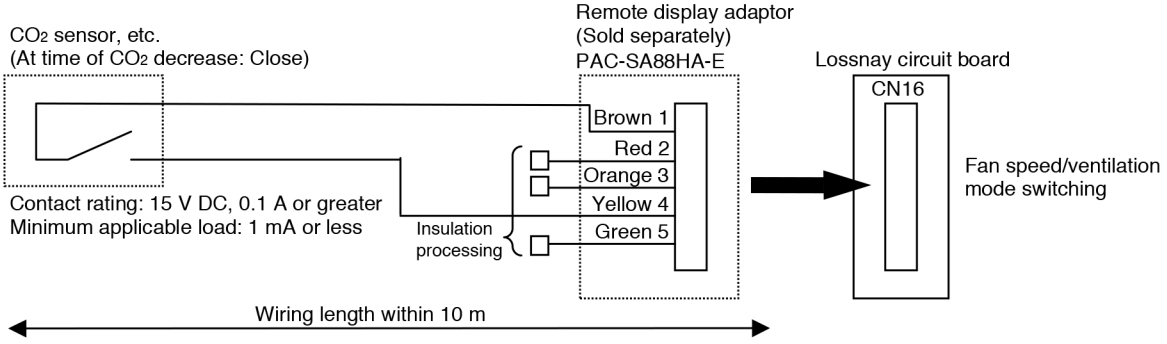

b. Bypass ventilation switching input

This is used to force a changeover of the ventilation mode to bypass ventilation by means of the input of an external switch, etc.

Operation

During the input of bypass ventilation switching, the ventilation mode display of the remote controller and the system controller will change to bypass ventilation. With PZ-60DR-E, the ventilation mode setting cannot be changed due to operation restrictions. Even using a different remote controller or system controller to change the ventilation mode setting will result in an automatic return to bypass ventilation.

Note that when the conditions of bypass ventilation prohibition are applicable, the ventilation mode display of the remote controller and the system controller will remain as bypass ventilation; however, only damper operation will be fixed at Lossnay (heat exchange) ventilation.

Multiple units

When using PZ-60DR-E in a system of multiple Lossnay units, input of bypass ventilation switching into the “Main” Lossnay will permit the switching of the ventilation mode of all Lossnay units within the same group. When not using PZ-60DR-E, input bypass ventilation switching into each Lossnay unit. (The setting is applied only to the Lossnay units that have received input.)

A remote display adaptor (PAC-SA88HA-E), which is sold separately, is required for the connections.
Insert the remote display adaptor (PAC-SA88HA-E) into the connector (CN16) on the Lossnay circuit board, and input the signal (uncharged a-contact) from an external switch to the brown and green lines. When the switch is ON (closed) in the diagram below, the system will switch to bypass ventilation regardless of the ventilation mode setting of the remote controller and the system controller.

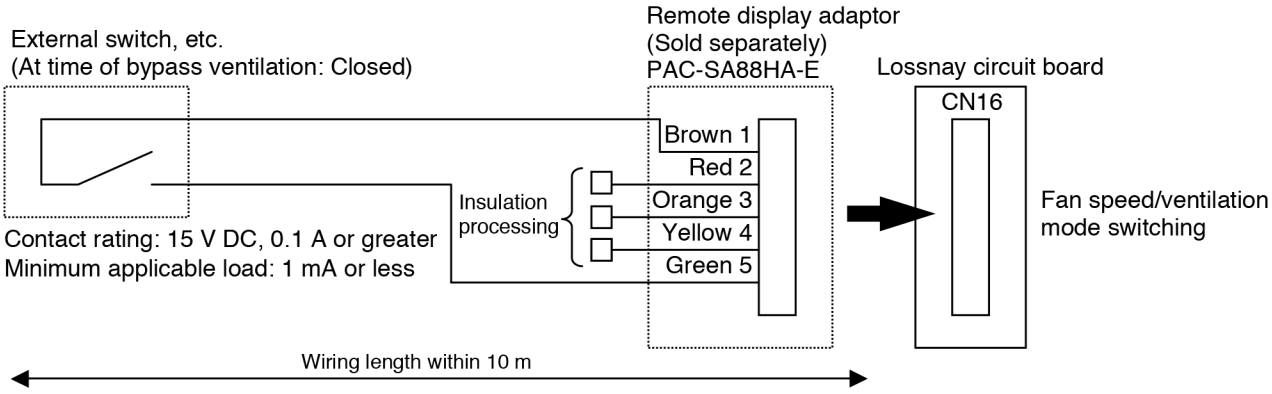

(7) Remote/Local switching

This is used to prohibit Starting-Stopping from the remote controller.
A remote ON/OFF adaptor (PAC-SE55RA-E), which is sold separately, is required.
Insert the remote ON/OFF adaptor (PAC-SE55RA-E) into the connector for remote switching (CN32) on the Lossnay circuit board, and connect the remote control signal (uncharged a-contact).
Note: This function cannot be used when using PZ-41SLB-E.

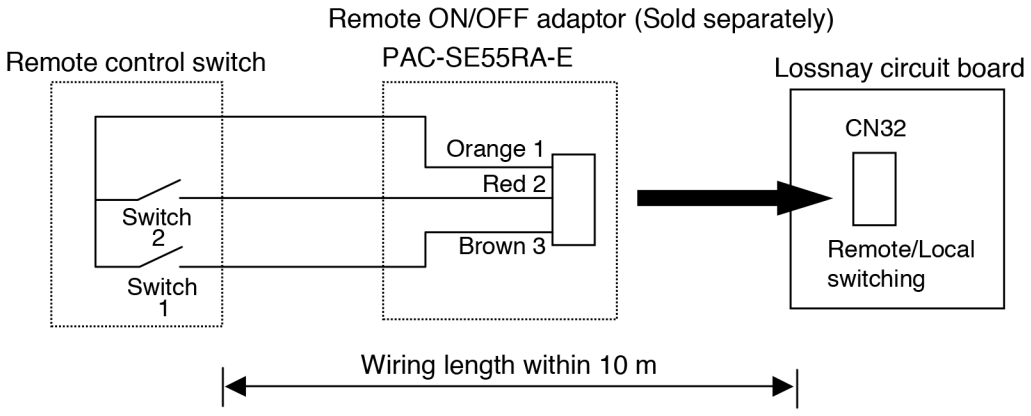

Start/stop operation is not possible with the remote controller when switch 1 is ON.
While switch 1 is ON, turning switch 2 ON will start Lossnay, and turning switch 2 OFF will stop Lossnay.

* Remote/Local switching and operation interlocked with an external device (external control input) cannot be used together.

(8) Trial operation function

This function operates Lossnay without the need of a device (such as a remote controller, or an external device) to control Lossnay.
This function permits verification of the connection condition of the AC line and wiring when Lossnay has been set up.
Also, Lossnay can be forced to operate even when the system is down.

• Trial operation mode
Setting the trial operation switch (SW 2-1) on the Lossnay circuit board to ON will set the High (Extra High) fan speed operation mode. The damper will be fixed at bypass ventilation for approximately 1 minute, and then the system will be fixed at Lossnay ventilation.

Control target	Operation
Fan	Air supply side, and exhaust side fan will both be High (Extra High) fan speed
Damper motor	Bypass ventilation (normal ventilation) fixed

* If the Lossnay remote controller or the centralized controller have been set, you can verify on the display of the LCD that Lossnay is in the trial operation mode.

(9) Night Purge operation

PZ-60DR-E is required to perform night purge operation.
Night purge operation is used in the summer to automatically ventilate a room at night while the air conditioner is stopped, to discharge accumulated heat and there by reduce the air conditioning load the next morning.
If Night purge is enabled per the “Installation Manual” [5. Function Selection [5] (8)], night purge operation will be performed based on the flowchart shown in the next page.
From 1:00 A.M. to 6:00 A.M, “Night Purge” indicator is shown on the screen (at 1).

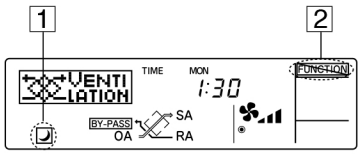

• The fan speed will revert to the last setting before the Lossnay unit was stopped.
• Night purge operation is terminated in any of the following conditions (① to ④), and is not resumed until the start conditions of the next day are reached.
① Between 6:00 and 0:59
② When the operation is stopped between 1:00 and 6:00 with a remote controller or system controller
③ When the operation is switched on or off between 1:00 and 6:00 by a scheduled timer (Weekly timer)
④ When the operation is switched on or off between 1:00 and 6:00 by an air conditioner, an external control input or a remote input

Note:
• Night purge can be performed when the clock use setting is ON (use clock) in Function Selection.
• The Function Selector cannot be switched during Night purge operation. (“Locked” 2 will blink.)
• Night purge cannot be used with the Simple timer.
• Night purge settings can be checked in the Function Selection mode.
• When more than one Lossnay units are running, the temperature is measured by the “Main” Lossnay.
• Night purge is not performed when “CENTRAL” is displayed.

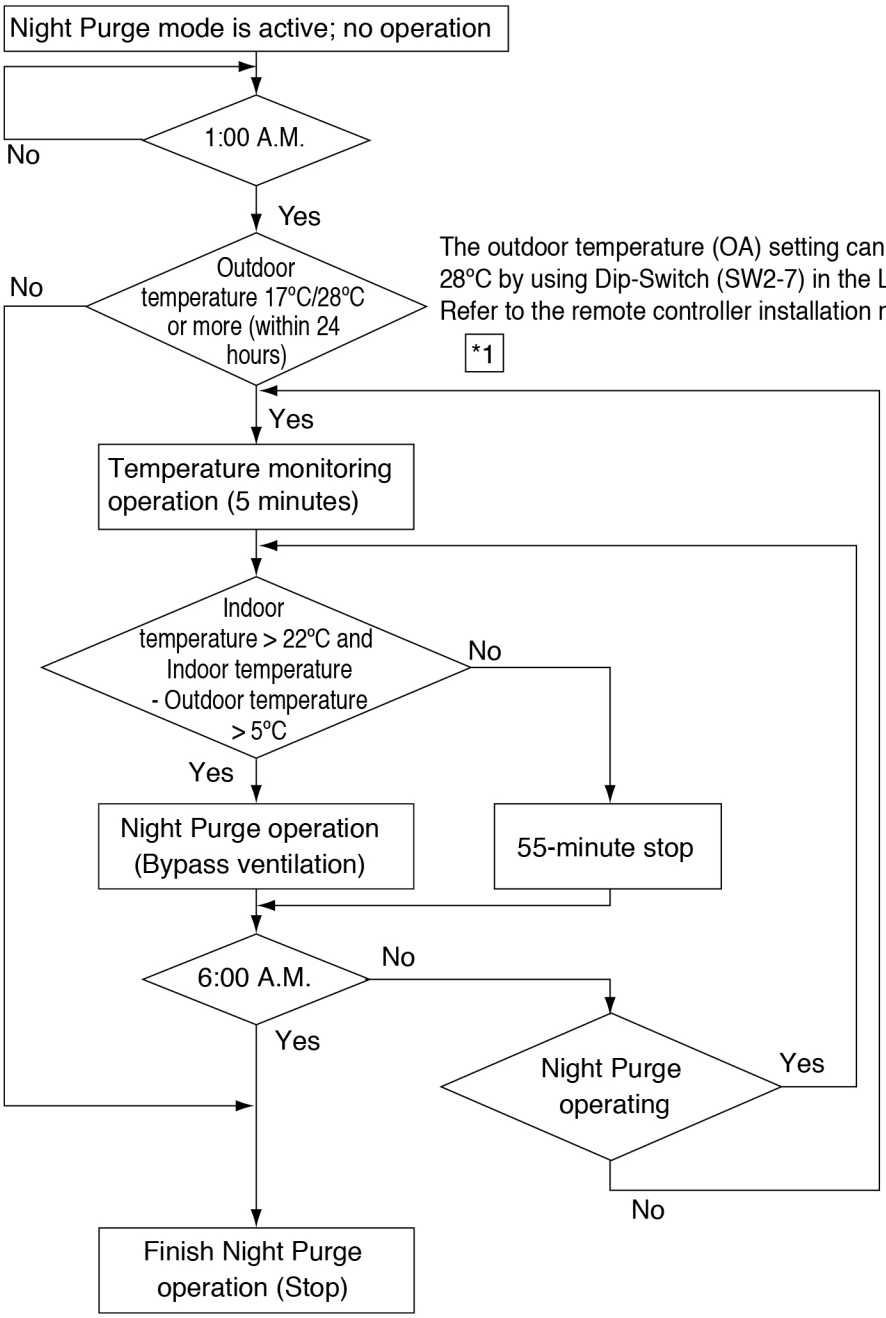

The outdoor temperature (OA) setting can be selected either 17ºC or 28ºC by using Dip-Switch (SW2-7) in the Lossnay control box. Refer to the remote controller installation manual for more information.

*1

*1: When Lossnay is interlocked with the City Multi indoor units, “Stop of Lossnay during interlocked operation with the City Multi operating in cooling mode” is another necessary condition in addition to that of “Detection of an outdoor temperature of 17 ºC or 28 ºC or higher (within 24 hours)”.
(Night Purge operation will be performed when either of these necessary conditions has been satisfied.)

(10) Setting of function selection switches (SW1, 2, and 5)

The associated switches are as listed below.

* This function can also be set from PZ-60DR-E. When the function has been switched from the remote controller later on, the system will operate according to the setting of the remote controller.

Type		Name	Specification
SW1		Main/Sub selection switch	Lossnay control mode (Main/Sub) switching (The factory setting is set to “Main”.)
SW2	1	Trial operation	ON : Trial operation mode OFF: Normal mode (Factory setting)
	2	Pulse input *	ON : At time of pulse signal input (Requires a pulse width of 200 ms or greater) OFF: At time of Level signal and Mr. Slim signal inputs (Factory setting)
	3	Power supply/exhaust when operation starts *	ON : Power supply exhaust mode OFF: Normal mode (Factory setting)
	4	SA fan fixed at Low speed *	ON : Low fan speed fixed OFF: Normal mode (Factory setting)
	5	EA fan fixed at Low speed *	ON : Low fan speed fixed OFF: Normal mode (Factory setting)
	6	Power supply ON/OFF * Note 2	ON : Enable OFF: Disable (Factory setting)
	7	Bypass ventilation priority at Automatic mode * Temperature condition for Night purge operation	ON : Automatic ventilation outdoor air cooling priority mode / Night purge operation condition of outdoor air temperature is 17ºC or higher (within 24 hours) OFF: Automatic ventilation normal mode / Night purge operation condition of outdoor air temperature is 28ºC or higher (within 24 hours) (Factory setting)
	8	TM4 ⑨, ⑩ output setting	ON : Operation monitor output with delay function 1. Refer to (3) ② Fan speed control by function setting (page 26), and (6) ① Output terminals (page 33). OFF: Operation monitor output based on SW5-2 (Factory setting)
	9	Supply Extra High/High *	ON : Supply air fan Extra High fan speed OFF: Supply air fan High fan speed (Factory setting)
	10	Exhaust Extra High/High *	ON : Exhaust air fan Extra High fan speed OFF: Exhaust air fan High fan speed (Factory setting)
SW5	1	Delay setting * Note 2	ON : Delay operation of 30 minutes OFF: Normal (Factory setting)
	2	Operation output monitor *	ON : Operation monitor output correspond to air supply fan OFF: Operation monitor output with normal operation (Factory setting)
	3	Exhaust fan stop during air conditioner defrost * Exhaust fan Low fan speed at outdoor air temperature of -15ºC or lower *	ON : Both Exhaust air fan and Supply air fan (Low fan speed) operation at outdoor air temperature of -15ºC or lower OFF: Exhaust fan operation (Only Supply air fan stopped) (Factory setting)
	4	Automatic recovery after power failure * Note 2	ON : After the recovery, operation at the mode preceding the power failure OFF: Stop after the recovery (Factory setting)
	5	Filter cleaning setting * Note 2	Selection switch for accumulated running time of the filter cleaning display. ON : 3,000 hours OFF: No filter maintenance display (Factory setting)
	6	TM3 ⑥, ⑦ output setting	ON : Operation monitor output with delay functions 2. Refer to (3) ② Fan speed control by function setting (page 26), and (6) ① Output terminals (page 33). OFF: Bypass ventilation operation monitor output (Factory setting)
	7 8	Interlock mode setting * Note 2	Effective only at time of external control input usage. Refer to (5) ② Interlock mode (page 32).

Type		Name	Specification
SW5	9	Exhaust fan stop at outdoor air temperature of -15°C or lower *	ON : Both Supply air fan and Exhaust air fan stop OFF: Exhaust air fan operation (Only Supply air fan stopped) (Factory setting)
	10	Type setting Note 1	LGH-15 to 100 type : Fixed at OFF LGH-150 and 200 type : Fixed at ON

Note 1: Set LGH-15 to 100 types to the OFF setting, and LGH-150 and 200 types to the ON setting. The system will not operate properly when the setting is changed.

Note 2: When PZ-41SLB-E is used, the settings will be disabled for SW2-6, SW 5-1, SW5-4, SW5-5, and SW5-7, and SW5-8.
(Operation after a recovery from a power failure will be fixed at power failure automatic recovery, and functions other than this will be according to the setting of PZ-41SLB-E.)

Note 3: When the aforementioned switches (SW2, and SW5) are at the factory setting, type LGH-15 to 100 will all be at the OFF setting, and type LGH-150 and 200 will all be set to OFF except for SW5-10.
When replacing the circuit board, set the new board to the same setting as that of the board prior to replacement.

• Main/Sub selection switch
- In systems of only one Lossnay unit, be sure to set it to “Main”.
- In systems with multiple Lossnay units, be sure that one unit is set to “Main”, and that all the others are set to “Sub”.
- When interlocked with an external device, be sure to connect the external device to the Lossnay that is set to “Main”.
- When using PZ-60DR-E and mixing the LGH-15 to 100 types together with the LGH-150 and 200 types in a group, set the LGH-15 to 100 types as “Main”. (When the LGH-150 and 200 types are set to “Main”, Extra Low operation will not be possible.)

(11) Function selection with PZ-60DR-E

When using PZ-60DR-E, function selection can be made from the remote controller.
Functions can be switched from PZ-60DR-E even after the function selection switch has been set on the Lossnay circuit board.
(Settings from PZ-60DR-E will have priority over function selection switch settings of the Lossnay circuit board.)
When two remote controllers are used, “24HR VENTILATION”, “LOSSNAY FUNCTION”, and “INTERLOCK SETTING” can be set only on the “Main” remote controller.
The “Main” and “Sub” remote controller will be determined automatically by communication when the main unit power is turned on. The side on which “24HR VENTILATION”, “LOSSNAY FUNCTION”, and “INTERLOCK SETTING” are displayed is the “Main” remote controller.
* For information about operation of PZ-60DR-E, refer to the Lossnay remote controller PZ-60DR-E Installation Manual and the Operating Instructions.

① Function selection mode

The following functions can be changed with PZ-60DR-E function selection mode. Please change the settings as needed.

Major items	Intermediate items (Names)	Dot matrix display	Selection display	Function	Notes
Change Language CHANGE LANGUAGE	English display	LANGUAGE ENGLISH(en)		Dot matrix display characters English (Factory setting)	—
	German display	LANGUAGE Deutsch(de)		Dot matrix display characters German	
	Spanish display	LANGUAGE ESPAÑOL(es)		Dot matrix display characters Spanish	
	Russian display	LANGUAGE РУССК(ru)		Dot matrix display characters Russian	
	Italian display	LANGUAGE ITALIANO(it)		Dot matrix display characters Italian	
	Chinese display	LANGUAGE 中文 (zh)		Dot matrix display characters Chinese	
	French display	LANGUAGE FRENCH(fr)		Dot matrix display characters French	
	Japanese display	LANGUAGE ﾆﾎﾝｺﾞ(ja)		Dot matrix display characters Japanese	
Function limit FUNCTION SELECTION	Button operation restricted mode (Operation lock)	LOCKING FUNCTION	oFF	Without operation lock (Factory setting)	*1
			no1	Lock with the exception of the “ON/OFF” button	
			no2	All button lock	
	24 hour ventilation setting (The LGH-150 and 200 types cannot be set)	24HR VENTILATION	oFF	Stops operation by pressing the “ON/OFF” button during operation (Factory setting)	*2
			on	Extra Low fan speed operation by pressing the “ON/OFF” button during operation To stop, press the “ON/OFF” button twice within 3 seconds, or hold down the “ON/OFF” button for 5 seconds	
Mode selection MODE SELECTION	Clock use setting	CLOCK	oFF	Clock function is not used	*3
			on	Use the clock function (Factory setting)	
	Timer function setting	WEEKLY TIMER		Use the weekly timer (Factory setting) This cannot be selected unless the clock function is used	*4
		SIMPLE TIMER		Use the simple timer Clock (time, day of the week) is not displayed	
		TIMER MODE OFF		Timer is not used	
	Contact number setting (Display contact information when there is a fault)	CALL OFF		Contact information is not displayed when there is a fault (Factory setting)	*5
		CALL:**** *******		The telephone number that has been set is displayed at time of fault	
Display change DISP MODE SETTING	Filter maintenance sign setting	MAINTENANSE SIGN	on	With “FILTER CLEANING” maintenance sign display	—
			oFF	Without “FILTER CLEANING” maintenance sign display (Factory setting)	
	Lossnay core maintenance sign setting	MAINTENANSE SIGN	on	With “CORE CLEANING” maintenance sign display	—
			oFF	Without “CORE CLEANING” maintenance sign display (Factory setting)	

*1: To execute the operation lock, the execution operation (of holding down the “Filter” button and the “ON/OFF” button simultaneously for 2 seconds) is required at the normal screen.
To cancel, the same operation is also required.

*2: When the 24 hour ventilation setting is ON, “24HR VENTILATION” is displayed during Extra Low fan speed operation.
When the pulse input setting is ON, the 24 hour ventilation setting is not permitted.
When using two remote controllers, the 24 hour ventilation setting is not permitted from the “Sub” remote controller.
Even during the High/Low fan speed switching input (Refer to page 33 and 34), 24 hour ventilation (Extra Low fan speed operation) will be given priority.
*3: When using weekly timer and night purge operation, please set clock use to on.
*4: When using the simple timer, night purge operation will not be possible.
*5: When the contact information display is set at the time of a fault, pressing the “Clear” button of the remote controller will display the number that was set.

When two remote controllers are used, the following settings are permitted for the “Main” remote controller only.

Major items	Intermediate items (Names)	Dot matrix display	Selection display	Function	Notes
Installation setting LOSSNAY FUNCTION	Supply fan speed setting	SA SETTING	SH: L	Used at Extra High fan speed/Low fan speed	—
			H: L	Used at High fan speed/Low fan speed (Factory setting)	
			L	Fixed at Low fan speed (Multiple ventilation mode)	
	Exhaust fan speed setting	EA SETTING	SH: L	Used at Extra High fan speed/Low fan speed	—
			H: L	Used at High fan speed/Low fan speed (Factory setting)	
			L	Fixed at Low fan speed (Multiple ventilation mode)	
	Power supply/exhaust when operation starts	POWER VENT START	oFF	Do not execute power supply/exhaust when operation starts (Factory setting)	*6
			on	Execute power supply/exhaust when operation starts (30 minutes)	
	Sub Lossnay setting	SUB SET	RC	Enable function settings from the remote controller to the “sub” Lossnay (Factory setting)	*7
			dIP	Disable function settings from the remote controller to the “sub” Lossnay	
	Power supply ON/OFF/AUTO	RECOVERY SETTING	oFF	Stop when the power supply is turned on (Factory setting)	—
			on	Start when the power supply is turned on	
			AUTo	Operate at the condition prior to turning off the power	
	Operation monitor output selection	OPERATION MONITOR	1	Corresponding to the operation monitor output exhaust fan (Factory setting)	*8
			2	Corresponding to the operation monitor output air supply fan	
	Exhaust fan speed selection for cold region intermittent operation (at outdoor air temperature of -15°C or lower)	EA SETTING INTERMIT.	oFF	Exhaust fan stop	*9
			Lo	Exhaust fan operates at Low fan speed (fixed)	
			on	Exhaust fan normal operation (without fan speed change) (Factory setting)	
	Night purge setting	NIGHT PURGE	oFF	Night purge disabled (Factory setting)	*10
			on	Night purge enabled	
	Automatic ventilation adjustment pattern selection	BYPASS SETTING	1	Automatic ventilation normal mode / Night purge operation condition of outdoor air temperature is 28°C or higher (within 24 hours) (Factory setting)	*11
			2	Automatic ventilation outdoor air cooling priority mode / Night purge operation condition of outdoor air temperature is 17°C or higher (within 24 hours)	

Major items	Intermediate items (Names)	Dot matrix display	Selection display	Function	Notes
Interlocking item setting INTELOCK SETTING	Interlock mode selection	INTERLOCK MODE	onoF	ON/OFF interlocked (Factory setting)	*12
			on	ON interlocked	
			oFF	OFF interlocked	
			oUT	External input signal priority	
	Pulse input setting	INPUT SIGNAL	oFF	Without pulse input (Factory setting)	*13
			on	With pulse input	
	Delay operation setting	DELAY OPERATION	oFF	Without delay operation (Factory setting)	*14
			on	With delay operation (for 30 minutes)	
	Exhaust operation setting during air conditioner defrosting	EA SETTING DEFROST	oFF	Exhaust fan stop	*9
			on	Exhaust fan operation (Factory setting)	

*6 : Pressing the “fan speed adjustment” button during the power supply/exhaust operation at the start of operation will result in a change of the fan speed.

*7 : Only the following functions will be supported. “Supply fan speed” “Exhaust fan speed” “Power supply/exhaust when operation starts”

*8 : The setting of the operation monitor output selection will be disabled when the setting is to Operation monitor output with delay function 1 with the TM4 ⑨, ⑩) output setting switch (SW2-8) on the Lossnay circuit board, or when the setting is to Operation monitor output with delay function 2 with the TM3 ⑥, ⑦ output setting switch (SW5-6).

*9: When cold region intermittent operation or air conditioner defrost operation has been set during Extra Low fan speed operation, the supply fan will stop, and the exhaust fan will operate at Low fan speed or stop.

*10: When clock use is OFF and the simple timer is used, night purge operation will not be performed. Switching of the ventilation mode will not be possible during night purge operation (Bypass ventilation fixed)

*11: Refer to (4) ⑤ Automatic ventilation algorithm temperature map.

*12: External input priority will not be possible when the pulse input setting is ON.

*13: When the pulse input setting is ON, the 24 hour ventilation setting is not permitted.

*14: Delayed operation will not be possible when the pulse input setting is ON.

② Maintenance mode

This mode displays the total operation hours of Lossnay, checks the Lossnay address, and displays the error history.

Notes

- If the remote controller Maintenance mode is entered during timer operation, the timer operation will be cancelled. Set timer operation after completing the remote controller Maintenance mode.
- When using two remote controllers, if one remote controller is set to remote controller Maintenance mode, “FUNCTION” will be displayed in the other remote controller and its operation will be disabled.
- Button response may at times be slow due to communication processing; this is not an error.

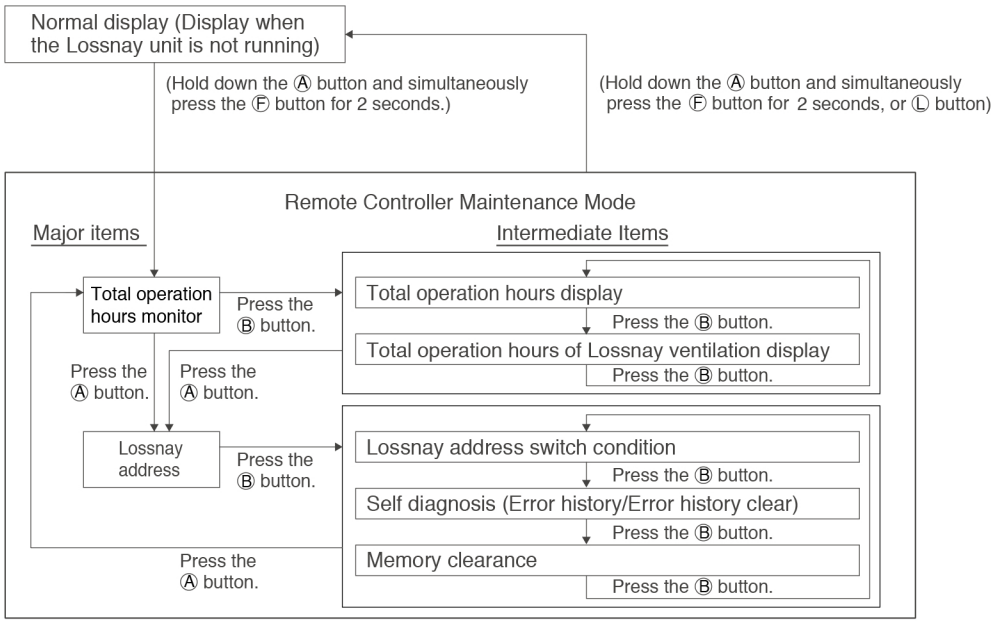

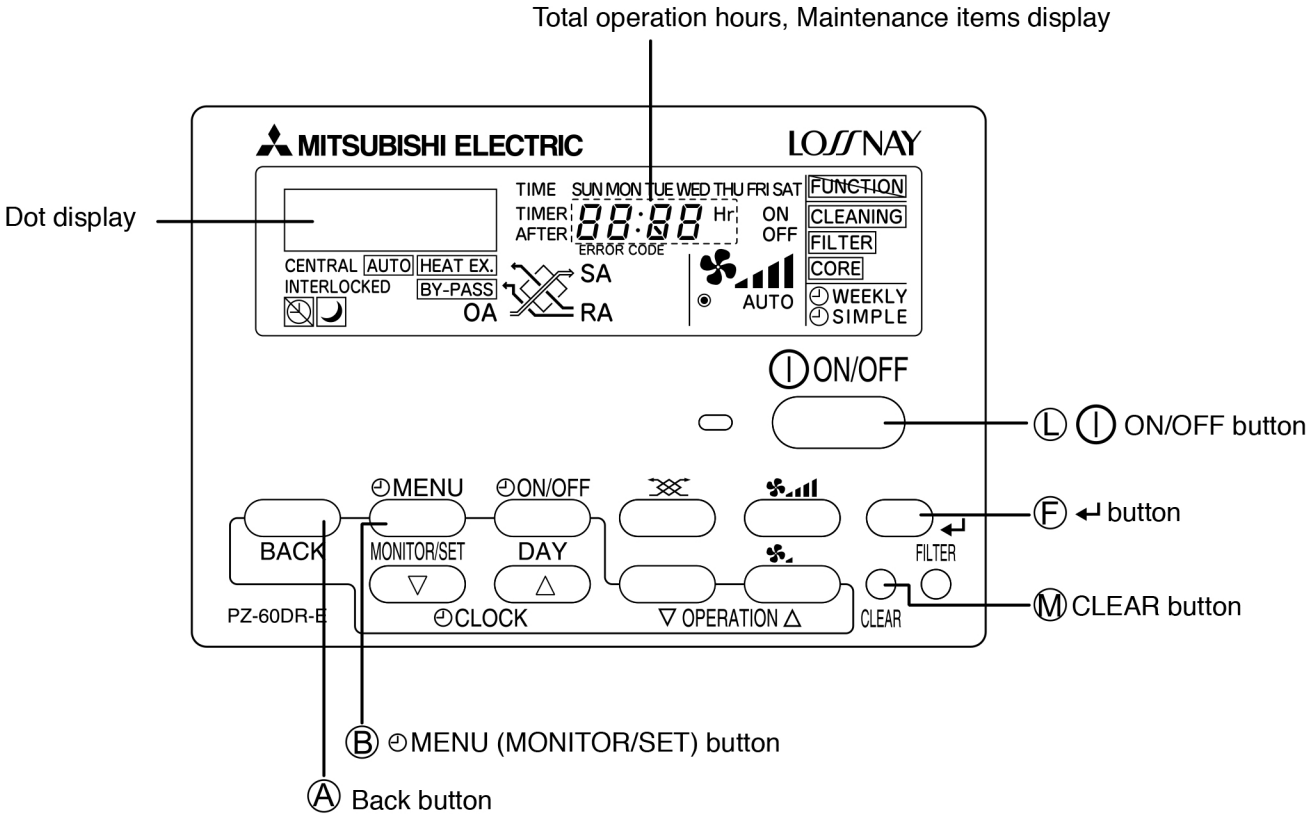

Major items	Intermediate items (Names)	Dot matrix display	Function	Notes
Total operation hours monitor	Total operation hours display	TOTAL HR OPERATION	Displays the total Lossnay operation hours. (The 10,000 and 100,000 hours digits are displayed in the air supply temperature display area)	*15
	Total operation hours of Lossnay ventilation display	TOTAL HR LOSSNAY	Displays the total operation hours when the damper is on the Lossnay side (Lossnay ventilation condition). (The 10,000 and 100,000 hours digits are displayed in the air supply temperature display area)	
Maintenance	Lossnay address switch condition	LOSSNAY ADDRESS	Displays the address switch condition of the “Main” Lossnay. (Example: 001 will be displayed when the address is number 01)	—
	Self diagnosis (Error history/Error history clear)	SELF CHECK	Alternately displays at a 0.5 second interval the error number, generated attribute, and address as the latest error history stored with the remote controller. This displays the error number and the attribute when the address has not been set (i.e., address 00). “FFFF” will be displayed when the error history is not available.	*16
	Memory clearance	CLEAR MEMORY	Returns all of the remote controller settings and stored content to the factory setting. Hold down the “Clear” button of the remote controller. A change of the display from “rdy” to “End” will indicate the completion of memory clearance.	*17

*15: Performing the memory clearance operation of the maintenance mode will clear the total operation hours.
*16: Two presses of the remote controller “Clear” button during the self diagnosis display will clear the error history. Note also that performing the memory clearance operation of the maintenance mode will clear the error history.
*17: The setting content that is stored by the Lossnay unit will not be cleared; therefore, after executing memory clearance, use the remote controller to perform the function settings again.

(12) Operation sequence flowchart

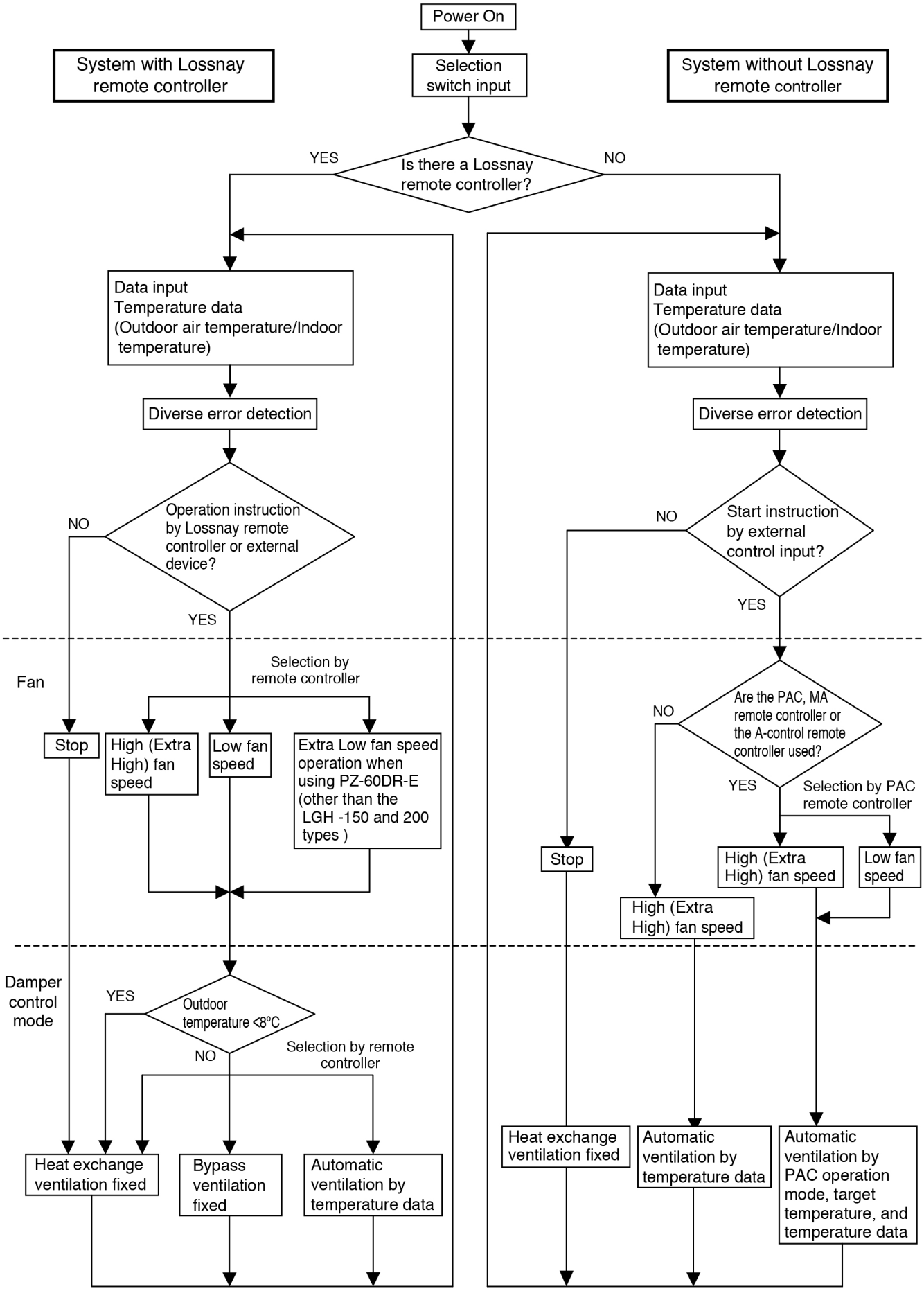

7. Troubleshooting

■ Work precautions

- When removing or touching a transformer, printed circuit board or other parts, make sure to turn off the power supply isolator.
- When removing the circuit board, always hold it at both ends and remove carefully so as not to apply force to the surface mounted parts.
- When removing the circuit board, be careful of the metal edges on the board.
- When removing or inserting the connectors for the circuit board, hold the entire housing section. Never pull on the lead wires.
- When servicing, be sure to recreate the malfunction two to three times before starting repairs.
- If it is thought that there is a printed circuit board malfunction, check for disconnected wires in the print pattern, burnt parts or discoloration.
- If the printed circuit board is replaced, make sure that the switch settings on the new board are the same as the old board.

✻ Part names used in the following text correspond to those listed in the parts catalog.

7-1 Service Flow

Confirmation items

① Condition of trouble – remote controller display, etc.
② Frequency of trouble – date of start of operation and occurrence
③ Occurrence timing
④ Existence of drawings, equipment (including controllers), cables, wiring, and settings.

Applicable models
Lossnay
LGH-15 to 200RX5-E

Remote controller
PZ-60DR-E
PZ-41SLB-E
PZ-52SF-E

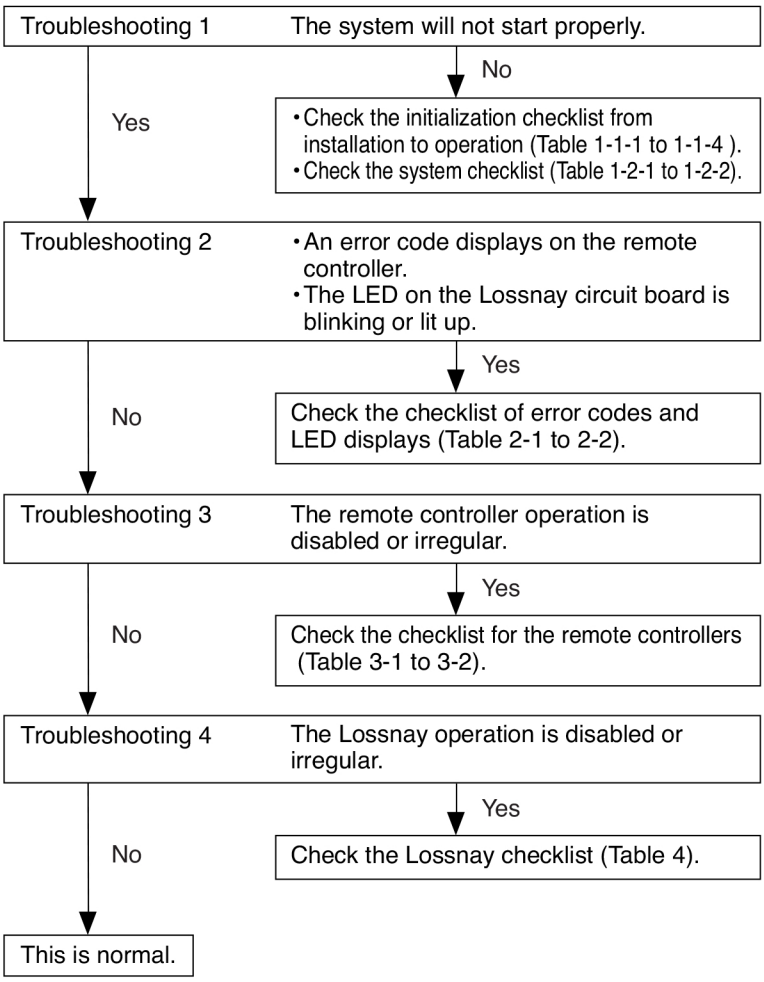

7-2 Checklist

(1)Troubleshooting 1: The system will not start properly.

Initialization checklist from installation to operation (Table 1-1)

After checking the system, verify the checkpoints listed below.

Power supply (Table 1-1-1)

No.	Checkpoint	Action
1	Is the main power supply on?	Turn on the main power supply.
2	Do the main power supply switching capacity and wiring diameter meet specification?	Use specified items.
3	Is the specified power supply of 220 to 240 V AC connected to the power supply terminal (TM1)?	Connect the specified power supply.
4	Has the fuse (FUSE 1) on the circuit board blown?	Replace the circuit board.
5	Are connector CN1 of the transformer primary and connector CN2 of the transformer secondary on the circuit board securely connected?	Connect them securely.
6	Is the power supply wiring incorrectly wired, or is there a faulty connection?	Make secure connections.
7	Is power display LED4 (red) on the circuit board unlit?	Check the above checkpoints.

Transmission cables (Table 1-1-2)

Check the following checkpoints when connecting with the remote controller, M-NET controller, or City Multi indoor units.

No.	Checkpoint	Action
1	Do the transmission cables meet regulations? (Type, diameter)	Use specified cables.
2	Is the transmission cable wired at least 5 cm away from the power supply cable?	Wire the transmission cable at least 5 cm away from the power supply cable.
3	Are multiple transmission or signal cables wired to the same power cable duct?	Wire the transmission cables away from the signal cables.
4	Are multiple transmission cables wired with multi core cables?	Using suitable cables, wire the transmission cables so that they are separated from one another.
5	Are the transmission cables securely connected to the terminals?	Connect them securely.
6	Are the transmission cables connected to the specified terminal blocks? Basic system (PZ-60DR-E, PZ-41SLB-E): TM4 ①, ② M-NET control: TAB5 Ⓐ, Ⓑ	Connect them to the specified terminal blocks.
7	Is the wiring length of the transmission cable within the regulations? Basic system (PZ-60DR-E, PZ-41SLB-E): Total extension within 500 m M-NET control: Maximum extension within 200 m, total extension within 500 m	Wire within the regulations. (See the technical manual for details about the regulations.)
8	Is the Main/Sub selection switch (SW1) on the Lossnay circuit board set correctly? When using one Lossnay unit: Set the unit to “Main”. When using multiple Lossnay units: Set the first unit to “Main” and the second and following units to “Sub”.	Set the switches correctly.
9	When using M-NET Is the address setting on the Lossnay circuit board (SA1, SA2) set to the correct number?	Make the setting so that the address does not duplicate that of other devices within M-NET control.
10	When PZ-60DR-E is not used, are the function selection switches (SW2, SW5) on the Lossnay circuit board set correctly?	Set the switches correctly to correspond with the application. (Refer to page 38 and 39)
11	When PZ-60DR-E is used, is the function selection set correctly?	Set it correctly to correspond with the application. (Refer to page 40 to 42)

Signal cables from external devices (Table 1-1-3)

Check the following checkpoints when connecting with level signal/pulse signal output devices, and Mr. Slim units.

No.	Checkpoint	Action
1	Do the transmission cables meet regulations? (Type, diameter)	Use specified cables.
2	Is the signal cable wired at least 5 cm away from the power supply cable?	Wire the signal cable at least 5 cm away from the power supply cable.
3	Are multiple transmission or signal cables wired to the same power cable duct?	Wire the transmission cables away from the signal cables.
4	Are multiple signal cables wired with multi core cables?	Using suitable cables, wire the signal cables so that they are separated from one another.
5	Are the signal cables securely connected to the terminals?	Connect them securely.
6	Are the signal cables connected to the specified terminal blocks? Mr. Slim control signal : TM2 ①, ② Charged signal : TM2 ①, ② Uncharged a-contact signal: TM2 ①, ③	Connect them to the specified terminal blocks.
7	Is the wiring length of the signal cable within the regulations? Mr. Slim control signal : Total extension within 500 m Charged signal : Within limitation of the external device Uncharged a-contact signal: Total extension within 500 m	Wire within the regulations.
8	Do the external signals meet specifications? Level signal: Charged 12 V DC/ 24 V DC, uncharged a-contact Pulse signal: Charged 12 V DC/ 24 V DC, uncharged a-contact (A pulse width of 200 ms or greater is required)	Input a signal that suits the specifications.
9	Are the type of input signal and the setting of the pulse input matched? Pulse signal : ON setting Other than pulse signal: OFF setting	<When using PZ-60DR-E> Check the pulse input setting from the function selection. (Refer to page 42) <When not using PZ-60DR-E> Check the setting of the pulse input switch (SW2-2) on the Lossnay circuit board. (Refer to page 38)
10	In a system with multiple Lossnay units, are the signal cables connected to the specified Lossnay unit? Basic system (PZ-60DR-E, PZ-41SLB-E): Lossnay unit for which the Main/Sub selection switch (SW1) is set to “Main” M-Net control: Lossnay unit that is set to the address with the smallest number within the group	Connect the signal cables to the specified Lossnay unit.
11	When PZ-60DR-E is not used, are the function selection switches (SW2, SW5) on the Lossnay circuit board set correctly?	Set the switches correctly to correspond with the application. (Refer to page 38 and 39)
12	When PZ-60DR-E is used, is the function selection set correctly?	Set it correctly to correspond with the application. (Refer to page 40 to 42)

Signal cables to external devices (Table 1-1-4)

Check the following checkpoints when outputting the operation monitor, air supply fan operation monitor, malfunction monitor, bypass operation monitor, and operation monitor with delay function.

<table>
<tr><th>No.</th><th>Checkpoint</th><th>Action</th></tr>
<tr><td>1</td><td>Do the signal cables meet regulations? (Type, diameter)</td><td>Use specified cables.</td></tr>
<tr><td>2</td><td>Is the signal cable wired at least 5 cm away from the power supply cable?</td><td>Wire the signal cable at least 5 cm away from the power supply cable.</td></tr>
<tr><td>3</td><td>Are multiple transmission or signal cables wired to the same power cable duct?</td><td>Wire the transmission cables away from the signal cables.</td></tr>
<tr><td>4</td><td>Are multiple signal cables wired with multi core cables?</td><td>Using suitable cables, wire the signal cables so that they are separated from one another.</td></tr>
<tr><td>5</td><td>Are the signal cables securely connected to the terminals?</td><td>Connect them securely.</td></tr>
<tr><td>6</td><td>Are the signal cables connected to the specified terminal blocks?
Operation monitor, operation monitor with delay function 1 : TM4 ⑨, ⑩
Malfunction monitor : TM3 ⑦, ⑧
Bypass operation monitor, operation monitor with delay function 2 : TM3 ⑥, ⑦</td><td>Connect them to the specified terminal blocks.</td></tr>
<tr><td>7</td><td>Are the output capacities of the operation monitor, malfunction monitor, and bypass operation monitor within the ratings?
<table>
<tr><th>Output</th><th>Maximum rating</th><th>Minimum rating</th></tr>
<tr><td>Operation monitor
Operation monitor with delay function 1</td><td>240 V AC 2 A
24 V DC 2 A</td><td>220 V AC 100 mA
5 V DC 100 mA</td></tr>
<tr><td>Malfunction monitor</td><td>240 V AC 1 A
24 V DC 1 A</td><td>220 V AC 100 mA
5 V DC 100 mA</td></tr>
<tr><td>Bypass operation monitor
Operation monitor with delay function 2</td><td>240 V AC 1 A
24 V DC 1 A</td><td>220 V AC 100 mA
5 V DC 100 mA</td></tr>
</table></td><td>Use within the ratings.</td></tr>
<tr><td>8</td><td>When using the operation monitor, is the setting of the output signal correct?</td><td><When using PZ-60DR-E>
Check the operation monitor setting from the function selection.
(Refer to page 41)
<When not using PZ-60DR-E>
Check the setting of the operation monitor (SW5-2) on the Lossnay circuit board. (Refer to page 38)</td></tr>
<tr><td>9</td><td>When using the operation monitor with delay function, is the setting of the output signal correct?</td><td>Check the settings of the TM4 ⑨, ⑩ output setting (SW2-8), and the TM3 ⑥, ⑦ output setting (SW5-6) on the Lossnay circuit board.
(Refer to page 38)</td></tr>
<tr><td>10</td><td>When PZ-60DR-E is not used, are the function selection switches (SW2, SW5) on the Lossnay circuit board set correctly?</td><td>Set the switches correctly to correspond with the application.
(Refer to page 38 and 39)</td></tr>
<tr><td>11</td><td>When PZ-60DR-E is used, is the function selection set correctly?</td><td>Set it correctly to correspond with the application.
(Refer to page 40 to 42)</td></tr>
</table>

System checklist (Table 1-2)

When using PZ-60DR-E, PZ-41SLB-E, or interlocking with external devices (Table 1-2-1)

No.	Error	Cause	Action
1	• Remote controller display does not appear. • The power display "◉" does not appear on the remote controller. • The remote controller continues to display "H0".	◯ Power is not supplied to the Lossnay, or power that does not follow specifications is used.	◯ Check the power supply to the Lossnay. (Refer to Table 1-1-1)
		◯ When using only one Lossnay, the Main/Sub switch (SW1) on the Lossnay circuit board is set to "Sub".	◯ Set the Main/Sub (SW1) switch to "Main".
		◯ The overall wiring length of the transmission cable is longer than specified (longer than 500 m).	◯ Check the length of the transmission cable wiring.
		◯ Is there a connection of 3 or more remote controllers, or 16 or more Lossnay units?	◯ Check the number of units connected.
		◯ The remote controller is connected to TB5 (terminal block for M-NET transmission cable).	◯ Connect the transmission cable to TM4 ①, ②.
		◯ PZ-52SF-E (Lossnay remote controller for M-NET) is connected to the Lossnay remote controller.	◯ Change to the PZ-60DR-E or PZ-41SLB-E remote controller.
2	Remote controller does not operate. (Communication error display)	◯ When using multiple Lossnay units, the Main/Sub switch (SW1) on the Lossnay circuit board of the second or following unit is set to "Main."	◯ Set the Main/Sub switch (SW1) of the second and following Lossnay units to "Sub".
		◯ The overall wiring length of the transmission cable is longer than specified (longer than 500 m).	◯ Check the length of the transmission cable wiring.
		◯ Multiple transmission cables are wired with multi core cables.	◯ Using suitable cables, wire the transmission cables so that they are separated from one another.
		◯ When two remote controllers are used, are PZ-60DR-E and PZ-41SLB-E being used together?	◯ Use the same type of remote controller.
3	Interlock operation with external device does not occur.	◯ Is the specified power being supplied to the Lossnay unit?	◯ Refer to Table 1-1-1.
		◯ Are the signal cables from the external devices wired according to regulations?	◯ Refer to Table 1-1-3.
		◯ The type of external signal does not match the connected terminal unit (charged, uncharged, serial signal).	◯ Check the type of external signal and the connections between the external signal and external control input terminal (TM2).
		◯ The type of external signal does not match the pulse input setting (level signal, pulse signal).	◯ <When using PZ-60DR-E> Check the type of external signal and verify the pulse input setting from the function selection. (Refer to page 42) <When not using PZ-60DR-E> Check the type of external signal and the setting of the pulse input switch (SW2-2) on the Lossnay circuit board. (Refer to page 38).
		◯ The external device signal is not being input.	◯ Check the external device.
		◯ The external device and signal cable wiring is longer than specified. 12 V DC, 24 V DC: Longer than limitations of external device Uncharged a-contact: Longer than 500 m Mr. Slim signal: Longer than 500 m	◯ Check the length of the signal cable wiring.
		◯ "DELAY OPERATION 'ON'" (PZ-60DR-E) or "Delay time" (PZ-41SLB-E) is set. (When using PZ-60DR-E, during the delay operation, LED1 (green) on the Lossnay circuit board will be lit.)	◯ Check the Delay operation setting with the remote controller (PZ-60DR-E or PZ-41SLB-E).

No.	Error	Cause	Action
3	Interlock operation with external device does not occur.	◯ The interlock mode is set to “ON Interlocked” or “OFF Interlocked” with the remote controller (PZ-60DR-E).	◯ Check the Interlock mode setting with the remote controller (PZ-60DR-E). (Refer to page 32)
		◯ The interlock mode is set to “2” (ON Interlocked) or “3” (OFF Interlocked) with PZ-41SLB-E.	◯ Check the Interlock mode setting with the remote controller (PZ-41SLB-E). (Refer to page 32)
		◯ When not using PZ-60DR-E and PZ-41SLB-E, the delay setting switch (SW5-1) on the Lossnay circuit board is set to ON. (During the delay operation, LED1 (green) on the Lossnay circuit board will be lit.)	◯ Check the setting of the delay setting switch (SW5-1) on the Lossnay circuit board. (Refer to page 38)
		◯ When not using PZ-60DR-E and PZ-41SLB-E, the interlock mode setting switches (SW5-7, SW5-8) on the Lossnay circuit board are set to “ON Interlocked” or “OFF Interlocked”.	◯ Check the setting of the interlock mode setting switch (SW5-7, SW5-8) on the Lossnay circuit board. (Refer to page 38)
		◯ When using multiple Lossnay units, the external control input signal is connected to a unit set to “Sub”.	◯ Connect the external control input signal to the Lossnay unit set to “Main.”
		◯ Remote/local switching (CN32) is used.	◯ When interlocked with external devices, remote/local switching (CN32) cannot be used.

Note: When two remote controllers are used, the combination of the PZ-60DR-E and PZ-41SLB-E cannot be used.

System checklist when using the M-NET (Table 1-2-2)

No.	Error	Cause	Action
1	Lossnay does not interlock with City Multi indoor unit. (Lossnay cannot be operated by the ventilation button on the ME remote controller, MA remote controller or MELANS.)	◯ Lossnay is not set for interlock operation, or is set for interlock operation at the wrong address.	◯ Check the Lossnay address, and set for an address corresponding to interlock operation.
		◯ The length of the M-NET transmission cable wiring from the outdoor unit or the system’s overall wiring length is longer than specified. (Longer than 200 m from the outdoor unit, longer than 500 m between ends.)	◯ Check the length of the transmission cable wiring. (See the technical manual for details about the regulations.)
		◯ PZ-41LSB-E is connected to Lossnay.	◯ Change to the PZ-60DR-E or PZ-52SF-E remote controller. (PZ-41SLB-E cannot be used with the M-NET.)
2	Cannot operate using MELANS or the Lossnay remote controller.	◯ The address that has been set for the group in MELANS and the address for the Lossnay are different.	◯ Check the registered address in MELANS.
		◯ The length of the M-NET transmission cable wiring from the power supply unit or the system’s overall wiring length is longer than specified. (Longer than 200 m from the power supply unit, longer than 500 m between ends.)	◯ Check the length of the transmission cable wiring. (See the technical manual for details about the regulations.)
		◯ PZ-41LSB-E is connected to Lossnay.	◯ Change to the PZ-60DR-E or PZ-52SF-E remote controller. (PZ-41SLB-E cannot be used with the M-NET.)
3	A Lossnay unit should operate independently by MELANS or the Lossnay remote controller, but it interlocks with different City Multi units.	◯ It has been set for interlock operation with the City Multi units.	◯ Cancel the interlock operation setting.

No.	Error	Cause	Action
4	Cannot perform group settings for the Lossnay using MELANS, ME remote controller, or MA remote controller. (The remote controller displays “88” at the time of registration.)	◯ Power is not supplied to Lossnay, or power that does not follow specifications is used. ◯ The M-NET transmission cable is connected to TM4 ①, ②. ◯ The transmission cable is not properly connected to MELANS or City Multi. ◯ The length of the transmission cable wiring is longer than specified (longer than maximum 200 m from the power supply unit, longer than 500 m between ends). ◯ Lossnay address setting (SA1, SA2) is wrong.	◯ Check the power supply to Lossnay and perform the registration again. ◯ Connect the transmission cable to TB5 Ⓐ, Ⓑ. ◯ Check the transmission cable connection. ◯ Check the length of the transmission cable wiring. (See the technical manual for details about the regulations.) ◯ Check the setting of the address setting switches (SA1, SA2) on the Lossnay circuit board.
5	When power is supplied to the system, the Lossnay remote controller PZ-52SF-E continues to display “HO” and does not start. (Group registration information is erased.)	◯ In a system connected to MELANS, the group setting was performed from the Lossnay remote controller PZ-52SF-E. ◯ The length of the transmission cable wiring is longer than specified (longer than maximum 200 m from the power supply unit, longer than 500 m between ends).	◯ In a system connected to MELANS, perform the group setting with the MELANS. (Do not perform the group setting with PZ-52SF-E.) ◯ Check the length of the transmission cable wiring. (See the technical manual for details about the regulations.)
6	When power is supplied to the system, the display of PZ-52SF-E goes blank and the system does not start.	◯ The restricted number of connected PZ-52SF-E units have been exceeded. ◯ The length of the transmission cable wiring is longer than specified (longer than maximum 200 m from the power supply unit, longer than 500 m between ends).	◯ Check the restricted number of remote controller units when using the power supply unit. (See the technical manual for details.) ◯ Check the length of the transmission cable wiring. (See the technical manual for details about the regulations.)
7	The power display “◉” does not appear on the remote controller when power is supplied to the system.	◯ When using the Lossnay units connected to indoor unit transmission cable side and Lossnay M-NET remote controllers: ①PZ-52SF-E is not correctly connected to the transmission cables of the indoor units. ②The outdoor unit is not turned on. ③The length of transmission cable wiring from the outdoor units is longer than specified (longer than 200 m). ◯ When using a power supply unit ①The power supply unit is not connected with the transmission cable. ②The power supply unit is not turned on. ③The length of the M-NET transmission cable wiring from the power supply unit is longer than specified (longer than 200 m). ◯ The transmission cable power supply restrictions have been exceeded.	① Check the transmission cable connection. ② Check the power of the outdoor unit. ③ Check the length of the transmission cable wiring. (See the technical manual for details about the regulations.) ① Connect the power supply unit with the transmission cable. ② Check the power of the power supply unit. ③ Check the length of the transmission cable wiring. (See the technical manual for details about the regulations.) ◯ Make connections within the transmission cable power supply restrictions of the outdoor units, or the power supply units. (See the technical manual for details about the restrictions.)

No.	Error	Cause	Action
8	The remote controller PZ-52SF-E continues to blink “HO” when the power is supplied to the system.	◯ The specified power is not supplied to Lossnay.	◯ Check the power to Lossnay.
		◯ Group setting of the PZ-52SF-E address has not been performed with MELANS.	◯ Check the address registration of PZ-52SF-E with MELANS (“HO” displays for 3 to 10 minutes when power is supplied to the system).
		◯ Group setting has been performed with PZ-52SF-E.	
		◯ The M-NET transmission cable is connected to TM4 ①, ②.	◯ Connect the transmission cable to TB5 Ⓐ, Ⓑ.
		◯ For a Lossnay individual system with no MELANS, Lossnay registration has not been performed by PZ-52SF-E.	◯ Check the Lossnay registration with PZ-52SF-E.
		◯ Lossnay address setting (SA1, SA2) is wrong.	◯ Verify the address (SA1, SA2) and register them again.
		◯ Lossnay address setting (SA1, SA2) was changed.	
		◯ The transmission cable power supply restrictions have been exceeded.	◯ Make connections within the transmission cable power supply restrictions of the outdoor units, or the power supply units. (See the technical manual for details about the restrictions.)
		◯ Group setting has not been performed after replacement of the circuit board.	◯ Perform group setting again.
9	“LC 6608” appears on the remote controller and the Lossnay does not operate.	◯ PZ-60DR-E is connected to the terminal block (TB5 Ⓐ, Ⓑ) for the M-NET transmission cable.	◯ When using PZ-60DR-E, connect to the terminal block (TM4 ①, ②) for the remote controller transmission cable.
		◯ Rather than PZ-52SF-E, PZ-41SLB-E is connected to the M-NET transmission cable.	◯ Change to the PZ-60DR-E or PZ-52SF-E remote controller. (PZ-41SLB-E cannot be used with the M-NET.)
10	The operation from MELANS and Lossnay operation differ.	◯ PZ-41SLB-E is connected to Lossnay.	◯ Change to the PZ-60DR-E or PZ-52SF-E remote controller. (PZ-41SLB-E cannot be used with the M-NET.)
		◯ PZ-60DR-E is connected by crossover cable with multiple Lossnay units of a separate group.	◯ Do not connect PZ-60DR-E with multiple Lossnay units of a separate group.

Note: PZ-60DR-E and PZ-52SF-E cannot be used in the same group.

(2)Troubleshooting 2

●An error code displays on the remote controller.

●The LED on the Lossnay circuit board is blinking or lit up.

An error code displayed on the remote controller (PZ-60DR-E, PZ-41SLB-E, PZ-52SF-E) or the M-NET controller, and blinking or illumination of LED1 (green) or LED2 (red) on the circuit board shows the type of error. The LED blink interval is 0.25 seconds for both on and off. The display duration is approximately 5 seconds.

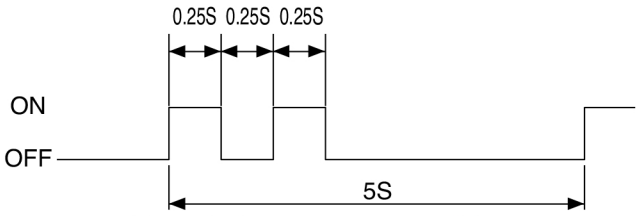

Error display example: (Two blinks)

Checklist of error codes displayed on the PZ-60DR-E (when not using M-NET) or PZ-41SLB-E, and LED displays (Table2-1)

Error code	LED1 (green)	LED2 (red)	Error	Cause	Action
LC 6608	—	—	Lossnay communication error	◯ When using multiple Lossnay units, the Main/Sub setting has not been made for the second unit and following units. ◯ Multiple transmission cables are wired using multi core cables. ◯ Transmission cable and power cable are too close. ◯ Transmission cable is not securely connected. ◯ The length of the transmission cable wiring is longer than specified (longer than 500 m).	◯ Turn off the main power supply and set the Main/Sub selection switch (SW1) (first unit to "Main", second and following units to "Sub"). ◯ Using suitable cables, wire the transmission cables so that they are separated from one another. ◯ Wire the transmission cable at least 5 cm away from the power supply cable. ◯ Check the transmission cable connection. ◯ Check the length of the transmission cable wiring.
RC6608 SRC 6608	—	—	Communication error between remote controllers (when two remote controllers are connected)	◯ Multiple transmission cables are wired using multi core cables. ◯ Transmission cable and power supply cable are too close. ◯ Transmission cable is not securely connected. ◯ The length of the transmission cable wiring is longer than specified (longer than 500 m).	◯ Using suitable cables, wire the transmission cables so that they are separated from one another. ◯ Wire the transmission cable at least 5 cm away from the power supply cable. ◯ Check the transmission cable connection. ◯ Check the length of the transmission cable wiring.
RC 6201,6202 SRC 6201,6202	—	—	Remote controller error	◯ The remote controller has broken down.	◯ Replace the remote controller.
LC 0900 SLC 0900	—	—	Lossnay trial operation	◯ Trial operation switch on the Lossnay circuit board (SW2-1) is set to ON.	◯ Check the trial operation switch. (Refer to page 38)
LC 3126 SLC 3126	8 blinks	—	External device error	◯ When the TM3 ⑥, ⑦ output setting switch (SW5-6) is ON, the following conditions are applied. • OA temperature is still -10°C or lower, 60 minutes after the output started • OA temperature is 15°C or higher within 15 minutes after the output started • OA temperature is 70°C or higher	◯ When external devices are connected, check the external devices. ◯ When external devices are not connected, check the TM3 ⑥, ⑦ output setting switch (SW5-6). (Refer to page 38)

Error code	LED1 (green)	LED2 (red)	Error	Cause	Action
LC 3602 SLC 3602	3 blinks	—	Damper related error	◯ Damper board operation is not correct. ◯ Connectors for the damper unit are not correctly connected. ◯ The switch (SW5-10) setting is incorrect.	◯ Remove the rod, and check whether the damper board can be moved manually. ◯ Check the connection of the lead wire connectors and the circuit connector. ◯ Check the switch (SW5-10) setting. (Refer to page 39) LGH-15 to 100 types: OFF LGH-150 and 200 types: ON
LC 4116 SLC 4116	2 blinks	—	Fan motor operation drive error *1	◯ The Lossnay fan does not stop due to a breakdown of the fan motor operation drive of the circuit board. ◯ Fan motor error	◯ Check and replace the circuit board. ◯ Check and replace the fan motor.
LC 5101 SLC 5101	4 blinks	—	OA thermistor related error	◯ Connectors for the thermistor are not correctly connected.	◯ Check the connection of the lead wire connectors and the circuit connectors.
LC 5102 SLC 5102	5 blinks	—	RA thermistor related error	◯ Connectors for the thermistor are not correctly connected.	◯ Check the connection of the lead wire connectors and the circuit connectors.
———	9 blinks	—	Remote controller communication error	◯ No Lossnay unit is set to “Main”. ◯ Multiple transmission cables are wired using multi core cables. ◯ Transmission cable and power supply cable are too close. ◯ Transmission cable is not securely connected. ◯ The length of the transmission cable wiring is longer than specified (longer than 500 m).	◯ Turn off the main power, and set the Main/Sub selection switch (SW1). (Set the first unit to “Main” and the second and following units to “Sub”.) ◯ Using suitable cables, wire the transmission cables so that they are separated from one another. ◯ Wire the transmission cable at least 5 cm away from the power supply cable. ◯ Check the transmission cable connection. ◯ Check the length of the transmission cable wiring.
“CLEANING” “FILTER” blinking	—	—	Filter cleaning warning according to total hours of operation	◯ It is time to clean the Lossnay air filter.	◯ After cleaning the air filter, press the “FILTER” button of the remote controller two times.
“CLEANING” “CORE” blinking	—	—	Lossnay core cleaning warning according to total hours of operation (PZ-60DR-E)	◯ It is time to clean the Lossnay core.	◯ After cleaning the Lossnay core, press the “FILTER” button of the remote controller two times.
“PLEASE WAIT” blinking	blinking	—	System is starting (PZ-60DR-E)	◯ LED1 blinks at 1 second intervals during starting operation (maximum of 45 seconds).	◯ This is not an error.
“HO” blinking	blinking	—	System is starting (PZ-41SLB-E)	◯ LED1 blinks at 1 second intervals during starting operation (maximum of 45 seconds).	◯ This is not an error.
———	Lit	—	In delay operation	◯ “DELAY OPERATION ‘ON’” is set from PZ-60DR-E. ◯ Delay setting switch (SW5-1) on the Lossnay circuit board is set to ON.	◯ This is not an error. ◯ This is not an error.
———	—	Lit	No M-NET connection information	◯ LED2 will be lit when M-NET is not used.	◯ This is not an error.

Note: LC: “Main” Lossnay SLC: “Sub” Lossnay RC, SRC: remote controller (PZ-60DR-E or PZ-41SLB-E)

*1 The LGH-150 and 200 types do not display errors.

Checklist of error codes displayed on PZ-60DR-E (when using M-NET), PZ-52SF-E or M-NET controllers, and LED displays(Table2-2)

Error code	LED1 (green)	LED2 (red)	Error	Cause	Action
6600	—	6 blinks	Multiple address error	◯ There is another unit with the same address setting.	◯ Check the addresses of devices in the system.
6607 6608	—	8 blinks	No ACK error *2 No answer error (M-NET communication error)	◯ Power is not supplied to Lossnay. ◯ Lossnay address was changed. ◯ Multiple transmission cables are wired using multi core cables. ◯ Transmission cable is not securely connected. ◯ The length of the transmission cable wiring is longer than specified (longer than maximum extension 200 m, longer than 500 m between ends).	◯ Check the power supply to Lossnay. ◯ Check the Lossnay address. ◯ Using suitable cables, wire the transmission cables so that they are separated from one another. ◯ Check the transmission cable connection. ◯ Check the length of the transmission cable wiring. (See the technical manual for details about the regulations.)
0900	—	—	Lossnay trial operation	◯ Trial operation switch on the Lossnay circuit board (SW2-1) is set to ON.	◯ Check the trial operation switch. (Refer to page 38)
3126	8 blinks	—	External device error	◯ When the TM3 ⑥, ⑦ output setting switch (SW5-6) is ON, the following conditions are applied. • OA temperature is still -10°C or lower, 60 minutes after the output started • OA temperature is 15°C or higher within 15 minutes after the output started • OA temperature is 70°C or higher	◯ When external devices are connected, check the external devices. ◯ When external devices are not connected, check the TM3 ⑥, ⑦ output setting switch (SW5-6). (Refer to page 38)
3602	3 blinks	—	Damper related error	◯ Damper board operation is not correct. ◯ Connectors for the damper unit are not correctly connected. ◯ The switch (SW5-10) setting is incorrect.	◯ Remove the rod, and check whether the damper board can be moved manually. ◯ Check the connection of the lead wire connectors and the circuit connector. ◯ Check the switch (SW5-10) setting. (Refer to page 39) LGH-15 to 100 types: OFF LGH-150 and 200 types: ON
4116	2 blinks	—	Fan motor operation drive error *1	◯ The Lossnay fan does not stop due to a breakdown of the fan motor operation drive of the circuit board. ◯ Fan motor error	◯ Check and replace the circuit board. ◯ Check and replace the fan motor.
5101	4 blinks	—	OA thermistor related error	◯ Connectors for the thermistor are not correctly connected.	◯ Check the connection of the lead wire connectors and the circuit connectors.
5102	5 blinks	—	RA thermistor related error	◯ Connectors for the thermistor are not correctly connected.	◯ Check the connection of the lead wire connectors and the circuit connectors.
6602 6604	—	1 to 4 blinks	communication circuit section error	◯ Controller where error originally occurred is defective. ◯ Lossnay circuit board is defective.	◯ Check the controller where the error occurred. ◯ Replace the circuit board.
6603	—	5 blinks	Transmission cable error	◯ Power is supplied to the same transmission cable from two or more power supply units. ◯ The power supply unit is connected to the TB3 side of the power supply expansion unit. ◯ The power supply unit is connected to the indoor and outdoor transmission cables.	◯ Adjust the wiring of the power supply unit.

Error code	LED1 (green)	LED2 (red)	Error	Cause	Action
6801	9 blinks	—	PZ-60DR-E communication error	◯ When using multiple Lossnay units, the Main/Sub setting has not been made for the second unit and following units. ◯ Multiple transmission cables are wired using multi core cables. ◯ Transmission cable and power cable are too close. ◯ Transmission cable is not securely connected. ◯ The length of the transmission cable wiring is longer than specified (longer than 500 m).	◯ Turn off the main power supply and set the Main/Sub selection switch (SW1) (first unit to "Main", second and following units to "Sub"). ◯ Using suitable cables, wire the transmission cables so that they are separated from one another. ◯ Wire the transmission cable at least 5 cm away from the power supply cable. ◯ Check the transmission cable connection. ◯ Check the length of the transmission cable wiring.
"CLEANING" "FILTER" blinking	—	—	Filter cleaning warning according to total hours of operation	◯ It is time to clean the Lossnay air filter.	◯ After cleaning the air filter, press the "FILTER" button of the remote controller two times.
"CLEANING" "CORE" blinking	—	—	Lossnay core cleaning warning according to total hours of operation (PZ-60DR-E)	◯ It is time to clean the Lossnay core.	◯ After cleaning the Lossnay core, press the "FILTER" button of the remote controller two times.
"PLEASE WAIT" blinking	blinking	—	System is starting (PZ-60DR-E)	◯ LED1 blinks at 1 second intervals during starting operation (maximum of 45 seconds).	◯ This is not an error.
"HO" blinking	blinking	—	System is starting (PZ-52SF-E)	◯ LED1 blinks at 1 second intervals during starting operation (maximum of 45 seconds).	◯ This is not an error.
———	—	Lit	No M-NET connection information	◯ The Lossnay units have not been set to group setting (registration).	◯ Check the Lossnay address and confirm that the group setting has been made.
———	Lit	—	In delay operation	◯ "DELAY OPERATION 'ON'" is set from PZ-60DR-E. ◯ Delay setting switch (SW5-1) on the Lossnay circuit board is set to ON.	◯ This is not an error. ◯ This is not an error.

Note: The "LC" characters that are displayed simultaneously with the error code indicate the Lossnay attributes in the M-NET device.

*1 The LGH-150 and 200 types do not display errors.

*2 ACK: Acknowledgement signal from other communicating devices.

(3)Troubleshooting 3: The remote controller operation is disabled or irregular.

Checklist for PZ-60DR-E or PZ-41SLB-E (Table 3-1)

No.	Error	Cause	Action
1	Nothing displays on the LCD.	◯ Transmission cable is connected to the wrong terminal block.	◯ Check the transmission cable connection. (TM4 ①, ② for the transmission cable from the remote controller)
		◯ No Lossnay unit is set to “Main”.	◯ Turn off the main power supply and set the Main/Sub selection switch (SW1) (first unit to “Main”, and second and following units to “Sub”).
		◯ Power is not supplied to Lossnay.	◯ Check the power supply to Lossnay.
		◯ Power that does not follow specifications is used.	◯ Check the power supply.
		◯ Transmission cable is not securely connected.	◯ Check the transmission cable connection.
		◯ The length of the transmission cable wiring is longer than specified (longer than 500 m).	◯ Check the length of the transmission cable wiring.
2	Starts or stops, or the display changes, by itself.	◯ Multiple transmission cables are wired using multi core cables.	◯ Using suitable cables, wire the transmission cables so that they are separated from one another.
		◯ Transmission cable and power supply cable are too close.	◯ Wire the transmission cable at least 5 cm away from the power supply cable.
3	Displays an error code that is not in the check list.	◯ Liquid crystal display characters on the remote controller are missing.	◯ Replace the remote controller.
		◯ Poor return action of the remote controller buttons.	◯ Replace the remote controller.
4	Cannot stop the Lossnay with the remote controller. (“CENTRAL” is displayed)	◯ Operation of the remote controller has been prohibited by MELANS.	◯ Check the setting of the MELANS.
		◯ “INTERLOCK MODE” is set to “oUT” (external input given priority).	◯ Check the interlock mode setting. (Refer to page 32)
		◯ Remote/local switching (CN32) is set to “Remote.”	◯ Check the remote/local switching (CN32). (Refer to page 35)
5	Cannot stop the Lossnay with PZ-60DR-E. (“24HR VENTILATION” is displayed).	◯ 24-hour ventilation is set to “on” with the PZ-60DR-E function selection.	◯ Check the 24-hour ventilation setting with the PZ-60DR-E function selection. (Refer to page 40)
6	Cannot switch fan speed with the remote controller.	◯ High/Low/Extra Low fan speed switching external input (CN16) is ON.	◯ Check the High/Low/Extra Low fan speed switching input (CN16). (Refer to page 33 and 34)
		◯ When using PZ-60DR-E, “POWER VENT START” is set to “on” with the function selection of the remote controller.	◯ Check the setting of “power supply/exhaust when operation starts” with the PZ-60DR-E function selection. (Refer to page 41)
		◯ When not using PZ-60DR-E, the function selection switch for “Power supply/exhaust when operation starts” (SW2-3) on the Lossnay circuit board is set to ON.	◯ Check the function selection switch (SW2-3). (Refer to page 38)
		◯ When using PZ-60DR-E, the supply fan speed setting and the exhaust fan speed setting are set to “L” with the function selection of the remote controller.	◯ Check the supply fan speed setting and the exhaust fan speed setting with the PZ-60DR-E function selection. (Refer to page 41)
		◯ When not using PZ-60DR-E, the function selection switches for “Supply fan fixed at Low speed”, and “Exhaust fan fixed at Low speed” (SW2-4, SW2-5) on the Lossnay circuit board are set to ON.	◯ Check the function selection switches (SW2-4, SW2-5). (Refer to page 38)
		◯ In a mixture of the LGH-15 to 100 types and the LGH-150 and 200 types, the 150 and 200 types are set to “Main”. (Extra Low fan speed operation is not available.)	◯ Set the LGH-15 to 100 types to “Main” and the LGH-150 and 200 types to “Sub”. (Refer to page 39)

No.	Error	Cause	Action
7	The ventilation mode cannot be switched with the remote controller.	◯ The bypass ventilation switching external input (CN16) is set to ON.	◯ Check the bypass ventilation switching input (CN16). (Refer to page 35)
8	When the main power supply is turned on, the remote controller display will indicate and Lossnay will start.	◯ When using PZ-60DR-E, "RECOVERY SETTING" is set to "on" or "AUTo" with the function selection of the remote controller. ◯ When not using PZ-60DR-E, the function selection switch (SW2-6 or SW5-4) on the Lossnay circuit board is set to ON. ◯ When using PZ-41SLB-E, the main power supply was turned off during operation.	◯ Check the power supply ON/OFF/AUTO setting with the PZ-60DR-E function selection. (Refer to page 41) ◯ Check the function selection switch (SW2-6 or SW5-4). (Refer to page 38) ◯ When using PZ-41SLB-E, the operation prior to switching off the power will return when the main power supply is turned on. Switch off the main power supply approximately 10 seconds after Lossnay stop with the remote controller.
9	There is no power failure automatic return.	◯ When using PZ-60DR-E, "RECOVERY SETTING" is set to "oFF" with the function selection of the remote controller. ◯ When not using PZ-60DR-E, the function selection switch (SW5-4) on the Lossnay circuit board is set to ON.	◯ Check the power supply ON/OFF/AUTO setting with the PZ-60DR-E function selection. (Refer to page 41) ◯ Check the function selection switch (SW5-4) on the Lossnay circuit board. (Refer to page 38)
10	The fan does not stop even though the remote controller is set to stop.	◯ Operation monitor with delay function is set to ON. (Function selection switch SW2-8 or SW5-6 is set to ON)	◯ Check the function selection switch (SW2-8 or SW5-6). (Refer to page 38)
11	When using PZ-60DR-E, Lossnay starts or stops operating, or the fan speed changes, by itself.	◯ Timer function has been set with PZ-60DR-E. ◯ "NIGHT PURGE" is set to "on" with PZ-60DR-E.	◯ Check the timer function setting with PZ-60DR-E. ◯ Check the night purge setting of PZ-60DR-E. If enabled, this is not an error. (Refer to page 41)
12	When PZ-60DR-E is used, Lossnay does not operate in accordance with the timer setting.	◯ When a different timer has been set with each remote controller in a two remote controller system, the resultant operation will not be in accordance with the setting.	◯ Perform the timer setting with one remote controller only, and use the other remote controller as "(⊠ Timer off indicator)".
13	"CLEANING" "FILTER" / "CLEANING" "CORE" (PZ-60DR-E), or "FILTER" (PZ-41SLB-E) continues to blink and the display cannot be reset.	◯ The display is reset incorrectly. ◯ The remote controller has broken down.	◯ During Lossnay operation, press the "FILTER" button two times (within 3 seconds). ◯ Replace the remote controller.

Note: When two remote controllers are used, the combination of the PZ-60DR-E and PZ-41SLB-E cannot be used.

Checklist for PZ-52SF-E (Table 3-2)

No.	Error	Cause	Action
1	Nothing displays on the LCD.	◯ Transmission cable is connected to the wrong terminal block. ◯ There is no power supply unit (for Lossnay only systems). ◯ The power supply unit is not turned on. ◯ Transmission cable is not securely connected. ◯ Wiring length of the transmission cable from the power supply unit or the outdoor unit is longer than specified (maximum extension 200 m).	◯ Check the transmission cable connection (TB5Ⓐ,Ⓑ for M-NET transmission cables). ◯ Install the power supply unit. ◯ Check the power to the power supply unit. ◯ Check the transmission cable connection. ◯ Check the length of the transmission cable wiring. (See the technical manual for details about the regulations.)

No.	Error	Cause	Action
2	Continues to display “HO” and does not start.	◯ It is less than 10 minutes since the power was supplied to the system.	◯ After supplying power to the system, “HO” blinks for a maximum of about 10 minutes. (This is not an error.)
		◯ Group setting (registration) has not been performed.	◯ Perform the group setting (registration). If using MELANS, register with the MELANS. If there is only PZ-52SF-E, register with it.
		◯ The PZ-52SF-E address has not been registered in the group setting by MELANS.	◯ Check the group setting with the MELANS.
		◯ Power supply to the Lossnay is not turned on.	◯ Check the power supply to Lossnay.
		◯ Power that does not follow specifications is used.	◯ Check the power supply.
		◯ Transmission cable is connected to the wrong terminal of the Lossnay unit.	◯ Check the transmission cable connection (TB5Ⓐ,Ⓑ for M-NET transmission cables).
		◯ Lossnay address was changed.	◯ Check the Lossnay address.
		◯ Lossnay circuit board was replaced.	◯ If the circuit board has been replaced, perform the group settings again.
		◯ The length of the transmission cable wiring is longer than specified (longer than maximum extension 200 m, longer than 500 m between ends).	◯ Check the length of the transmission cable wiring. (See the technical manual for details about the regulations.)
3	Cannot register the Lossnay with PZ-52SF-E or MELANS.	◯ Power is not supplied to Lossnay.	◯ Check the power supply to Lossnay.
		◯ Power that does not follow specifications is used.	◯ Check the power supply.
		◯ Transmission cable to the Lossnay is not connected.	◯ Check the transmission cable connection.
		◯ Transmission cable is connected to the wrong terminal of the Lossnay unit.	◯ Check the transmission cable connection (TB5Ⓐ,Ⓑ for M-NET transmission cables).
		◯ Lossnay address was changed.	◯ Check the Lossnay address.
		◯ The length of the transmission cable wiring is longer than specified (longer than maximum extension 200 m, longer than 500 m between ends).	◯ Check the length of the transmission cable wiring. (See the technical manual for details about the regulations.)
4	Starts or stops, or the display changes, by itself.	◯ The Lossnay unit is set for interlock operation with City Multi.	◯ Cancel the interlock mode setting.
5	Displays an error code that is not in the checklist.	◯ Liquid crystal display characters on the remote controller are missing.	◯ Replace the remote controller.
6	Cannot stop Lossnay with the remote controller. (“CENTRAL” is displayed)	◯ Operation of the remote controller has been prohibited by MELANS.	◯ Check the settings of the MELANS.
		◯ “INTERLOCK MODE” is set to “oUT” (external input given priority).	◯ Check the interlock mode setting. (Refer to page 32)
		◯ Remote/local switching (CN32) is set to “Remote.”	◯ Check the remote/local switching (CN32). (Refer to page 35)

Note: PZ-60DR-E and PZ-52SF-E cannot be used in the same group.

(4)Troubleshooting 4: The Lossnay operation is disabled or irregular.

Lossnay checklist (Table 4)

No.	Error	Cause	Action
1	The fan does not operate. The fan does not operate normally.	◯ Connectors for the fan or connectors for the Lossnay circuit board section are not correctly connected.	◯ Check the lead wire connectors and the Lossnay circuit board section connectors.
		◯ Power is not supplied to the Lossnay, or power that does not follow specifications is used.	◯ Check the power supply.
		◯ When using M-NET, Lossnay group setting is not performed. (LED2 lights)	◯ Check the Lossnay address and the group setting. (LED2 lights when not using M-NET. This is not an error.)
2	Interlocked operation with external devices (air conditioners) does not occur.	◯ The type of external signal does not match the connected terminal block (charged, uncharged, Mr. Slim signal).	◯ Check the external signal type and the external control input terminal (TM2) connection.
		◯ The type of external signal does not match the pulse input setting (level signal, pulse signal).	◯ <When using PZ-60DR-E> Check the external signal type and the pulse input setting from the function selection. <When not using PZ-60DR-E> Check the external signal type and the pulse input setting switch (SW2-2) on the Lossnay circuit board. (Refer to page 31).
		◯ The external device signal is not being input.	◯ Check the external device.
		◯ The external device and signal cable wiring is longer than specified. 12 V DC, 24 V DC: Longer than limitations of external device Uncharged a-contact: Longer than 500 m Mr. Slim signal: Longer than 500 m	◯ Check the wiring length of the signal cable.
		◯ The Delay operation is set with the function selection of PZ-60DR-E or PZ-41SLB-E, or the function selection switch (SW5-1) on the Lossnay circuit board.	◯ Check the delay operation setting of PZ-60DR-E or PZ41SLB-E, and the function selection switch (SW5-1) on the Lossnay circuit board. (Refer to page 32)
		◯ The ON Interlocked or OFF Interlocked is set with the function selection of PZ-60DR-E or PZ-41SLB-E, or the function selection switches (SW5-7, SW5-8) on the Lossnay circuit board.	◯ Check the interlock mode setting of PZ-60DR-E, PZ41SLB-E, or the function selection switches (SW5-7, SW5-8) on the Lossnay circuit board. (Refer to page 32)
		◯ When using multiple Lossnay units, the external control input signal is connected to a “Sub” Lossnay.	◯ Connect the external control input signal to the “Main” Lossnay.
		◯ In a group of multiple Lossnay units with M-NET, the external control input signal is connected to a Lossnay unit other than the one with the smallest address.	◯ Connect the external control input signal to the Lossnay unit with the smallest address in the group.
		◯ There is a communication error with the remote controller or MELANS.	◯ Check the remote controller or MELANS.
3	Fan will not stop.	◯ Trial operation switch (SW2-1) on the Lossnay circuit board is set to ON.	◯ Check the trial operation switch (SW2-1). (Refer to page 36)
		◯ The TM4 ⑨, ⑩ output setting switch (SW2-8) or the TM3 ⑥, ⑦ output setting switch (SW5-6) on the Lossnay circuit board is set to ON.	◯ When SW2-8 or SW5-6 is ON, the fan will stop 3 minutes after OFF operation of the remote controller. (Refer to page 27)

No.	Error	Cause	Action
4	Lossnay operates when the main power is turned on.	◯ When using PZ-60DR-E, “RECOVERY SETTING” is set to “on” or “AUTo” with the function selection of the remote controller. ◯ When not using PZ-60DR-E, the function selection switches (SW2-6 or SW5-4) on the Lossnay circuit board are set to ON. ◯ When using PZ-41SLB-E, the main power supply was turned off during operation.	◯ Check the power supply ON/OFF/AUTO setting with the PZ-60DR-E function selection. (Refer to page 41) ◯ Check the function selection switches (SW2-6 or SW5-4) (Refer to page 38) ◯ When using PZ-41SLB-E, the operation prior to switching off the power will return when the main power supply is turned on. Switch off the main power supply approximately 10 seconds after Lossnay stop with the remote controller.
5	Takes in air from outdoors during interlocked operation with a Mr. Slim or a City Multi, but supply air fan does not stop when defrosting.	◯ The outdoor air intake setting of the PAC indoor unit or the PAC remote controller is not enabled.	◯ Set the outdoor air intake to “ON” with the indoor unit or the PAC remote controller.
6	The supply air fan and exhaust air fan both periodically stop operating.	◯ In a system that Lossnay has duct connections and interlocked with Mr. Slim or City Multi indoor units, when “EA SETTING DEFROST” is set to “oFF” with PZ-60DR-E, or when the function selection switch (SW5-3) on the Lossnay circuit board is ON, the fans will stop during air conditioner defrosting.	◯ Check the exhaust operation setting for air conditioner defrosting with the PZ-60DR-E function selection, or the function selection switch (SW5-3). (Refer to page 38 and 42)
7	Fan speed will not change.	◯ High/Low/Extra Low fan speed switching external input (CN16) is ON. ◯ When using PZ-60DR-E, “POWER VENT START” is set to “on” with the function selection of the remote controller. ◯ When not using PZ-60DR-E, the function selection switch for “Power supply/exhaust when operation starts” (SW2-3) on the Lossnay circuit board is set to ON. ◯ When using PZ-60DR-E, the supply fan speed setting and the exhaust fan speed setting are set to “L” with the function selection of the remote controller. ◯ When not using PZ-60DR-E, the function selection switches for “Supply fan fixed at Low speed”, and “Exhaust fan fixed at Low speed” (SW2-4, SW2-5) on the Lossnay circuit board are set to ON. ◯ Trial operation switch (SW2-1) on the Lossnay circuit board is set to ON. ◯ In a mixture of the LGH-15 to 100 types and the LGH-150 and 200 types, the 150 and 200 types are set to “Main”. (Extra Low fan speed operation is not available.)	◯ Check the High/Low/Extra Low fan speed switching input (CN16). (Refer to page 33 and 34) ◯ Check the setting of “power supply/exhaust when operation starts” with the PZ-60DR-E function selection. (Refer to page 41) ◯ Check the function selection switch (SW2-3). (Refer to page 38) ◯ Check the supply fan speed setting and the exhaust fan speed setting with the PZ-60DR-E function selection. (Refer to page 41) ◯ Check the function selection switches (SW2-4, SW2-5). (Refer to page 38) ◯ Check the trial operation switch (SW2-1). (Refer to page 38) ◯ Set the LGH-15 to 100 types to “Main” and the LGH-150 and 200 types to “Sub”. (Refer to page 39)

No.	Error	Cause	Action
8	The damper board does not operate.	◯ The outdoor air temperature is 8°C or lower. ◯ The bypass ventilation switching external input (CN16) is set to ON. ◯ During the night purge operation ◯ Damper board operation is not correct. ◯ Connectors for the thermistor are not correctly connected. ◯ Connectors for the damper are not correctly connected. ◯ The trial operation switch (SW2-1) on the Lossnay circuit board is turned ON.	◯ Check the outdoor air temperature. ◯ Check the bypass ventilation switching input (CN16). (Refer to page 35) ◯ Check the display of the PZ-60DR-E. (“☽” is displayed) ◯ Remove the rod, and check whether the damper board can be moved manually. ◯ Check the connections of the lead wire connectors and the circuit connectors. ◯ Check the connections of the lead wire connectors and the circuit connectors. ◯ Check the trial operation switch (SW2-1) on the Lossnay circuit board. (Refer to page 38)
9	Operation monitor output is OFF during operation.	◯ When the “OPERATION MONITOR” is set to “2” with the PZ-60DR-E function selection, or when the function selection switch (SW5-2) on the Lossnay circuit board is ON, because there is operation monitor output interlocked with the air supply fan, the operation monitor output will turn OFF when the outdoor temperature is -10°C or less, or at the time of air conditioner defrosting.	◯ Check the operation monitor output setting with the PZ-60DR-E function selection, or the function selection switch (SW5-2) on the Lossnay circuit board. (Refer to page 38 and 41)
10	Delay operation does not work even though Delay operation is set.	◯ Pulse input setting is set to ON.	◯ <When using PZ-60DR-E> Check the pulse input setting from the function selection. (Refer to page 42) <When not using PZ-60DR-E> Check the setting of the pulse input switch (SW2-2) on the Lossnay circuit board. (Refer to page 38).
11	Night purge operation does not work even though Night purge operation is set.	• The night purge conditions have not been satisfied. • Lossnay has been started or stopped during the display of “☽ (Night purge)”. • Night purge operation will not be performed when “CENTRAL” is displayed.	• Check whether these are the night purge operation conditions. (Refer to page 36 and 37) • When Lossnay has been started or stopped during the display of “☽”, the night purge operation will not be performed until 1:00 of the next day.
12	The fan does not stop even though the remote controller is set to stop.	◯ Operation monitor with delay function is set. (Function selection switch (SW2-8 or SW5-6) is set to ON)	◯ Check the setting of the function selection switch (SW2-8 or SW5-6). The fan will stop 3 minutes after the remote controller OFF operation. (Refer to page 27)
13	The damper board does not operate correctly.	◯ The switch (SW5-10) setting is incorrect.	◯ Check the switch (SW5-10) setting. LGH-15 to 100 types: OFF LGH-150 and 200 types: ON (Refer to page 39)

It is normal in the following cases.

No.	Error	Cause	Reference
1	Immediately after turning on the main power, LED1 (green) on the Lossnay circuit board blinks.	LED1 blinks at 1 second intervals during starting operation (maximum of 45 seconds).	Page 24
2	LED1 (green) on the Lossnay circuit board is lit.	LED1 will be lit during the delay operation when the delay operation setting is enabled.	Page 32
3	LED2 (red) on the Lossnay circuit board is lit.	LED2 will be lit when M-NET is not used.	Page 54
4	When PZ-60DR-E is used, the operation will not be in accordance with the setting of the function selection switch on the Lossnay circuit board.	As for the Lossnay function selection, the function selection setting by PZ-60DR-E will have priority.	Page 39 - 42
5	When PZ-60DR-E is used, button operations of the remote controller will result in a display of “NOT AVAILABLE”.	“NOT AVAILABLE” will be displayed in the following circumstances: • When the ““Extra Low” fan speed” button has been operated with the LGH-150 or 200 type connected. • When the “timer menu” button or the “timer on/off” button has been operated with timer function set to “TIMER MODE OFF”. • When the operation lock setting (i.e., pressing “FILTER” and “ON/OFF” buttons at the same time) has been performed with the “LOCKING FUNCTION” is set to “oFF”.	—
6	Button operations are not accepted immediately when the function selection mode or the maintenance mode is entered from the normal display of PZ-60DR-E, or when returning to the normal display from the function selection mode or the maintenance mode.	Button operations may not be accepted immediately depending on communication processing. When an operation has not been accepted, perform the operation after several seconds have passed.	—
7	“24 HR VENTILATION” is not displayed on the PZ-60DR-E function selection.	This is not displayed because the LGH-150 and 200 types do not have a 24 hour ventilation function.	—
8	When two PZ-60DR-E remote controllers are used, “24HR VENTILATION”, “LOSSNAY FUNCTION”, and “INTERLOCK SETTING” of the function selection mode can be set only from one of the remote controllers.	When two remote controllers are used, “24 HR VENTILATION”, “LOSNNAY FUNCTION”, and “INTERLOCK SETTING” can be set only with the “Main” remote controller. The “Main” and “Sub” remote controller will be determined automatically by communication when the main unit power is turned on. The remote controller on which “24HR VENTILATION”, “LOSSNAY FUNCTION”, and “INTERLOCK SETTING” are displayed is the “Main” remote controller.	Page 39
9	Even when the clock use setting is set to “on” with PZ-60DR-E, the day of the week and time are not displayed.	When “SIMPLE TIMER” has been set with the timer function setting, the day of the week and time are not displayed.	Page 40
10	When two PZ-60DR-E remote controllers are used, the display of the day of the week and time differs.	When a remote controller has been replaced or added, the day of the week and time display will not match; therefore, perform a day of the week and time setting with either one of the remote controllers.	—

No.	Error	Cause	Reference
11	When PZ-60DR-E is used, the timer operation does not work.	Timer operation does not work in the following circumstances: • When the timer function is set to OFF. • During the day of the week and time setting / During function selection / During timer setting • When “CENTRAL” is displayed.	—
12	When PZ-41SLB-E is used, the operation will not be in accordance with the setting of the function selection switch on the Lossnay circuit board.	The settings will be disabled for switches (SW2-6, SW5-1, SW5-4, SW5-5, SW5-7, and SW5-8).	Page 38
13	When PZ-60DR-E is used, “FUNCTION (“Locked” indicator)” is displayed, and the remote controller cannot be operated.	In the following circumstances “FUNCTION (“Locked” indicator)” is displayed, and the applicable function button cannot be operated.	Page
		• The operation lock is enabled. (Buttons other than the “ON/OFF” button, or all buttons)	40
		• When operating with the High / Low / Extra Low fan speed switching input (“Fan Speed Adjustment” button, and “Extra Low fan speed” button)	33, 34
		• When operating with the bypass ventilation switching input. (“Function selector” button)	35
		• During the night purge operation. (“Function selector” button)	36, 37
		• When two remote controllers are used, one of the remote controllers is set to the function selection mode or the maintenance mode. (All buttons)	40 - 43
14	The supply air fan periodically stops operating.	• When the outdoor temperature is -10°C or lower, the fan is periodically stopped for approximately 10 minutes to prevent freezing of the Lossnay core. (Cold region specifications) • When the Lossnay unit has duct connections and interlocked with Mr. Slim or City Multi indoor units, the fan will stop during air conditioner defrosting.	Page 27
15	The Lossnay unit starts by itself at night.	When the night purge setting is set to “on”, the night purge operation will be performed at nighttime.	Page 36, 37
16	Night purge operation does not work even though Night purge operation is set.	The night purge operation will not be performed in the following circumstances: • The night purge conditions have not been satisfied. • Lossnay has been started or stopped during the display of “ (Night purge)”. • Night purge operation will not be performed when “CENTRAL” is displayed.	Page 36, 37
17	Damper board does not operate.	When switching the ventilation mode with the remote controller, a maximum delay of 30 seconds will be generated depending on the timing.	Page 29
18	Delay operation does not work even though Delay operation is set.	• Delay operation will not start until 2 hours after the Lossnay stopped. • When the pulse input setting is set to “on”, delay operation will not start. • When using PZ-60DR-E and PZ-41SLB-E, operation will be according to the setting of the remote controller.	Page 32
19	Operation monitor output will not be output until several seconds after the fan started operation.	When the TM4 ⑨, ⑩ output setting is set to operation monitor with delay function 1 (SW2-8 is ON), the operation monitor will be output 10 seconds after the fan started operation.	Page 33
20	After operation has been stopped with the remote controller, the fan continues to run for a while.	When the TM4 ⑨, ⑩ output setting is set to operation monitor with delay function 1 (SW2-8 is ON), or when the TM3 ⑥, ⑦ output setting is set to operation monitor with delay function 2 (SW5-6 is ON), the fan will stop 3 minutes after stop with the remote controller.	Page 27

Temperatures and thermistor resistance table

Temperature (°C)	Resistance value (kΩ)	Temperature (°C)	Resistance value (kΩ)	Temperature (°C)	Resistance value (kΩ)	Temperature (°C)	Resistance value (kΩ)	Temperature (°C)	Resistance value (kΩ)
-30	53.9 - ∞	-7	18.0	8	9.5	23	5.4	38	3.1
⋮	⋮	-6	17.2	9	9.2	24	5.1	39	3.1
-20	32.8	-5	16.5	10	8.8	25	5.0	40	3.0
-19	31.2	-4	15.7	11	8.5	26	4.8	41	2.8
-18	29.8	-3	15.1	12	8.1	27	4.7	42	2.7
-17	28.4	-2	14.5	13	7.8	28	4.5	43	2.7
-16	27.1	-1	13.8	14	7.6	29	4.3	44	2.6
-15	25.8	0	13.3	15	7.3	30	4.2	45	2.5
-14	24.7	1	12.8	16	7.0	31	4.0	46	2.4
-13	23.6	2	12.2	17	6.7	32	3.9	47	2.3
-12	22.5	3	11.7	18	6.5	33	3.7	48	2.2
-11	21.5	4	11.2	19	6.3	34	3.6	49	2.2
-10	20.6	5	10.7	20	6.0	35	3.5	50	2.1
-9	19.7	6	10.3	21	5.8	36	3.4	⋮	⋮
-8	18.8	7	10.0	22	5.6	37	3.2	90	0 - 0.7

8. Disassembly and assembly

■ Work precautions

- When touching the electric components such as circuit boards and fan motors, do not touch the components for more than 5 minutes after power-off, and then start working.
- Before replacing parts, repair troubled sections according to the instructions described in the troubleshooting.
- When servicing, always keep proper footing.
- When servicing, make sure that the power cord is pulled out of the outlet, or the power supply isolator is off if no mains connector is built in the product, so as no electrical shock or injury to occur. Pay sufficient attention when working on the product.
- Always connect the power wire properly.
- After completing repairs, confirm that the main unit operates normally.

✻ Part names used in the following text correspond to those listed in the parts catalog.

The following pictures show LGH-50RX5-E.

(1) Turning power off

① Shut down the unit.
② Turn off the power supply isolator on the distribution board.

(2) Fan parts

① Pull out the hinge, and open the maintenance cover.

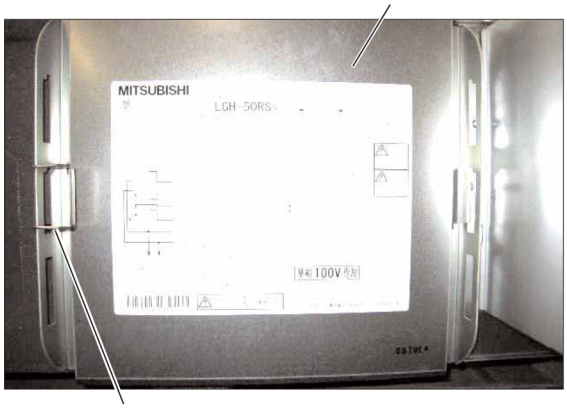

② Draw the Lossnay cores (with filters) from the unit.

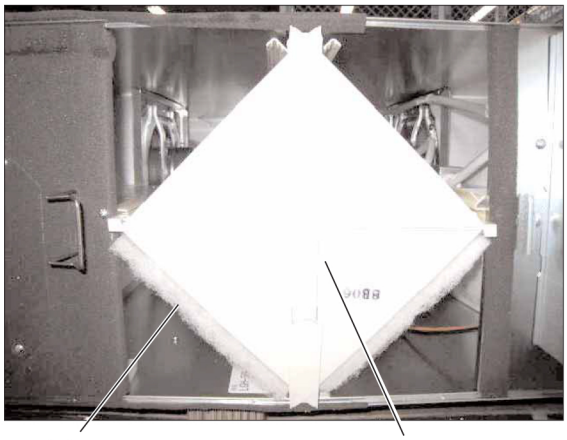

③ Remove the core guide.
Unscrew the fixing screws (two special screws 4 x 22.5, indicated by ○).



④ Slide the connector covers (with the connector) toward the Lossnay core side, and then take them off from the unit.

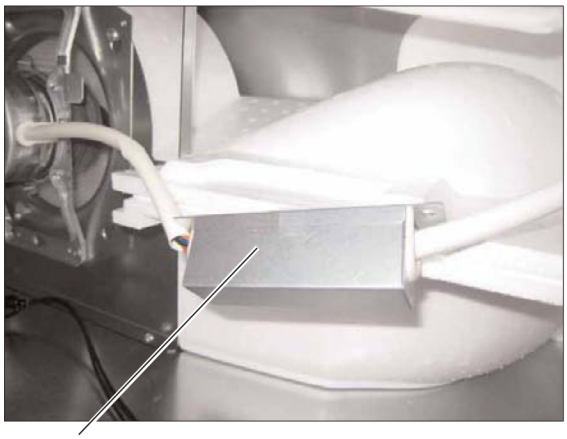

⑤ Remove the connectors.

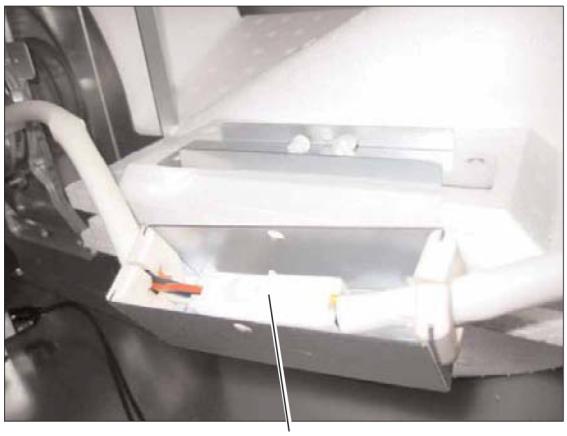

⑥ Take off the separator.



⑦ Unscrew the screws (four PTT screws 5 x 10, indicated by ○) for the motor fix plate (SA side).
(Remove the EA side motor in the same way .)

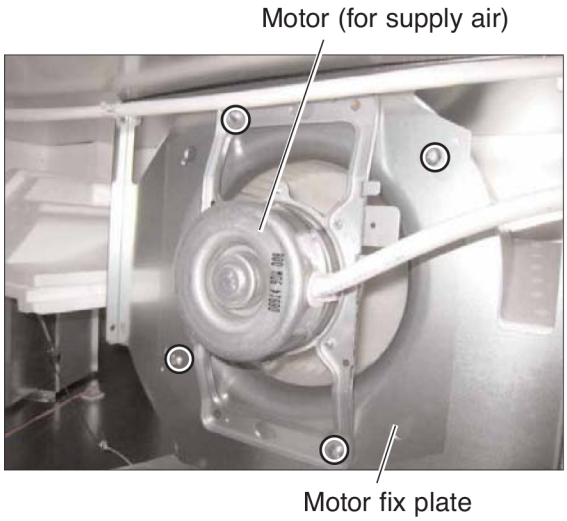

✻ When assembling

Instructions:
- When reassembling the unit, assemble it in the reverse order of disassembly.
- Always make sure that the unit works properly when reassembled.

9. Parts catalog

Please note the following when using the parts catalog.

1. When ordering parts, always indicate the part number, part name, and the number of parts required.
2. Parts are not always available, and it may take time for you to receive them.
3. There may be specification improvements.
4. Specifications are correct as of January 2009.
5. Parts marked ⚠ are critical for safety. To maintain safety and performance, always replace these parts with the parts prescribed.
6. The numbers that are circled in the exploded view are the same as the reference number for the part being indicated.

Description of screw abbreviations

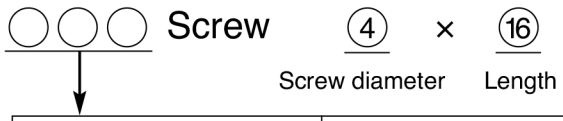

Abbreviation	Description
PC screw	Cross recess flat head machine screw
PRC screw	Cross recess oval head machine screw
PP screw	Cross recess pan head machine screw
SW · PP screw	Cross recess pan head screw with spring washer
PPT screw	Cross recess tapping screw
PCT screw	Cross recess flat head tapping screw
PTT screw	Cross recess truss head tapping screw
PT screw	Cross recess truss head machine screw
SET screw	Slotted head stop screw
SQ · SET screw	Square head stop screw
P · SET screw	Pan head stop screw
PMT screw	Primer truss head screw
HS · SET screw	Hexagon head stop screw
P · R · W screw	Cross recess round wood screw
P · C · W screw	Cross recess flat head wood screw
P · R · C · W screw	Cross recess round and flat wood screw
R · W screw	Slotted round wood screw
PW · PP screw	Cross recess pan head screw with small washer
SW-PW · PP screw	Cross recess pan head machine screw with spring washer and flat washer

Model LGH-15RX5-E

No.	Parts No.	Name of part	Q'ty pcs/unit	Critical for safety	Remarks	Price
1.	R50 541 045	Special screw	2			
2.	X50 039 710	Filter stopper	8			
3.	R50 541 383	Core guide(left)	1			
4.	H00 000 244	PT screw 6×12	8			
5.	R50 541 380	Hanger	4			
6.	R50 541 717	Cover	2			
7.	Y50 115 619	Flange	4			
8.	H00 000 487	PTT screw 4×8	46			
9.	R50 541 487	Maintenance cover	1			
10.	X50 039 717	Filter	4	⚠		
11.	R50 541 718	Lossnay core	2	⚠	With filter stopper	
12.	R50 541 384	Core guide(right)	1			
13.	R50 466 344	Hinge	1			
14.	Y50 029 712	Fix piece	1			

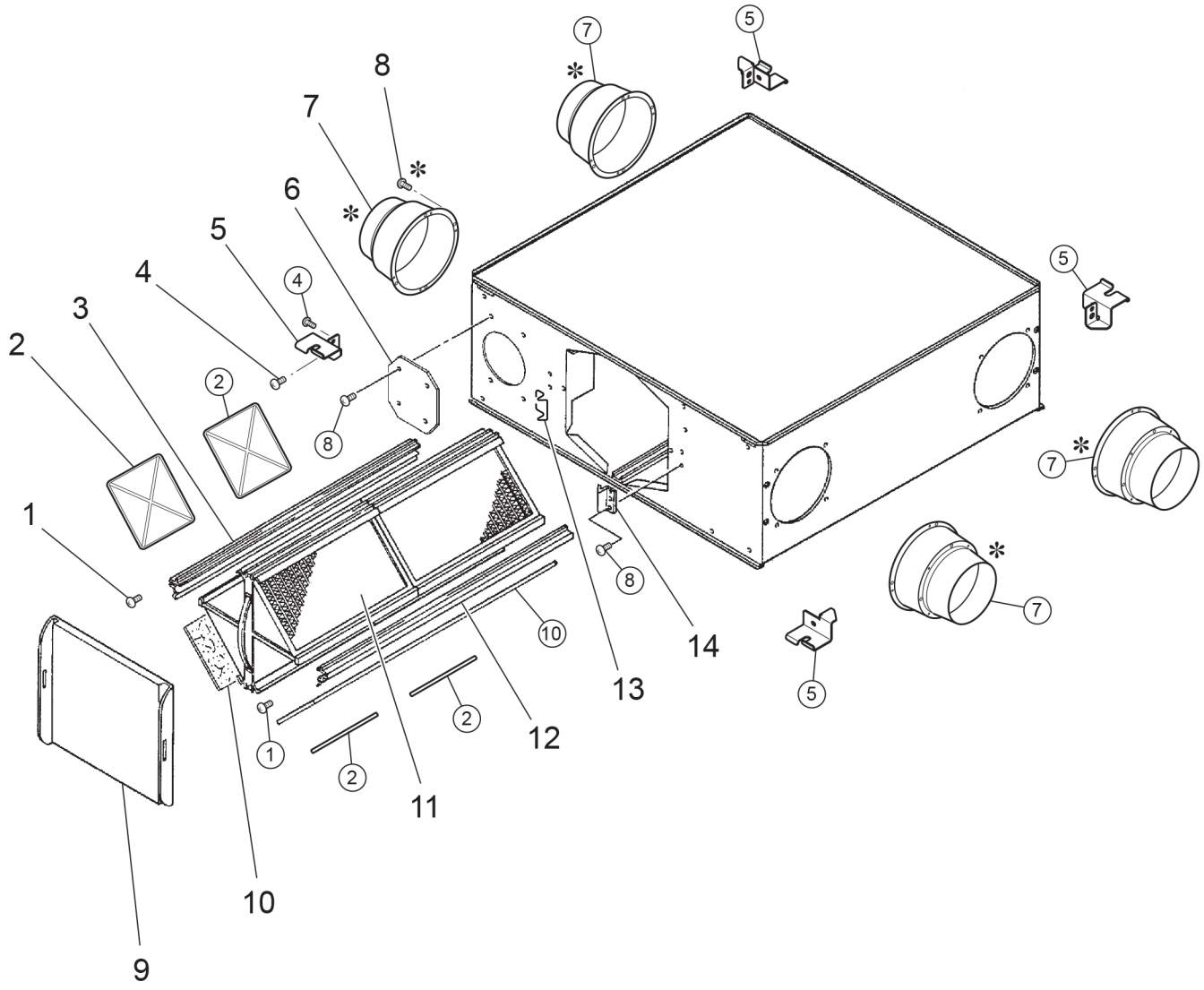

✻ shows accessory parts.

Model LGH-15RX5-E

No.	Parts No.	Name of part	Q'ty pcs/unit	Critical for safety	Remarks	Price
21.	R50 331 067	Special nut(8)	2		Left-handed	
22.	M34 398 077	Tab washer	2			
23.	R50 541 480	Centrifugal fan	2	⚠	ϕ180	
24.	R50 028 465	Special washer	2		ϕ8.1	
25.	Y50 115 454	Motor	1	⚠		
26.	R50 214 708	Motor plate	4			
27.	H00 000 332	PTT screw 4×10	13			
28.	R50 541 712	Motor fix plate	2			
29.	D43 008 223	Cord clamper	2			
30.	Y50 115 453	Motor	1	⚠		
31.	H00 312 007	PTT screw 4×6	16			
32.	M45 649 226	Cord bush	2			
33.	Y50 115 709	Connector cover	1			
34.	D41 006 363	Cord band	1			
35.	Y50 115 710	Connector plate	1			
36.	R50 541 488	Separator	2			

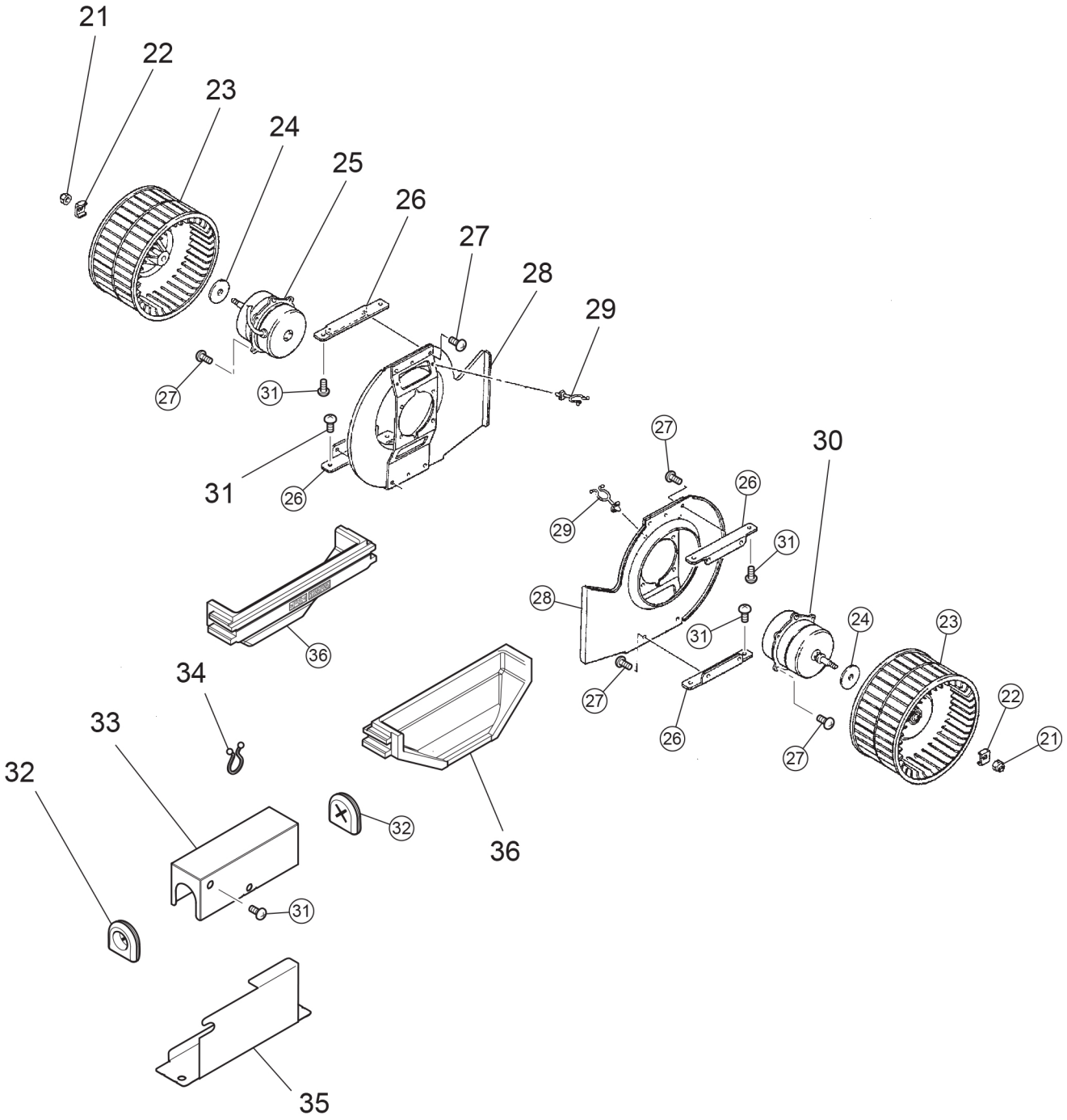
21
22
23
24
25
26
27
28
29
30
31
32
33
34
35
36

Model LGH-15RX5-E

No.	Parts No.	Name of part	Q'ty pcs/unit	Critical for safety	Remarks	Price
41.	R50 533 693	Fix plate	1			
42.	Y50 115 708	Damper motor cover	1			
43.	Y50 115 225	Bush	1			
44.	R50 541 715	Damper support	1			
45.	M31 234 089	Special bush	2			
46.	R50 095 156	Pull spring	1			
47.	R50 213 713	Damper	1			
48.	R50 351 225	Cord bush	1			
49.	Y50 061 260	Damper motor	1	⚠	AC220･240V	
50.	R50 054 225	Bush	1			
51.	Y50 115 150	Rod	1			
52.	Y50 115 705	Control cover	1			
53.	Y50 115 368	Wiring diagram	1			
54.	Y50 115 287	Capacitor	2	⚠	1.5μF･440VAC	
55.	H00 003 005	PPT screw 3×8	1			
56.	Y50 115 171	Circuit board	1	⚠	LG-X3-E	
57.	H00 013 076	Lock washer(4)	2			
58.	Y50 115 216	Transformer	1	⚠	AC230V	
59.	H00 011 008	PT screw 4×8(BS)	1			
60.	M45 017 228	Cord band	1			
61.	K83 170 228	Cord band	2			
62.	R50 546 705	Circuit fix plate	1			
63.	R50 476 225	Bush	3			
64.	H00 000 003	PP screw 4×8	2			
65.	H00 154 005	PPT screw 4×12	1			
66.	M13 100 242	Terminal block	1	⚠	3P	
67.	Y50 115 712	Terminal block fix plate	1			
68.	Y55 001 223	Cord clip	1			
69.	Y50 115 711	Side plate	1			
70.	K82 163 225	Bush	2			
71.	R50 546 167	Thermistor	1	⚠		
72.	Y50 047 231	Connection cable	1		SLIM-LOSSNAY	

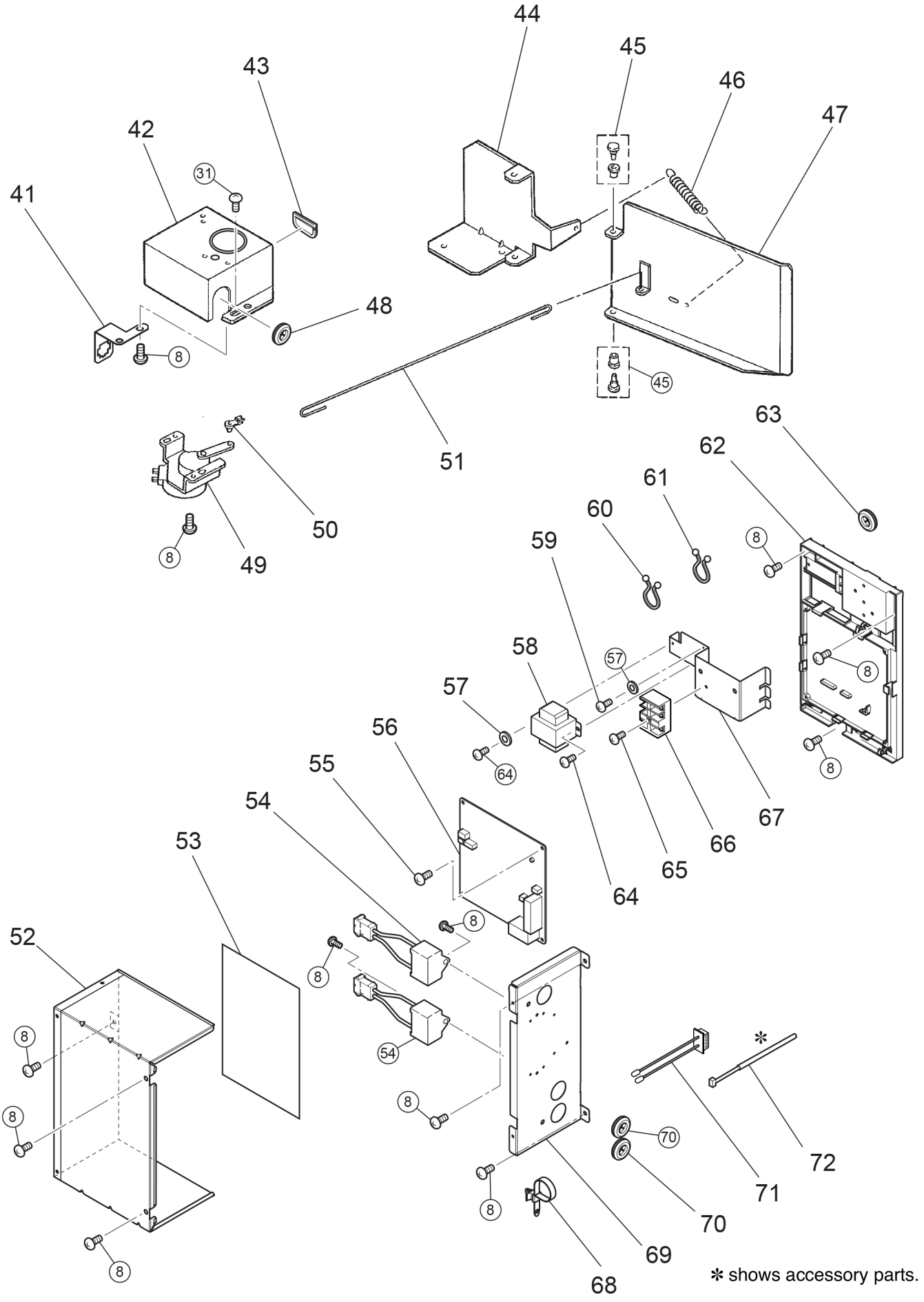

* shows accessory parts.

Model LGH-25RX5-E

No.	Parts No.	Name of part	Q'ty pcs/unit	Critical for safety	Remarks	Price
1.	R50 541 045	Special screw	2			
2.	X50 039 710	Filter stopper	8			
3.	R50 541 383	Core guide(left)	1			
4.	H00 000 244	PT screw 6×12	8			
5.	R50 541 380	Hanger	4			
6.	R50 541 717	Cover	2			
7.	Y50 075 609	Flange	4			
8.	H00 000 487	PTT screw 4×8	46			
9.	R50 541 487	Maintenance cover	1			
10.	X50 039 717	Filter	4	⚠		
11.	R50 541 718	Lossnay core	2	⚠	With filter stopper	
12.	R50 541 384	Core guide(right)	1			
13.	R50 466 344	Hinge	1			
14.	Y50 029 712	Fix piece	1			

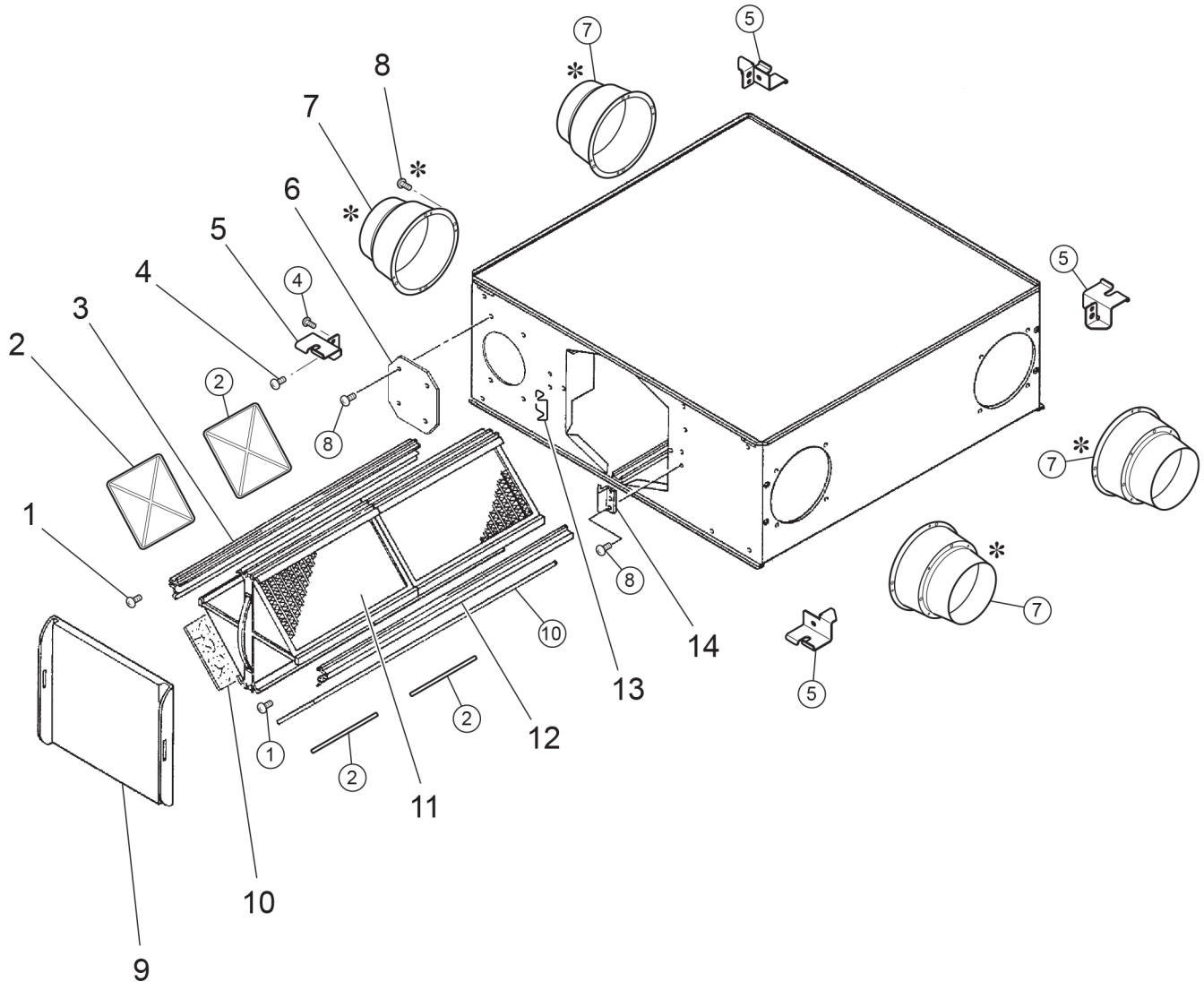

✻ shows accessory parts.

Model LGH-25RX5-E

No.	Parts No.	Name of part	Q'ty pcs/unit	Critical for safety	Remarks	Price
21.	R50 331 067	Special nut(8)	2		Left-handed	
22.	M34 398 077	Tab washer	2			
23.	R50 541 480	Centrifugal fan	2	⚠	ϕ180	
24.	R50 028 465	Special washer	2		ϕ8.1	
25.	Y50 115 456	Motor	1	⚠		
26.	R50 214 708	Motor plate	4			
27.	H00 000 332	PTT screw 4×10	13			
28.	R50 541 712	Motor fix plate	2			
29.	D43 008 223	Cord clamper	2			
30.	Y50 115 455	Motor	1	⚠		
31.	H00 312 007	PTT screw 4×6	14			
32.	M45 649 226	Cord bush	2			
33.	Y50 115 709	Connector cover	1			
34.	D41 006 363	Cord band	1			
35.	Y50 115 710	Connector plate	1			
36.	R50 541 488	Separator	2			

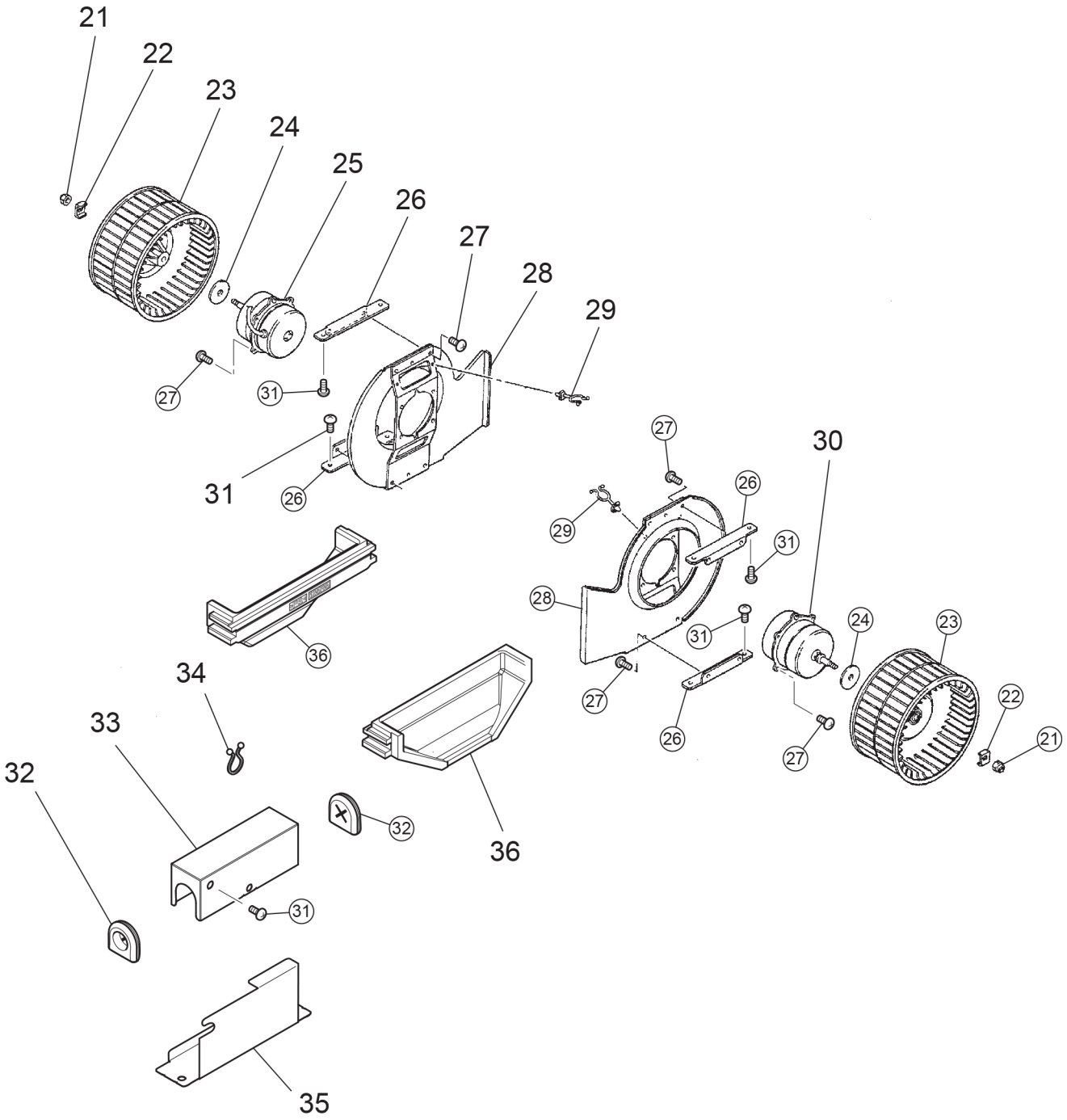
21
22
23
24
25
26
27
28
29
30
31
32
33
34
35
36

Model LGH-25RX5-E

No.	Parts No.	Name of part	Q'ty pcs/unit	Critical for safety	Remarks	Price
41.	R50 533 693	Fix plate	1			
42.	Y50 115 708	Damper motor cover	1			
43.	Y50 115 225	Bush	1			
44.	R50 541 715	Damper support	1			
45.	M31 234 089	Special bush	2			
46.	R50 095 156	Pull spring	1			
47.	R50 213 713	Damper	1			
48.	R50 351 225	Cord bush	1			
49.	Y50 061 260	Damper motor	1	⚠	AC220･240V	
50.	R50 054 225	Bush	1			
51.	Y50 115 150	Rod	1			
52.	Y50 115 705	Control cover	1			
53.	Y50 115 368	Wiring diagram	1			
54.	Y50 115 288	Capacitor	2	⚠	2.0μF･440VAC	
55.	H00 003 005	PPT screw 3×8	1			
56.	Y50 115 171	Circuit board	1	⚠	LG-X3-E	
57.	H00 013 076	Lock washer(4)	2			
58.	Y50 115 216	Transformer	1	⚠	AC230V	
59.	H00 011 008	PT screw 4×8(BS)	1			
60.	M45 017 228	Cord band	1			
61.	K83 170 228	Cord band	2			
62.	R50 546 705	Circuit fix plate	1			
63.	R50 476 225	Bush	3			
64.	H00 000 003	PP screw 4×8	2			
65.	H00 154 005	PPT screw 4×12	1			
66.	M13 100 242	Terminal block	1	⚠	3P	
67.	Y50 115 712	Terminal block fix plate	1			
68.	Y55 001 223	Cord clip	1			
69.	Y50 115 711	Side plate	1			
70.	K82 163 225	Bush	2			
71.	R50 546 167	Thermistor	1	⚠		
72.	Y50 047 231	Connection cable	1		SLIM-LOSSNAY	

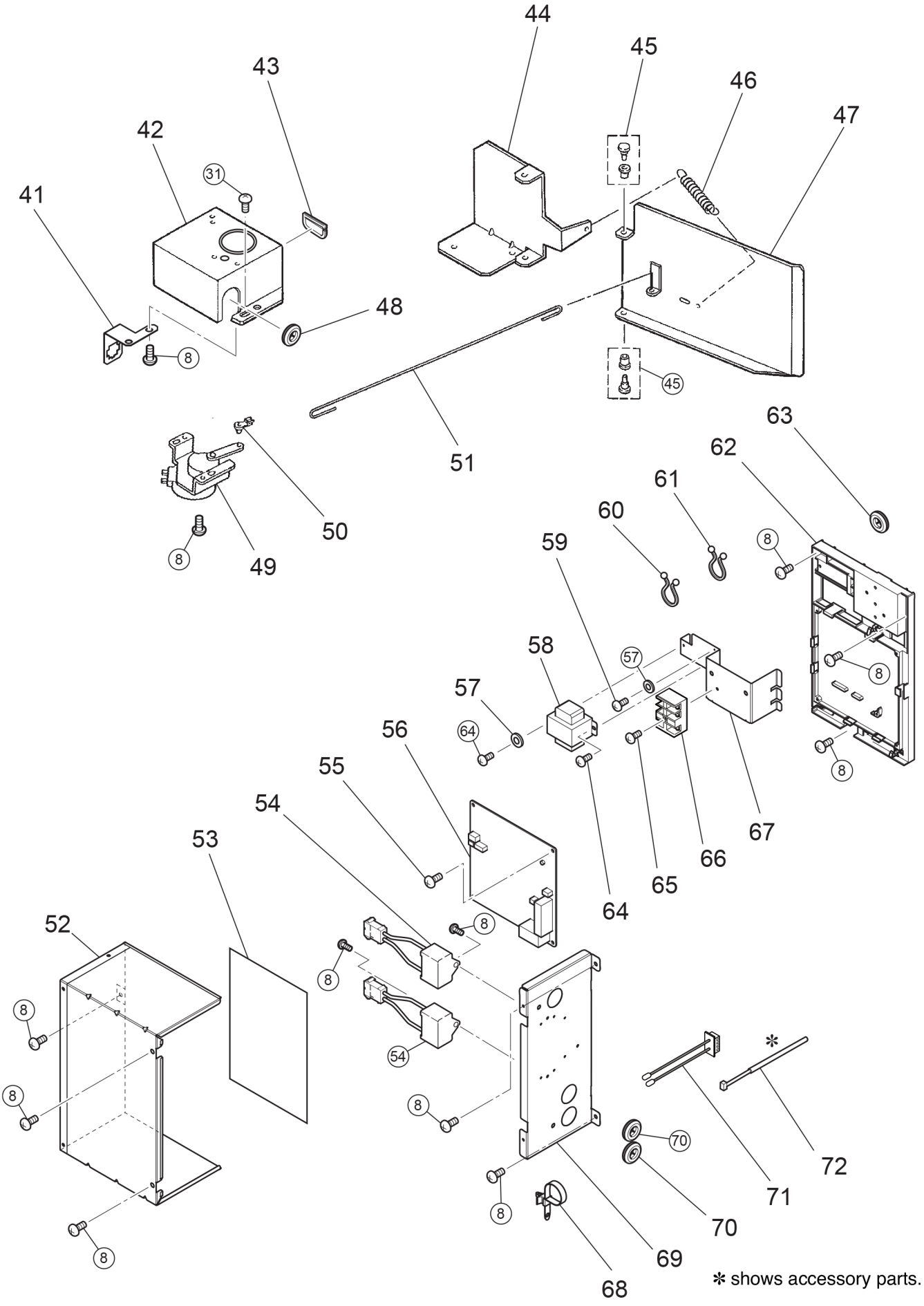
44
45
43
46
47
42
31
41
48
8
45
51
63
62
61
50
60
8
49
59
8
58
57
57
8
64
56
8
55
54
67
53
66
65
64
52
8
8
8
54
8
8
70
72
71
8
70
69
68
8
✻ shows accessory parts.

Model LGH-35RX5-E

No.	Parts No.	Name of part	Q'ty pcs/unit	Critical for safety	Remarks	Price
1.	R50 541 045	Special screw	2			
2.	R50 521 710	Filter stopper	8			
3.	R50 542 381	Core guide(left)	1			
4.	H00 000 244	PT screw 6×12	8			
5.	R50 541 380	Hanger	4			
6.	R50 541 717	Cover	2			
7.	Y50 075 609	Flange	4			
8.	H00 000 487	PTT screw 4×8	48			
9.	R50 542 486	Maintenance cover	1	⚠		
10.	Y50 116 717	Filter	4	⚠		
11.	R50 542 710	Lossnay core	2	⚠	With filter stopper	
12.	R50 542 382	Core guide(right)	1			
13.	R50 466 344	Hinge	1			
14.	Y50 029 712	Fix piece	1			

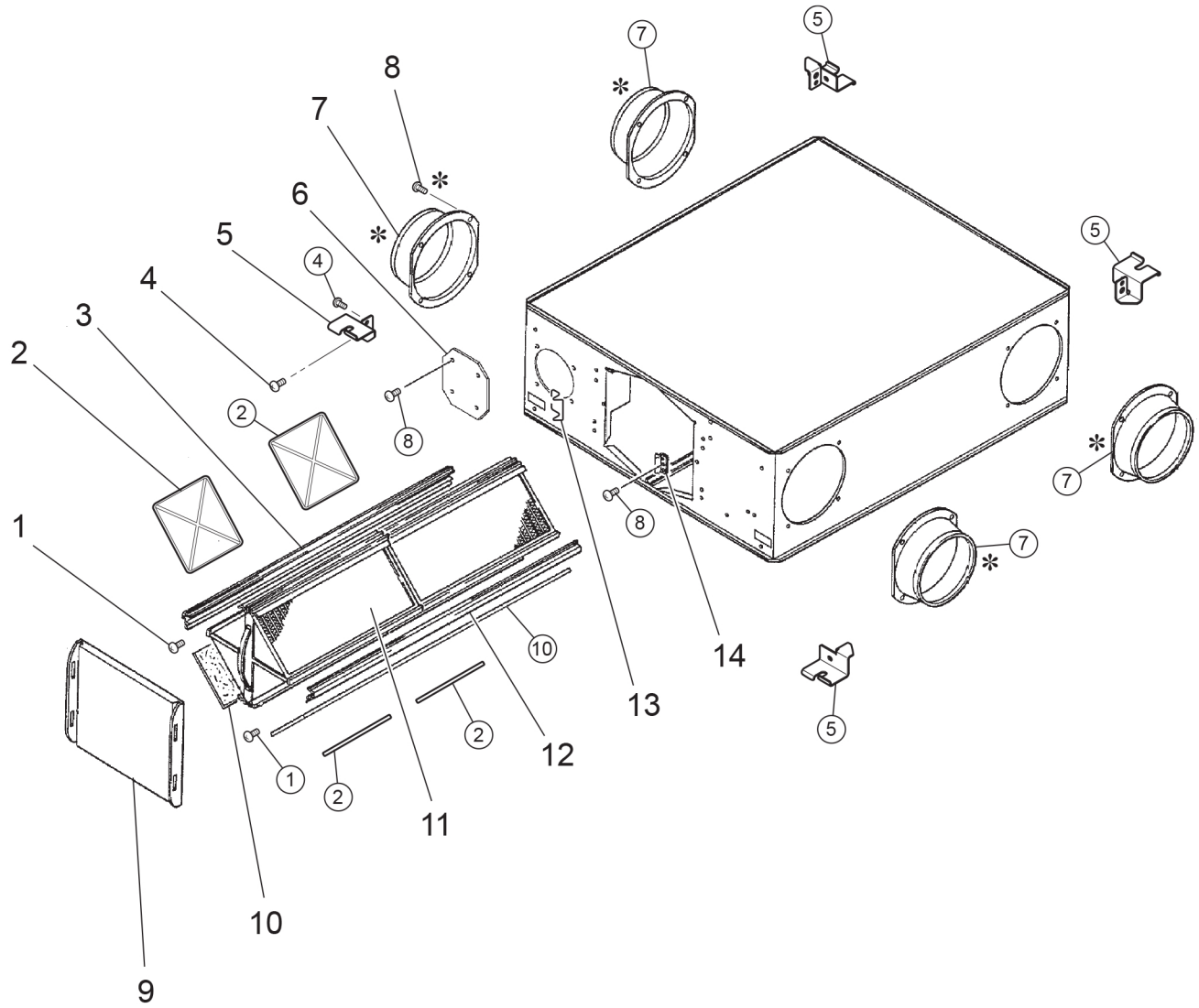

✻ shows accessory parts.

Model LGH-35RX5-E

No.	Parts No.	Name of part	Q'ty pcs/unit	Critical for safety	Remarks	Price
21.	R50 331 067	Special nut(8)	2		Left-handed	
22.	M34 398 077	Tab washer	2			
23.	R50 542 480	Centrifugal fan	2	⚠	ϕ220	
24.	R50 542 707	Fan base	2			
25.	M34 706 465	Special washer	2		ϕ10	
26.	Y50 116 453	Motor	2	⚠		
27.	Y50 116 712	Motor fix plate	2			
28.	H00 189 007	PTT screw 5×10	8			
29.	D43 008 223	Cord clamper	2			
30.	M45 649 226	Cord bush	4			
31.	Y50 115 709	Connector cover	2			
32.	H00 312 007	PTT screw 4×6	15			
33.	Y50 115 710	Connector plate	2			
34.	M45 017 228	Cord band	2			
35.	R50 542 487	Separator	2			
36.	H00 194 008	PT screw 5×20	8			
37.	Y50 116 080	Special washer	8			
38.	H00 012 050	Nut(5)	8			

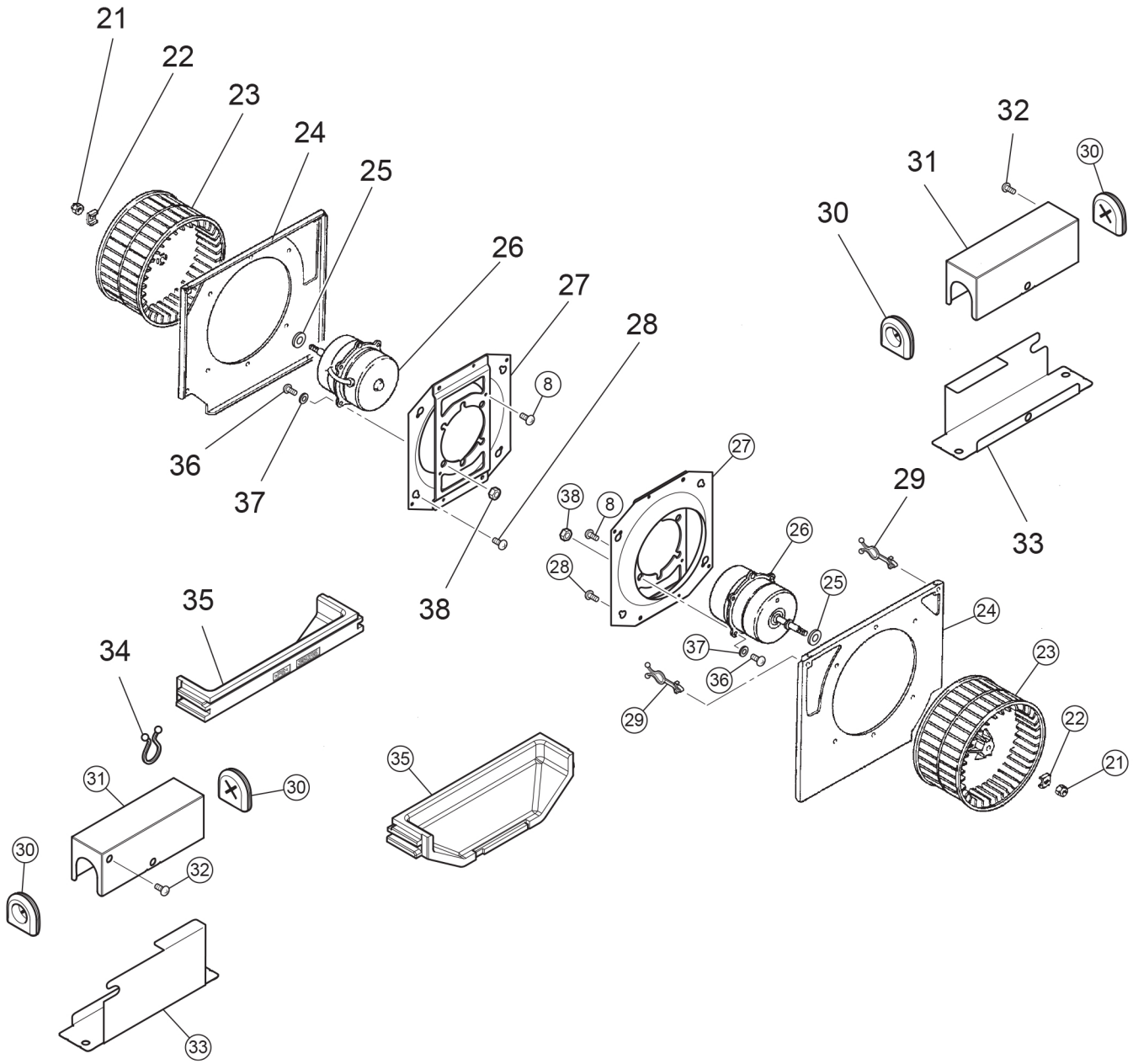
21
22
23
24
25
26
27
28
8
36
37
38
35
34
31
30
32
33
29

Model LGH-35RX5-E

No.	Parts No.	Name of part	Q'ty pcs/unit	Critical for safety	Remarks	Price
41.	R50 533 693	Fix plate	1			
42.	Y50 115 708	Damper motor cover	1			
43.	Y50 115 225	Bush	1			
44.	R50 351 225	Cord bush	1			
45.	Y50 061 260	Damper motor	1	⚠	AC220･240V	
46.	R50 054 225	Bush	1			
47.	Y50 116 156	Rod	1			
48.	Y50 115 705	Control cover	1			
49.	Y50 115 368	Wiring diagram	1			
50.	H00 003 005	PPT screw 3×8	1			
51.	Y50 115 171	Circuit board	1	⚠	LG-X3-E	
52.	H00 013 076	Lock washer(4)	2			
53.	Y50 115 216	Transformer	1	⚠	AC230V	
54.	H00 011 008	PT screw 4×8(BS)	1			
55.	Y50 115 712	Terminal block fix plate	1			
56.	K83 170 228	Cord band	2			
57.	R50 546 705	Circuit fix plate	1			
58.	R50 476 225	Bush	3			
59.	H00 000 003	PP screw 4×8	2			
60.	H00 154 005	PPT screw 4×12	1			
61.	M13 100 242	Terminal block	1	⚠	3P	
62.	Y50 116 287	Capacitor	2	⚠	3.0μF･440VAC	
63.	Y50 047 231	Connection cable	1		SLIM-LOSSNAY	
64.	R50 547 167	Thermistor	1	⚠		
65.	Y50 115 711	Side plate	1			
66.	K82 163 225	Bush	2			
67.	Y55 001 223	Cord clip	1			

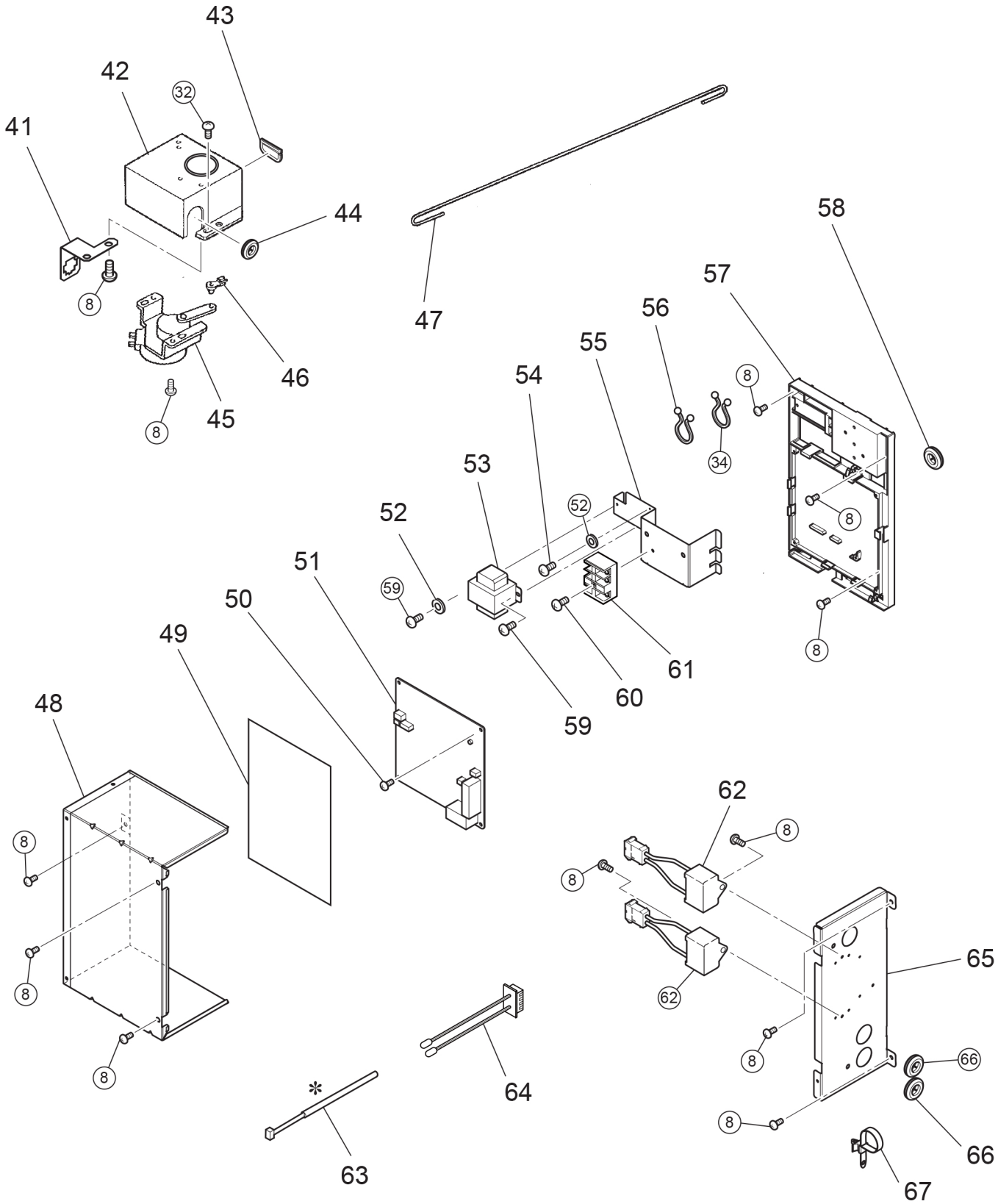

✻ shows accessory parts.

Model LGH-50RX5-E

No.	Parts No.	Name of part	Q'ty pcs/unit	Critical for safety	Remarks	Price
1.	R50 541 045	Special screw	2			
2.	R50 521 710	Filter stopper	8			
3.	R50 542 383	Core guide(left)	1			
4.	H00 000 244	PT screw 6×12	8			
5.	R50 541 380	Hanger	4			
6.	R50 542 706	Cover	2			
7.	R50 429 609	Flange	4			
8.	H00 000 487	PTT screw 4×8	48			
9.	R50 542 486	Maintenance cover	1	⚠		
10.	R50 521 717	Filter	4	⚠		
11.	R50 542 711	Lossnay core	2	⚠	With filter stopper	
12.	R50 542 384	Core guide(right)	1			
13.	R50 466 344	Hinge	1			
14.	Y50 029 712	Fix piece	1			

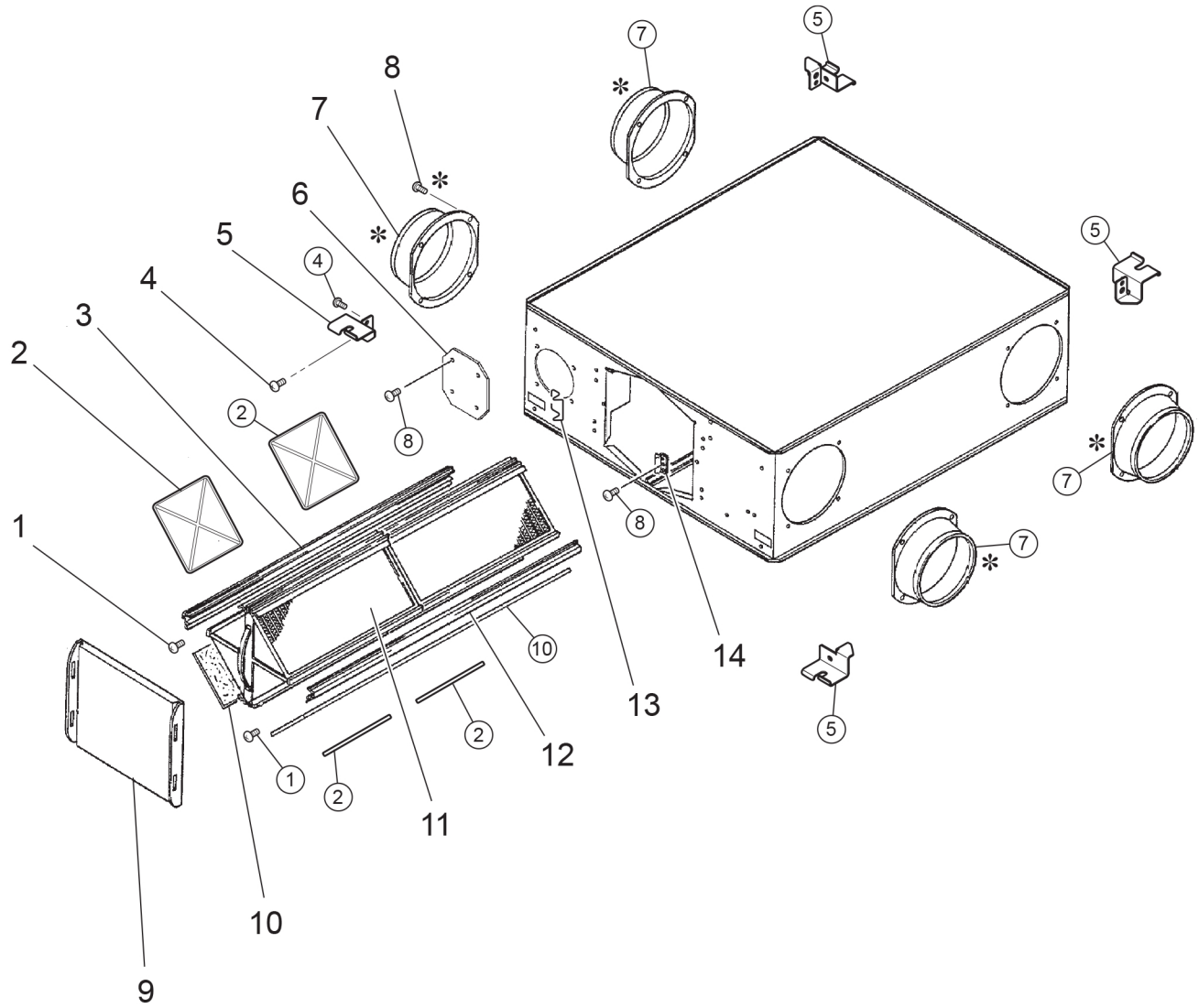

✻ shows accessory parts.

Model LGH-50RX5-E

No.	Parts No.	Name of part	Q'ty pcs/unit	Critical for safety	Remarks	Price
21.	R50 331 067	Special nut(8)	2		Left-handed	
22.	M34 398 077	Tab washer	2			
23.	R50 542 480	Centrifugal fan	2	⚠	φ220	
24.	R50 542 707	Fan base	2			
25.	M34 706 465	Special washer	2		φ10	
26.	Y50 116 454	Motor	2	⚠		
27.	Y50 116 712	Motor fix plate	2			
28.	H00 189 007	PTT screw 5×10	8			
29.	D43 008 223	Cord clamper	2			
30.	M45 649 226	Cord bush	4			
31.	Y50 115 709	Connector cover	2			
32.	H00 312 007	PTT screw 4×6	15			
33.	Y50 115 710	Connector plate	2			
34.	M45 017 228	Cord band	2			
35.	R50 542 487	Separator	2			
36.	H00 194 008	PT screw 5×20	8			
37.	Y50 116 080	Special washer	8			
38.	H00 012 050	Nut(5)	8			

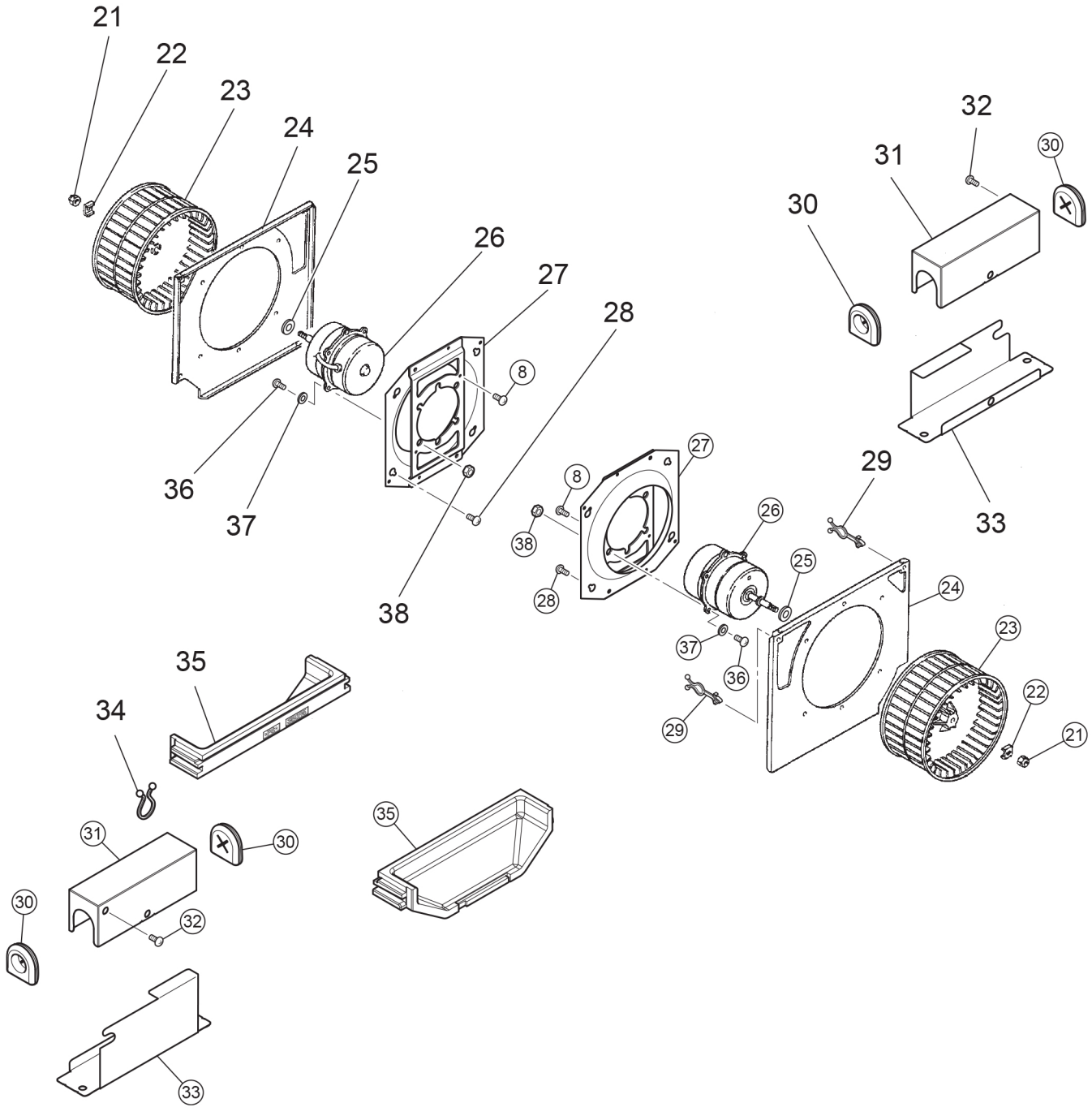
21
22
23
24
25
26
27
28
8
36
37
38
35
34
31
30
32
33
29

Model LGH-50RX5-E

No.	Parts No.	Name of part	Q'ty pcs/unit	Critical for safety	Remarks	Price
41.	R50 533 693	Fix plate	1			
42.	Y50 115 708	Damper motor cover	1			
43.	Y50 115 225	Bush	1			
44.	R50 351 225	Cord bush	1			
45.	Y50 061 260	Damper motor	1	⚠	AC220･240V	
46.	R50 054 225	Bush	1			
47.	Y50 116 156	Rod	1			
48.	Y50 115 705	Control cover	1			
49.	Y50 115 368	Wiring diagram	1			
50.	H00 003 005	PPT screw 3×8	1			
51.	Y50 115 171	Circuit board	1	⚠	LG-X3-E	
52.	H00 013 076	Lock washer(4)	2			
53.	Y50 115 216	Transformer	1	⚠	AC230V	
54.	H00 011 008	PT screw 4×8(BS)	1			
55.	Y50 115 712	Terminal block fix plate	1			
56.	K83 170 228	Cord band	2			
57.	R50 546 705	Circuit fix plate	1			
58.	R50 476 225	Bush	1			
59.	H00 000 003	PP screw 4×8	2			
60.	H00 154 005	PPT screw 4×12	1			
61.	M13 100 242	Terminal block	1	⚠	3P	
62.	Y50 116 288	Capacitor	2	⚠	3.5μF･440VAC	
63.	Y50 047 231	Connection cable	1		SLIM-LOSSNAY	
64.	R50 547 167	Thermistor	1	⚠		
65.	Y50 115 711	Side plate	1			
66.	K82 163 225	Bush	2			
67.	Y55 001 223	Cord clip	1			

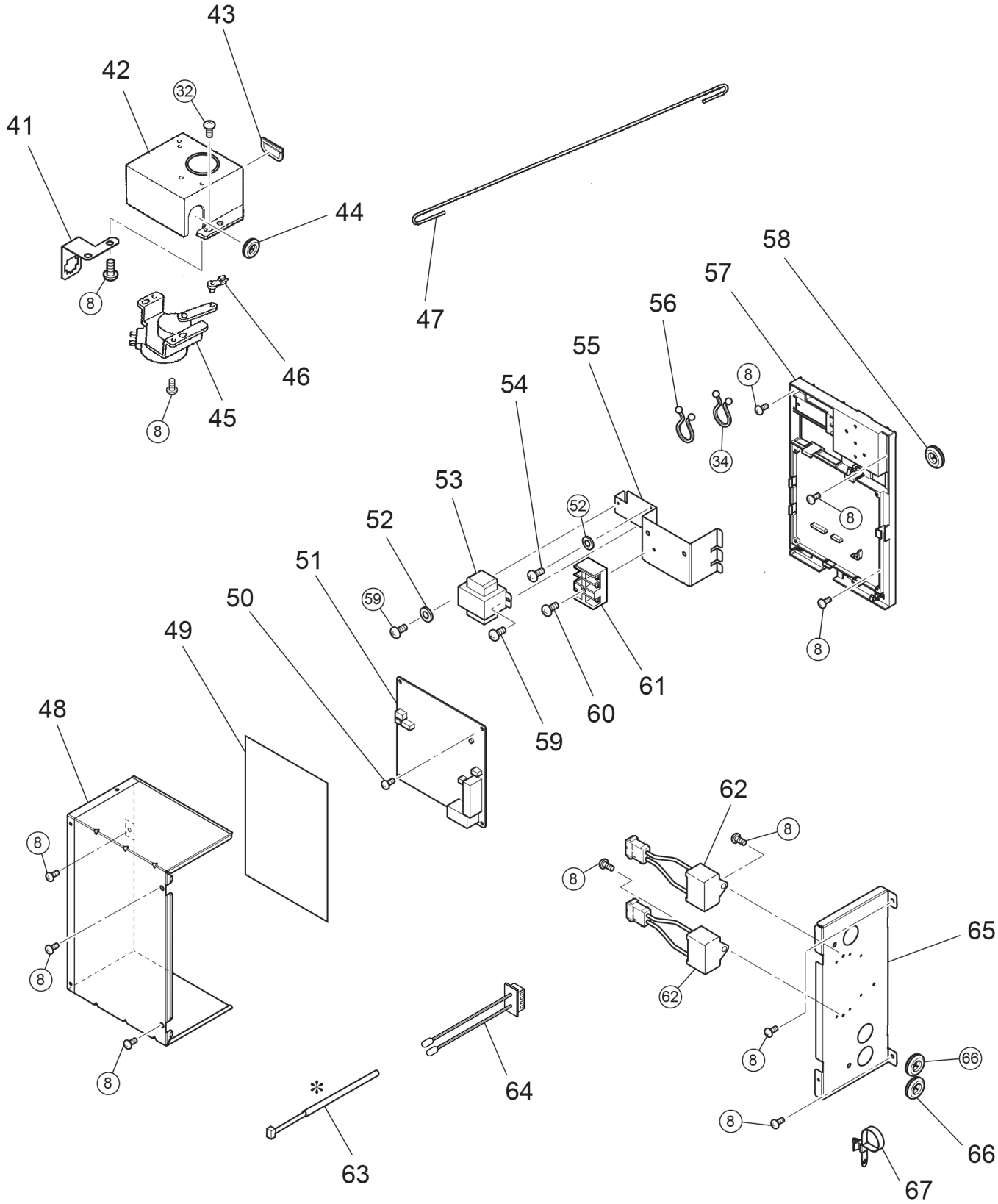

✻ shows accessory parts.

Model LGH-65RX5-E

No.	Parts No.	Name of part	Q'ty pcs/unit	Critical for safety	Remarks	Price
1.	R50 541 045	Special screw	2			
2.	R50 524 710	Filter stopper	8			
3.	R50 543 381	Core guide(left)	1			
4.	H00 000 244	PT screw 6×12	8			
5.	R50 543 380	Hanger	4			
6.	R50 542 706	Cover	2			
7.	R50 429 609	Flange	4			
8.	H00 000 487	PTT screw 4×8	55			
9.	R50 543 486	Maintenance cover	1			
10.	R50 524 717	Filter	4	⚠		
11.	R50 543 710	Lossnay core	2	⚠	With filter stopper	
12.	R50 543 382	Core guide(right)	1			
13.	R50 466 344	Hinge	2			
14.	Y50 029 712	Fix piece	1			

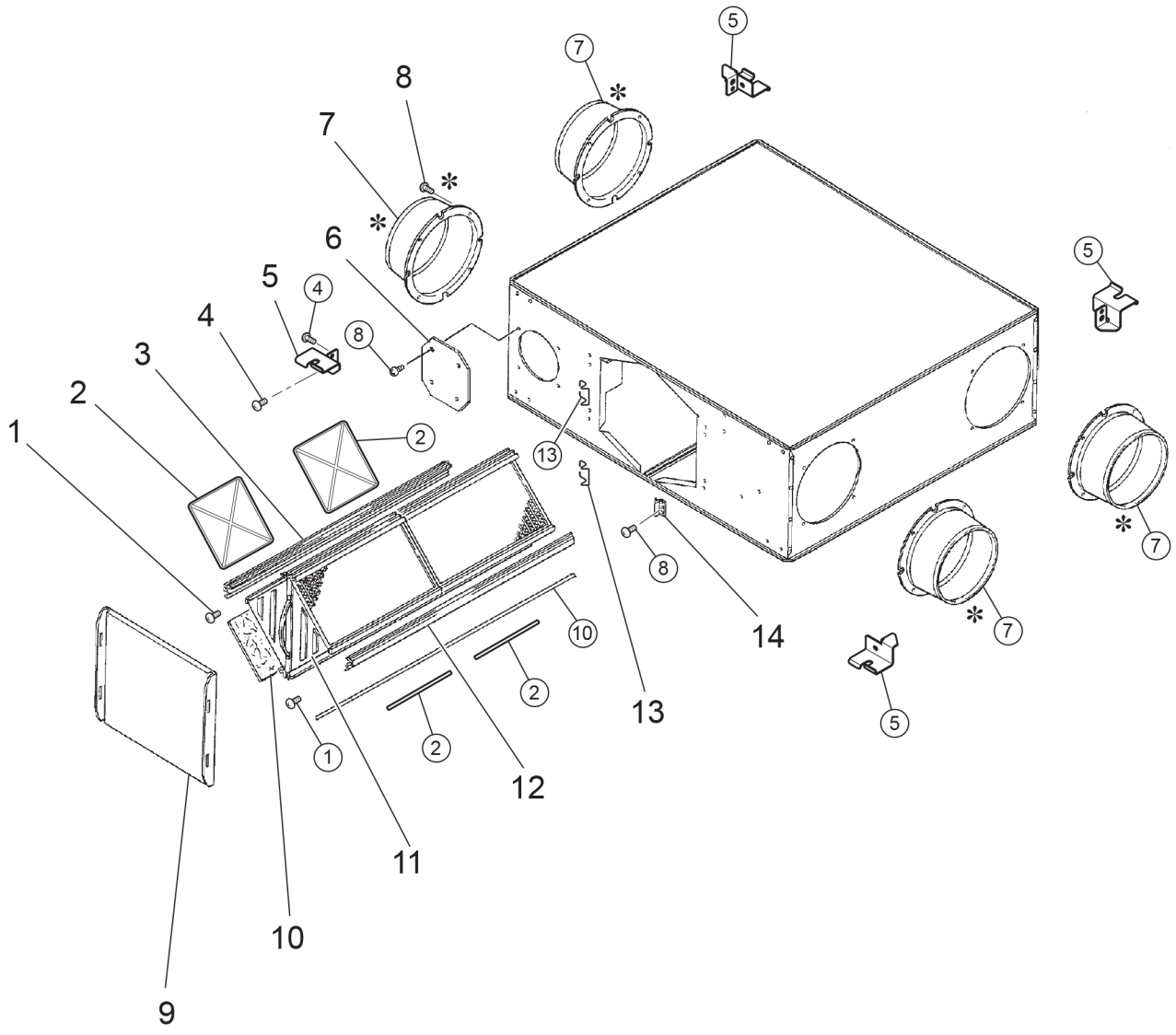

✻ shows accessory parts.

Model LGH-65RX5-E

No.	Parts No.	Name of part	Q'ty pcs/unit	Critical for safety	Remarks	Price
21.	R50 218 067	Special nut(12)	2		Left-handed	
22.	K83 466 113	Washer(12)	2			
23.	R50 543 480	Centrifugal fan	2	⚠	ϕ245	
24.	R50 543 707	Fan base	2			
25.	R50 543 708	Inlet ring	2			
26.	H00 157 008	PT screw 6×20	8			
27.	M34 043 080	Special washer(6)	8			
28.	Y50 033 104	Key	2		5×5×11.5	
29.	Y50 117 453	Motor	2	⚠		
30.	R50 543 712	Motor fix plate	2			
31.	H00 189 007	PTT screw 5×10	16			
32.	H00 061 050	Nut(6)	8			
33.	M45 649 226	Cord bush	4			
34.	Y50 115 709	Connector cover	2			
35.	M45 017 228	Cord band	2			
36.	Y50 115 710	Connector plate	2			
37.	H00 312 007	PTT screw 4×6	2			
38.	R50 543 488	Separator	2			

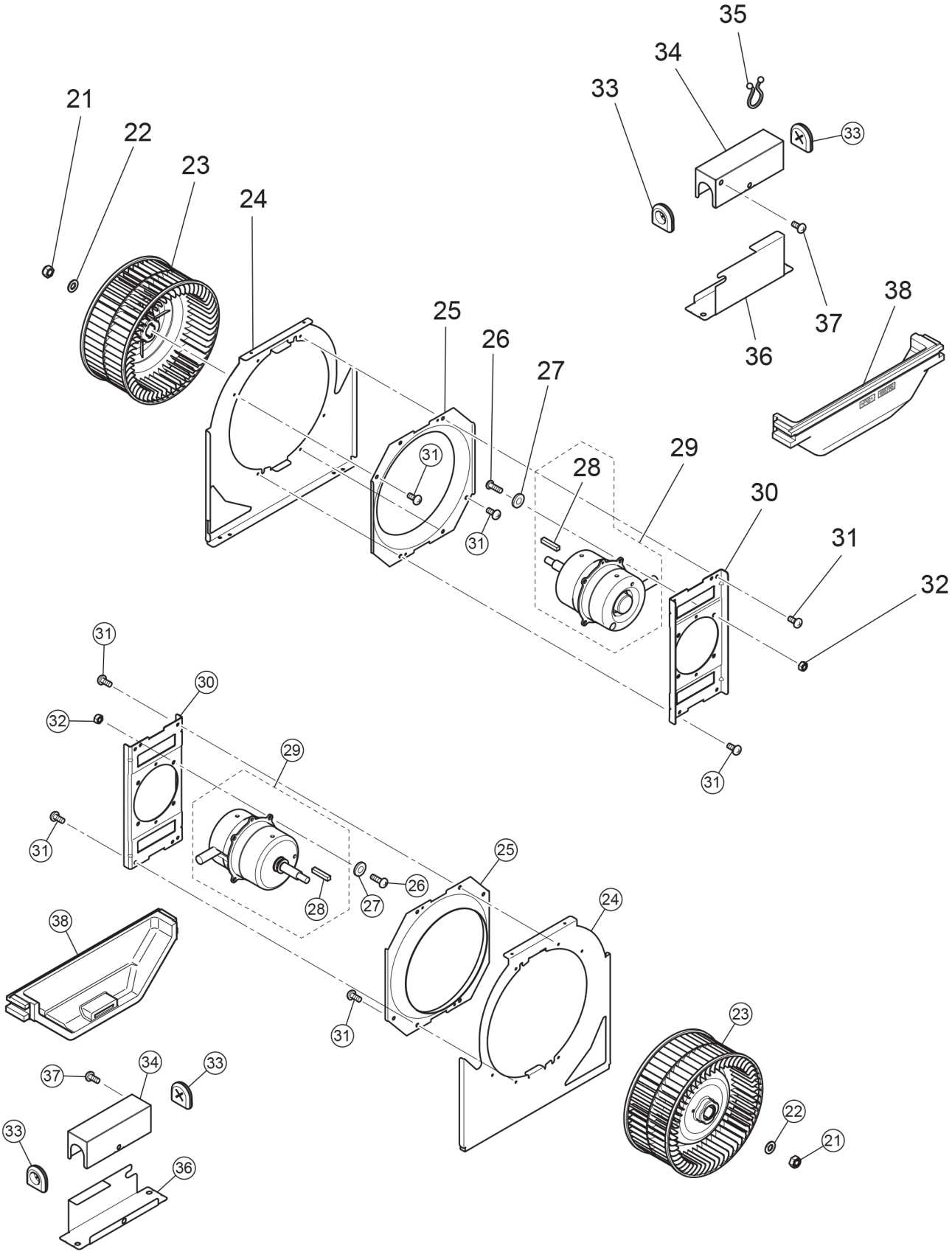
21
22
23
24
25
26
27
28
29
30
31
32
33
34
35
36
37
38

Model LGH-65RX5-E

No.	Parts No.	Name of part	Q'ty pcs/unit	Critical for safety	Remarks	Price
51.	R50 533 693	Fix plate	1			
52.	Y50 115 708	Damper motor cover	1			
53.	Y50 115 225	Bush	1			
54.	R50 351 225	Cord bush	1			
55.	Y50 061 260	Damper motor	1	⚠	AC220･240V	
56.	R50 054 225	Bush	1			
57.	Y50 117 150	Rod	1			
58.	Y50 115 705	Control cover	1			
59.	Y50 115 368	Wiring diagram	1			
60.	H00 003 005	PPT screw 3×8	1			
61.	Y50 115 171	Circuit board	1	⚠	LG-X3-E	
62.	H00 013 076	Lock washer(4)	2			
63.	Y50 115 216	Transformer	1	⚠	AC230V	
64.	H00 011 008	PT screw 4×8(BS)	1			
65.	Y50 115 712	Terminal block fix plate	1			
66.	K83 170 228	Cord band	2			
67.	R50 546 705	Circuit fix plate	1			
68.	R50 476 225	Bush	1			
69.	H00 000 003	PP screw 4×8	2			
70.	H00 154 005	PPT screw 4×12	1			
71.	M13 100 242	Terminal block	1	⚠	3P	
72.	Y50 117 287	Capacitor	2	⚠	5.0μF･440VAC	
73.	Y50 047 231	Connection cable	1		SLIM-LOSSNAY	
74.	R50 547 167	Thermistor	1	⚠		
75.	Y50 115 711	Side plate	1			
76.	K82 163 225	Bush	2			
77.	Y55 001 223	Cord clip	1			

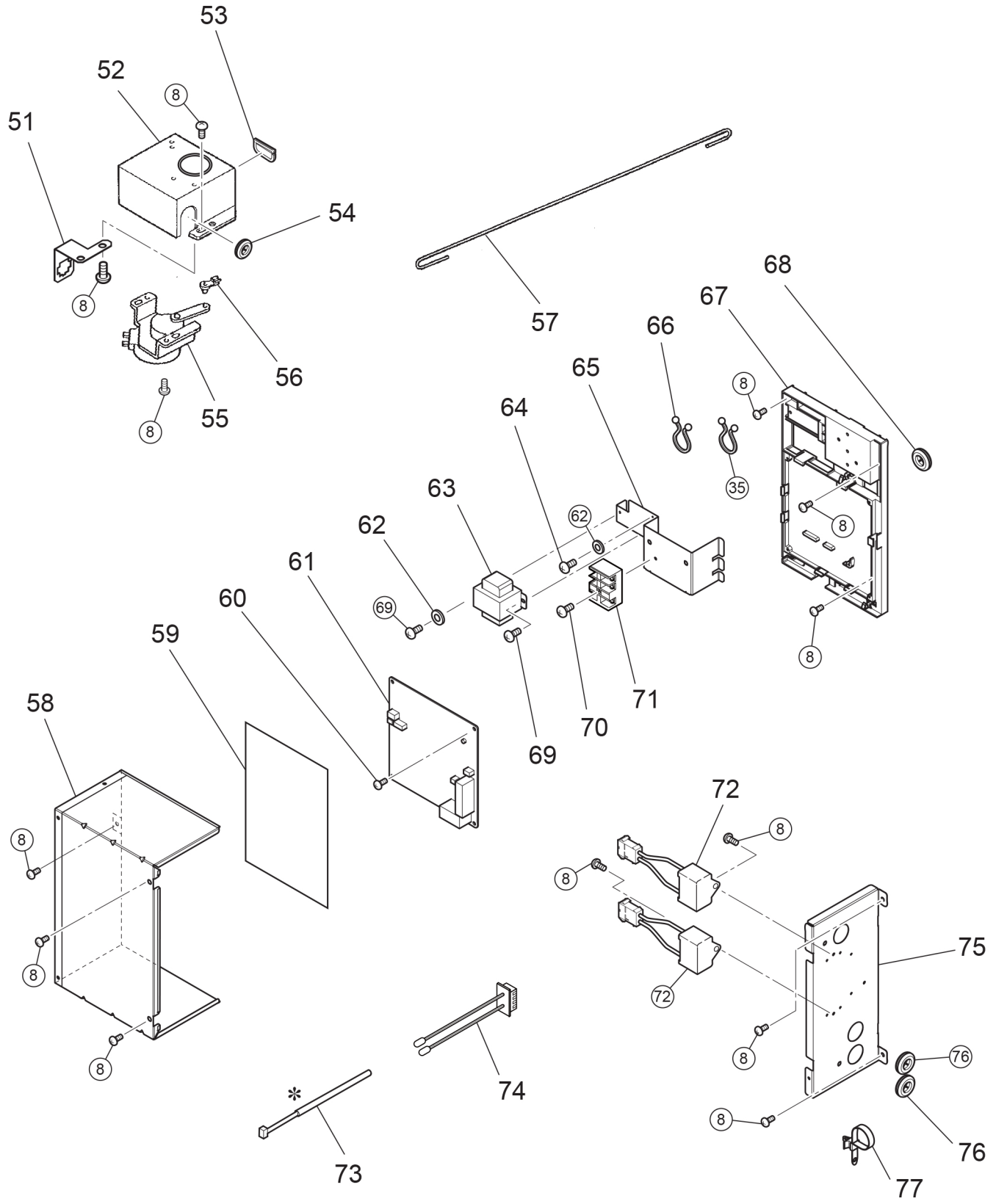

✻ shows accessory parts.

Model LGH-80RX5-E

No.	Parts No.	Name of part	Q'ty pcs/unit	Critical for safety	Remarks	Price
1.	R50 541 045	Special screw	2			
2.	R50 522 710	Filter stopper	8			
3.	R50 543 383	Core guide(left)	1			
4.	H00 000 244	PT screw 6×12	16			
5.	R50 095 380	Hanger	4			
6.	R50 543 704	Cover	2			
7.	Y50 021 609	Flange	4			
8.	H00 000 487	PTT screw 4×8	54			
9.	R50 543 487	Maintenance cover	1			
10.	R50 529 717	Filter	4	⚠		
11.	R50 543 711	Lossnay core	2	⚠	With filter stopper	
12.	R50 543 384	Core guide(right)	1			
13.	R50 466 344	Hinge	1			
14.	Y50 029 712	Fix piece	2			

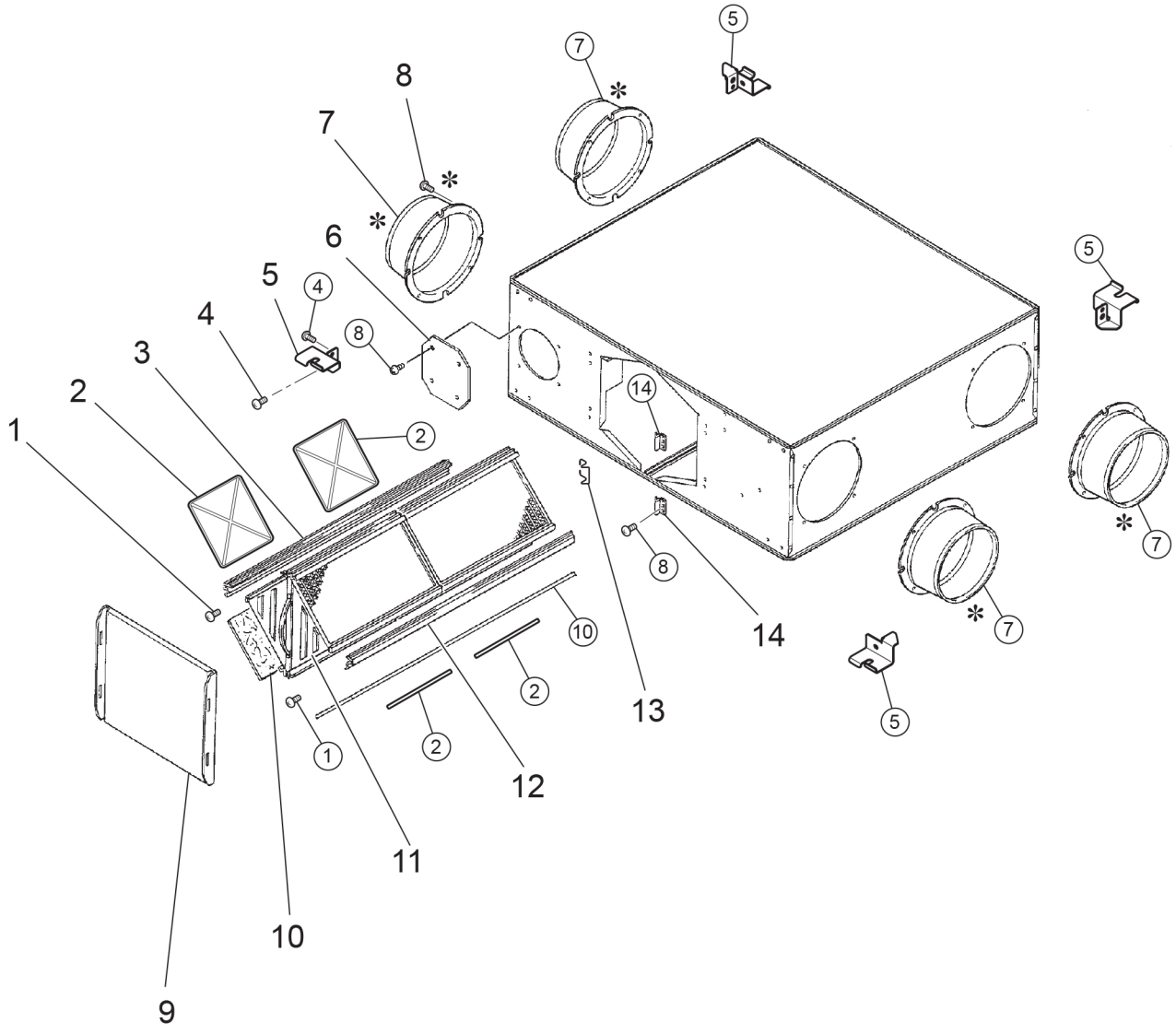

✻ shows accessory parts.

Model LGH-80RX5-E

No.	Parts No.	Name of part	Q'ty pcs/unit	Critical for safety	Remarks	Price
21.	R50 218 067	Special nut(12)	2		Left-handed	
22.	K83 466 113	Washer(12)	2			
23.	R50 543 480	Centrifugal fan	2	⚠	ϕ245	
24.	R50 543 709	Fan base	2			
25.	R50 543 708	Inlet ring	2			
26.	H00 061 050	Nut(6)	8			
27.	Y50 033 104	Key	2		5×5×11.5	
28.	Y50 117 454	Motor	2	⚠		
29.	Y50 117 712	Motor fix plate	2			
30.	H00 189 007	PTT screw 5×10	16			
31.	M34 043 080	Special washer(6)	8			
32.	H00 157 008	PT screw 6×20	8			
33.	M45 649 226	Cord bush	4			
34.	Y50 115 709	Connector cover	2			
35.	M45 017 228	Cord band	2			
36.	Y50 115 710	Connector plate	2			
37.	H00 312 007	PTT screw 4×6	2			
38.	R50 543 489	Separator	2			
39.	D41 123 223	Lead wire clip	1			

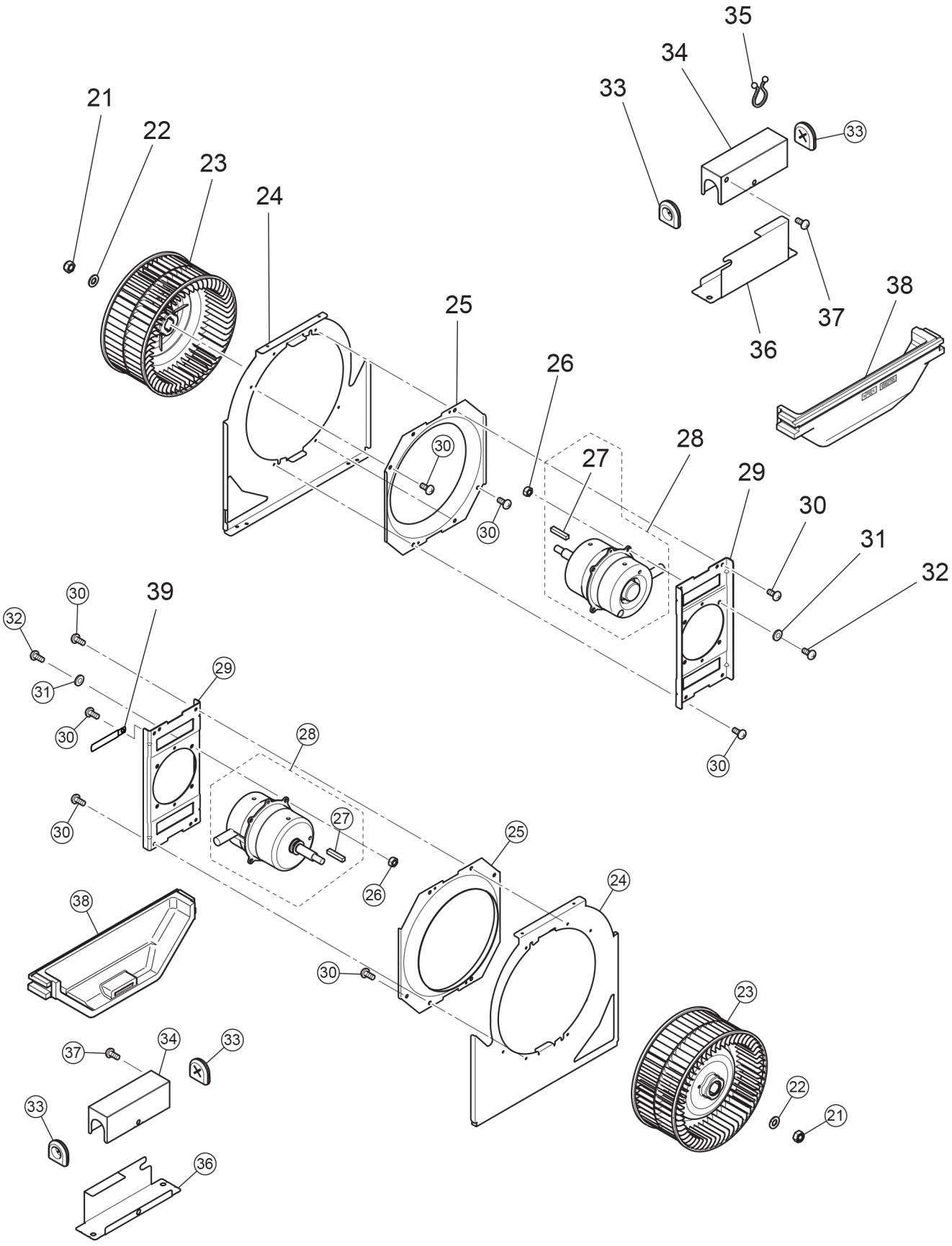
21
22
23
24
25
26
27
28
29
30
31
32
33
34
35
36
37
38
39

Model LGH-80RX5-E

No.	Parts No.	Name of part	Q'ty pcs/unit	Critical for safety	Remarks	Price
51.	R50 533 693	Fix plate	1			
52.	Y50 115 708	Damper motor cover	1			
53.	Y50 115 225	Bush	1			
54.	R50 351 225	Cord bush	1			
55.	Y50 061 260	Damper motor	1	⚠	AC220･240V	
56.	R50 054 225	Bush	1			
57.	Y50 117 151	Rod	1			
58.	Y50 115 705	Control cover	1			
59.	Y50 115 368	Wiring diagram	1			
60.	H00 003 005	PPT screw 3×8	1			
61.	Y50 115 171	Circuit board	1	⚠	LG-X3-E	
62.	H00 013 076	Lock washer(4)	2			
63.	Y50 115 216	Transformer	1	⚠	AC230V	
64.	H00 011 008	PT screw 4×8(BS)	1			
65.	Y50 115 712	Terminal block fix plate	1			
66.	K83 170 228	Cord band	2			
67.	R50 546 705	Circuit fix plate	1			
68.	R50 476 225	Bush	1			
69.	H00 000 003	PP screw 4×8	2			
70.	H00 154 005	PPT screw 4×12	1			
71.	M13 100 242	Terminal block	1	⚠	3P	
72.	Y50 117 288	Capacitor	2	⚠	7.0μF･440VAC	
73.	Y50 047 231	Connection cable	1		SLIM-LOSSNAY	
74.	R50 548 167	Thermistor	1	⚠		
75.	Y50 115 711	Side plate	1			
76.	K82 163 225	Bush	2			
77.	Y55 001 223	Cord clip	1			

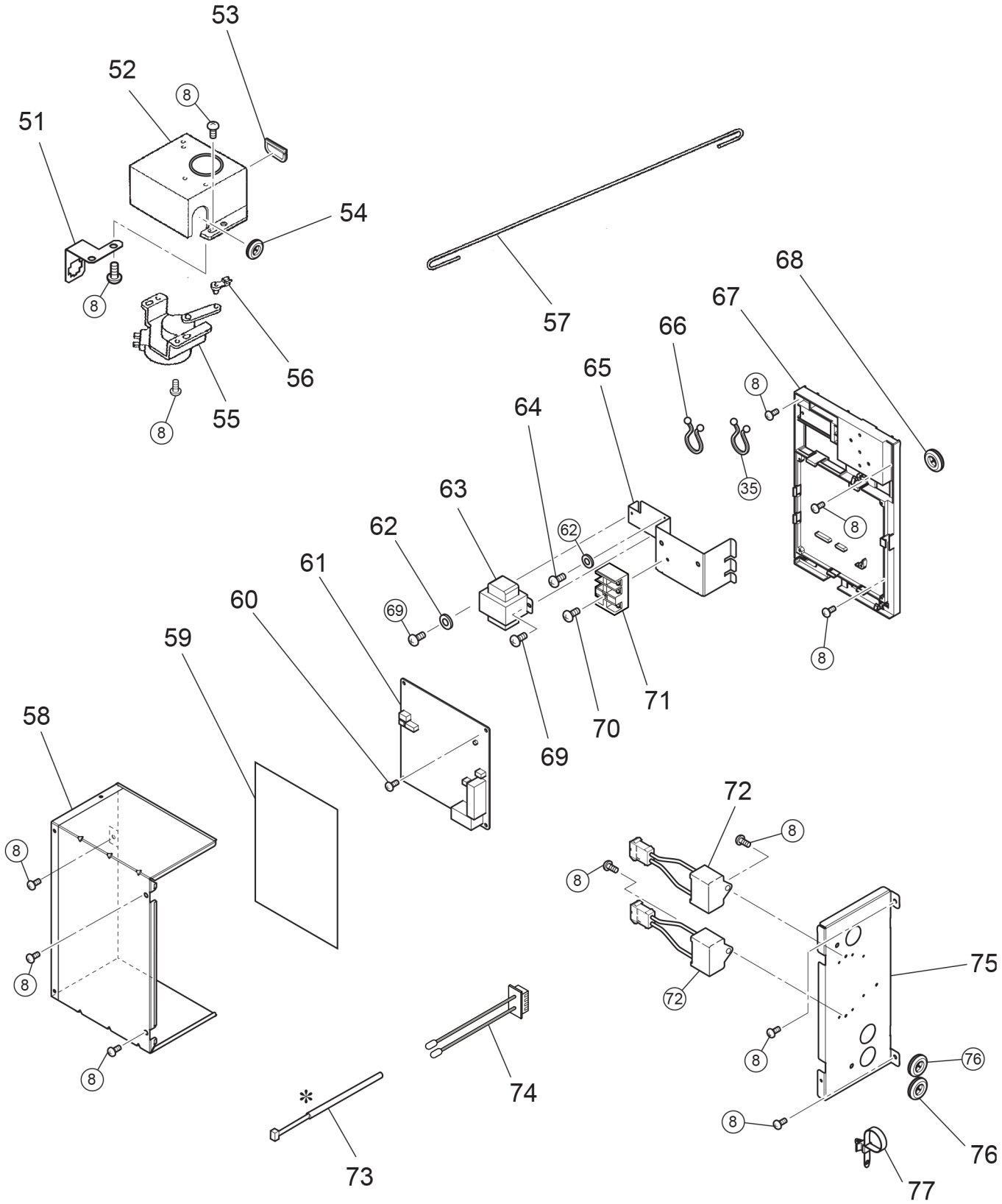

✻ shows accessory parts.

Model LGH-100RX5-E

No.	Parts No.	Name of part	Q'ty pcs/unit	Critical for safety	Remarks	Price
1.	R50 541 045	Special screw	2			
2.	R50 522 710	Filter stopper	8			
3.	R50 544 381	Core guide(left)	1			
4.	H00 000 244	PT screw 6×12	16			
5.	R50 095 380	Hanger	4			
6.	R50 543 704	Cover	2			
7.	Y50 021 609	Flange	4			
8.	H00 000 487	PTT screw 4×8	54			
9.	R50 543 487	Maintenance cover	1			
10.	R50 522 717	Filter	4	⚠		
11.	R50 544 710	Lossnay core	2	⚠	With filter stopper	
12.	R50 544 382	Core guide(right)	1			
13.	R50 466 344	Hinge	1			
14.	Y50 029 712	Fix piece	2			

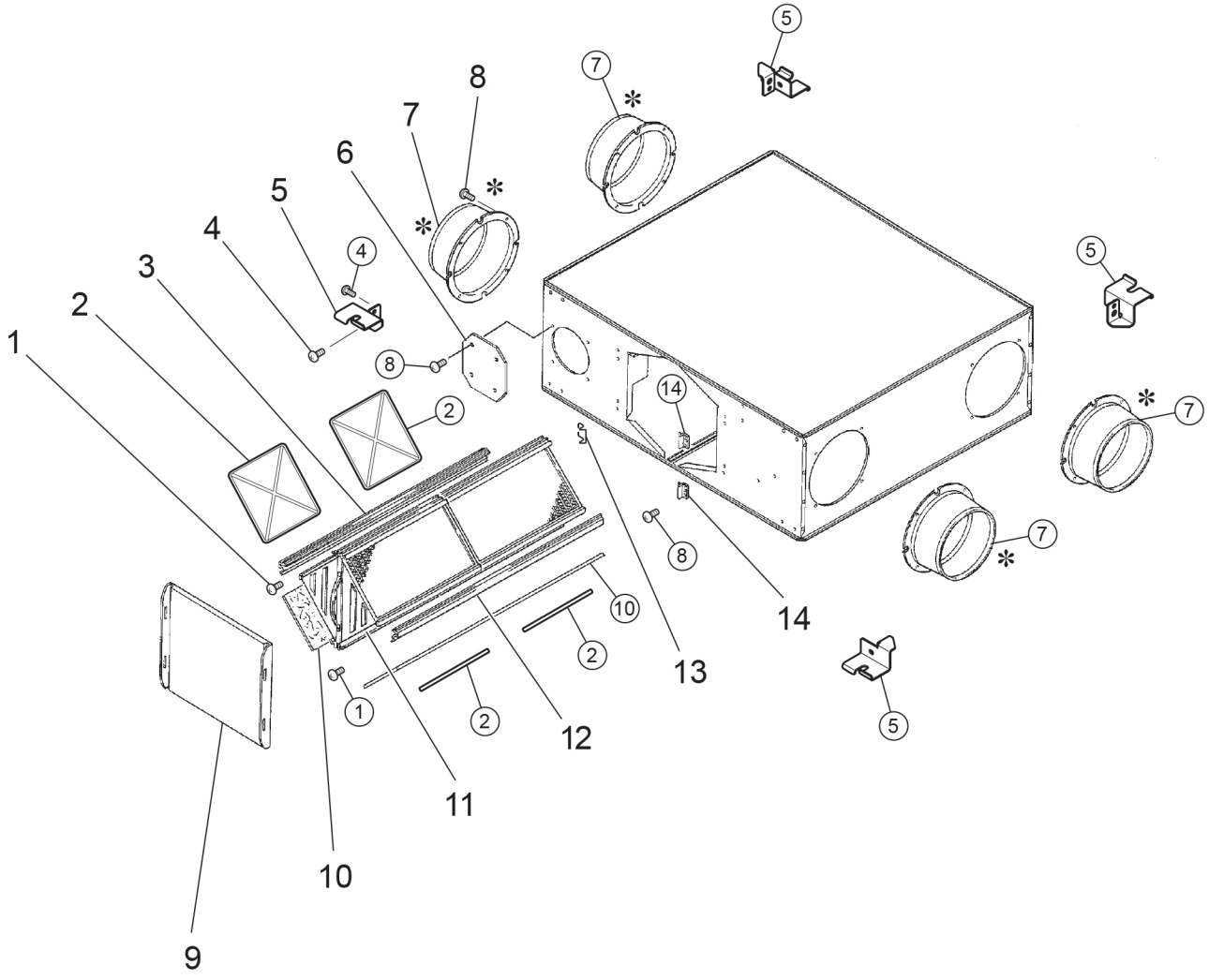

✻ shows accessory parts.

Model LGH-100RX5-E

No.	Parts No.	Name of part	Q'ty pcs/unit	Critical for safety	Remarks	Price
21.	R50 218 067	Special nut(12)	2		Left-handed	
22.	K83 466 113	Washer(12)	2			
23.	R50 543 480	Centrifugal fan	2	⚠	ϕ245	
24.	R50 543 709	Fan base	2			
25.	R50 543 708	Inlet ring	2			
26.	H00 061 050	Nut(6)	8			
27.	Y50 033 104	Key	2		5×5×11.5	
28.	Y50 118 451	Motor	2	⚠		
29.	Y50 117 712	Motor fix plate	2			
30.	H00 189 007	PTT screw 5×10	16			
31.	M34 043 080	Special washer(6)	8			
32.	H00 157 008	PT screw 6×20	8			
33.	M45 649 226	Cord bush	4			
34.	Y50 115 709	Connector cover	2			
35.	M45 017 228	Cord band	2			
36.	Y50 115 710	Connector plate	2			
37.	H00 312 007	PTT screw 4×6	2			
38.	R50 543 489	Separator	2			
39.	D41 123 223	Lead wire clip	1			

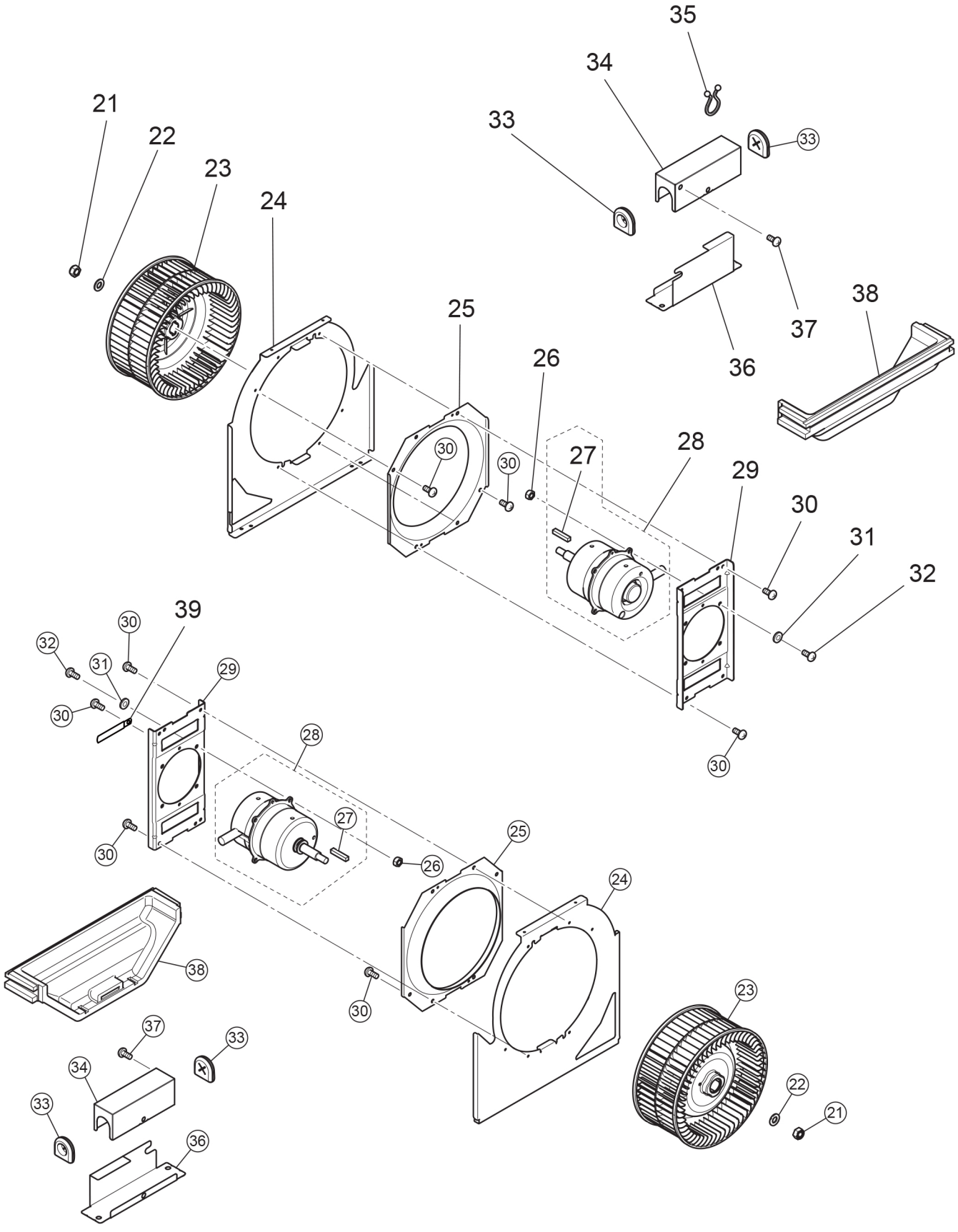
21
22
23
24
25
26
27
28
29
30
31
32
33
34
35
36
37
38
39

Model LGH-100RX5-E

No.	Parts No.	Name of part	Q'ty pcs/unit	Critical for safety	Remarks	Price
51.	R50 533 693	Fix plate	1			
52.	Y50 115 708	Damper motor cover	1			
53.	Y50 115 225	Bush	1			
54.	R50 351 225	Cord bush	1			
55.	Y50 061 260	Damper motor	1	⚠	AC220･240V	
56.	R50 054 225	Bush	1			
57.	Y50 117 151	Rod	1			
58.	Y50 115 705	Control cover	1			
59.	Y50 115 368	Wiring diagram	1			
60.	H00 003 005	PPT screw 3×8	1			
61.	Y50 115 171	Circuit board	1	⚠	LG-X3-E	
62.	H00 013 076	Lock washer(4)	2			
63.	Y50 115 216	Transformer	1	⚠	AC230V	
64.	H00 011 008	PT screw 4×8(BS)	1			
65.	Y50 115 712	Terminal block fix plate	1			
66.	K83 170 228	Cord band	2			
67.	R50 546 705	Circuit fix plate	1			
68.	R50 476 225	Bush	1			
69.	H00 000 003	PP screw 4×8	2			
70.	H00 154 005	PPT screw 4×12	1			
71.	M13 100 242	Terminal block	1	⚠	3P	
72.	Y50 118 287	Capacitor	2	⚠	9.0μF･440VAC	
73.	Y50 047 231	Connection cable	1		SLIM-LOSSNAY	
74.	R50 548 167	Thermistor	1	⚠		
75.	Y50 115 711	Side plate	1			
76.	K82 163 225	Bush	2			
77.	Y55 001 223	Cord clip	1			

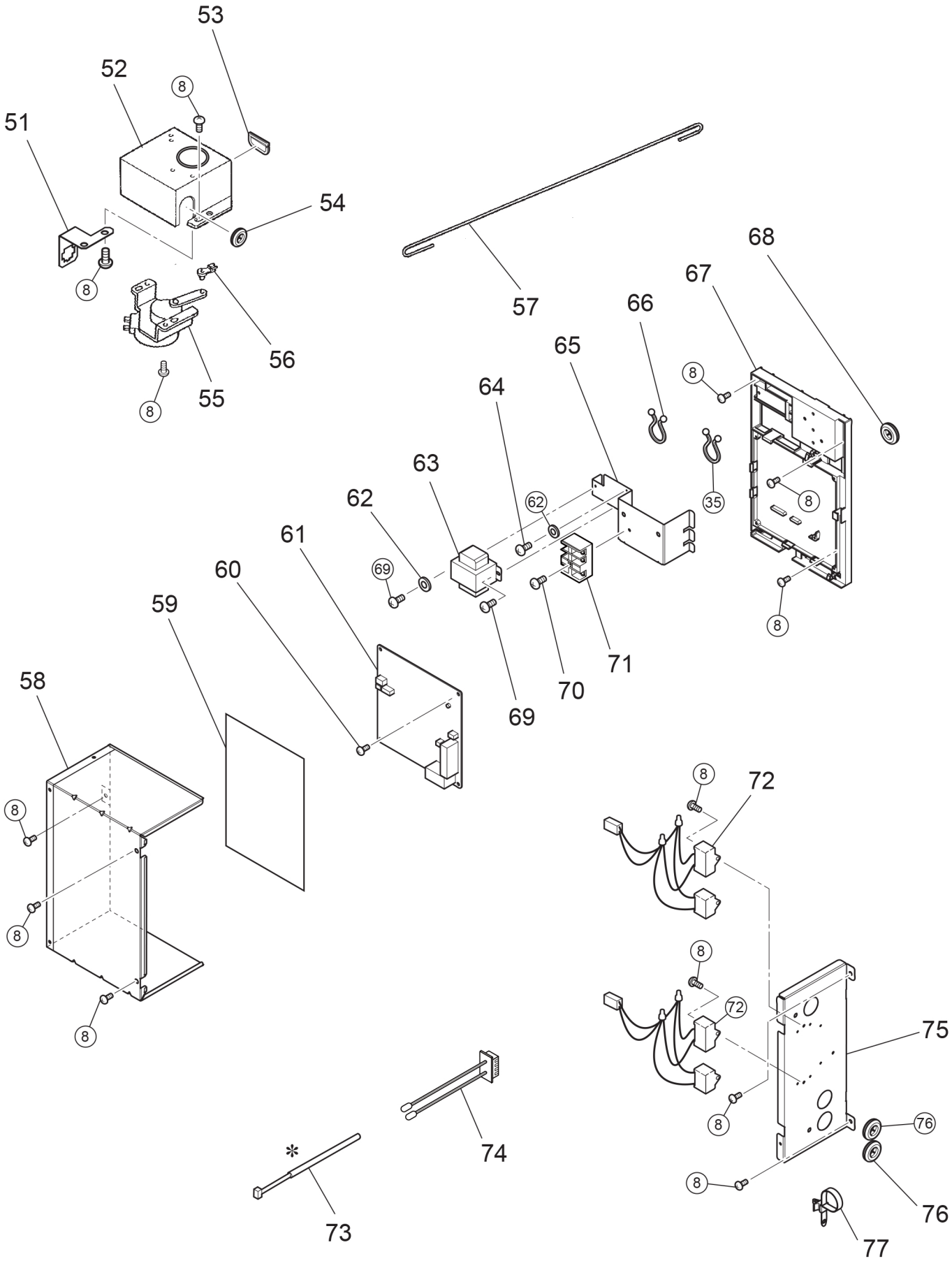

* shows accessory parts.

Model LGH-150RX5-E

No.	Parts No.	Name of part	Q'ty pcs/unit	Critical for safety	Remarks	Price
1.	R50 543 487	Maintenance cover	2			
2.	R50 541 045	Special screw	4			
3.	R50 522 710	Filter stopper	16			
4.	R50 543 383	Core guide(left)	2			
5.	H00 000 487	PTT screw 4×8	99			
6.	R50 545 704	Flange	2			
7.	R50 466 344	Hinge	2			
8.	R50 111 381	Hanger	8			
9.	H00 000 244	PT screw 6×12	40			
10.	R50 529 717	Filter	8	⚠		
11.	R50 543 711	Lossnay core	4	⚠	With filter stopper	
12.	R50 543 384	Core guide(right)	2			
13.	Y50 029 712	Fix piece	4			
14.	Y50 118 711	Fix plate	4			
15.	Y50 021 609	Flange	4			

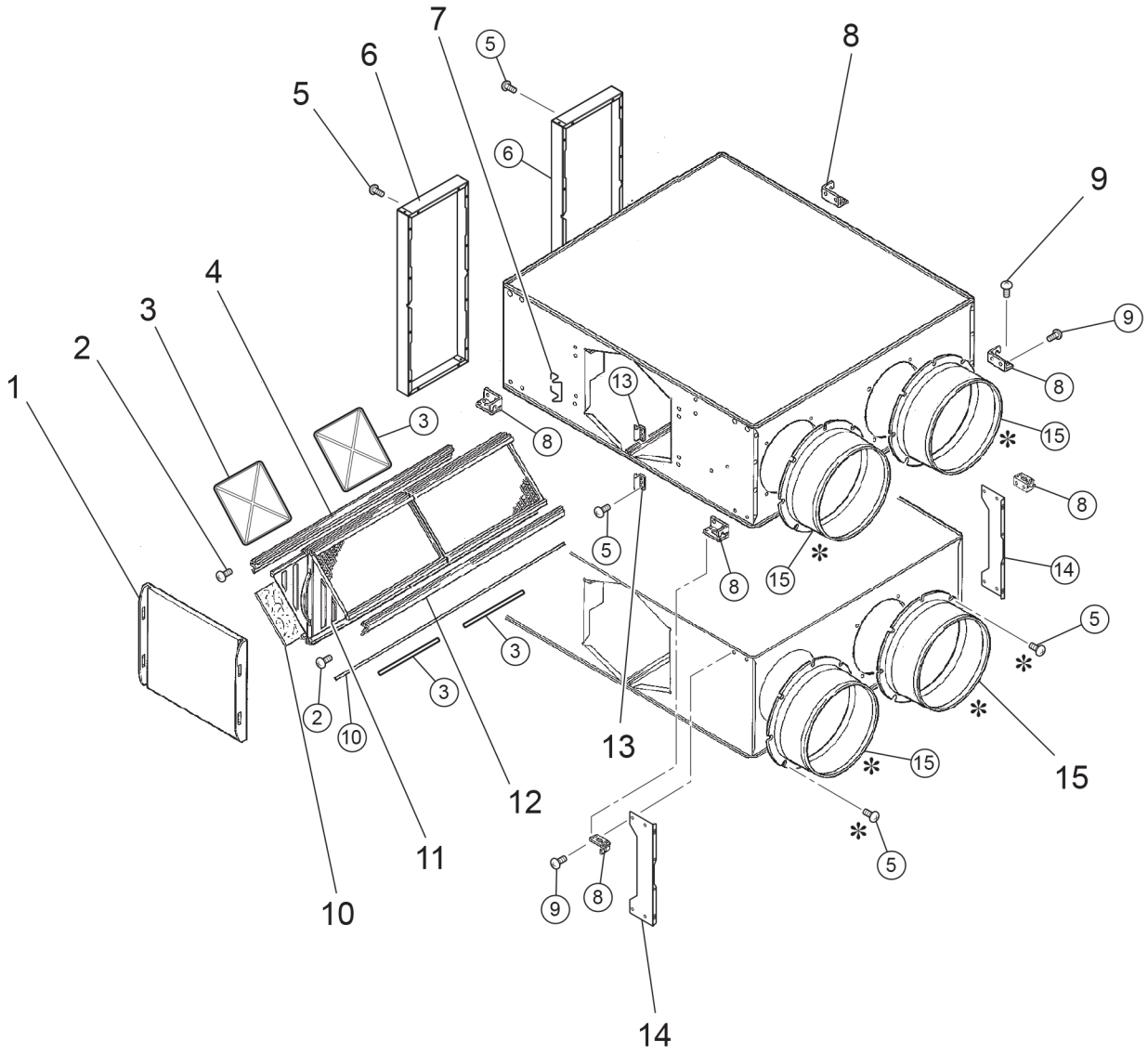
1
2
3
4
5
6
7
8
9
10
11
12
13
14
15
✻ shows accessory parts.

Model LGH-150RX5-E

No.	Parts No.	Name of part	Q'ty pcs/unit	Critical for safety	Remarks	Price
21.	R50 218 067	Special nut(12)	4		Left-handed	
22.	K83 466 113	Washer(12)	4			
23.	R50 543 480	Centrifugal fan	4	⚠	ϕ245	
24.	R50 543 709	Fan base	4			
25.	R50 543 708	Inlet ring	4			
26.	H00 061 050	Nut(6)	16			
27.	Y50 033 104	Key	4		5×5×11.5	
28.	Y50 117 454	Motor	4	⚠		
29.	Y50 117 712	Motor fix plate	4			
30.	H00 189 007	PTT screw 5×10	32			
31.	M34 043 080	Special washer(6)	16			
32.	H00 157 008	PT screw 6×20	16			
33.	M45 649 226	Cord bush	8			
34.	Y50 115 709	Connector cover	4			
35.	M45 017 228	Cord band	4			
36.	Y50 115 710	Connector plate	4			
37.	H00 312 007	PTT screw 4×6	4			
38.	R50 543 489	Separator	4			
39.	D41 123 223	Lead wire clip	2			

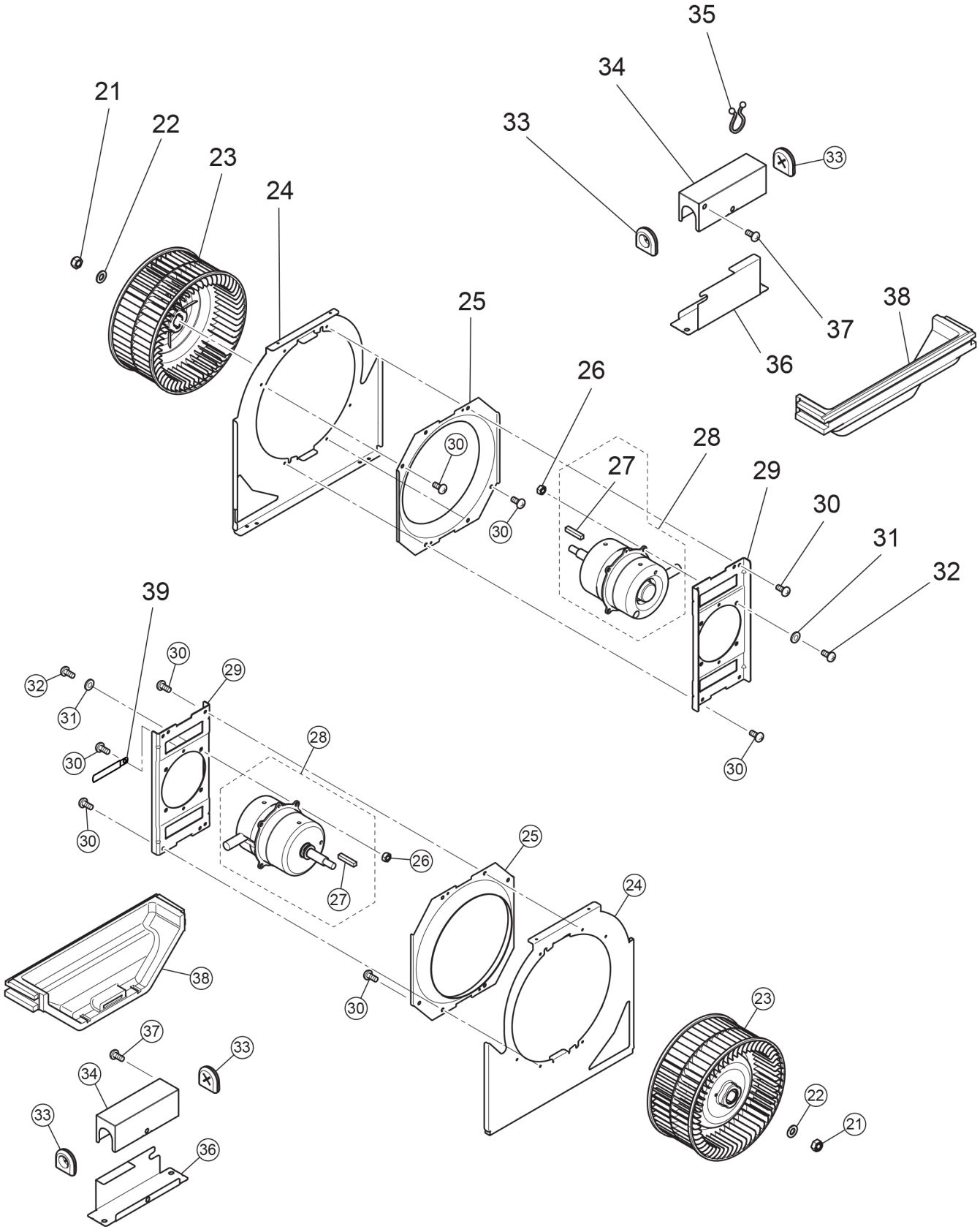
21
22
23
24
25
26
27
28
29
30
31
32
33
34
35
36
37
38
39

Model LGH-150RX5-E

No.	Parts No.	Name of part	Q'ty pcs/unit	Critical for safety	Remarks	Price
51.	R50 541 706	Damper motor cover	2			
52.	H00 013 076	Lock washer(4)	4			
53.	H00 000 349	PT screw 4×8	2			
54.	R50 541 225	Bush	2			
55.	R50 476 225	Bush	6			
56.	H00 000 007	PPT screw 4×25	4			
57.	Y50 123 260	Damper motor	2	⚠	AC100V	
58.	R50 543 150	Rod	2			
59.	Y50 118 707	Control cover	1			
60.	Y50 118 368	Wiring diagram	1			
61.	X40 181 226	Cord clamper	1			
62.	D41 133 225	Cord clamper	3			
63.	D43 008 223	Cord clamper	1			
64.	Y50 118 288	Capacitor	4	⚠	7.0μF･440VAC	
65.	Y50 118 710	Connector support	1			
66.	K83 170 228	Cord band	3			
67.	H00 000 384	PPT screw 3×6	12			
68.	Y50 009 268	Relay	6	⚠		
69.	Y50 115 171	Circuit board	1	⚠	LG-X3-E	
70.	D40 169 382	Circuit fix plate	1			
71.	H00 000 003	PP screw 4×8	6			
72.	Y50 075 216	Transformer	2	⚠	AC220･240V	
73.	Y50 118 708	Control base	1			
74.	H00 011 008	PT screw 4×8(BS)	2			
75.	R50 548 167	Thermistor	1	⚠		
76.	Y50 047 231	Connection cable	1		SLIM-LOSSNAY	
77.	H00 003 005	PPT screw 3×8	1			
78.	Y55 001 223	Cord clip	2			
79.	H00 000 488	PTT screw 4×12	1			
80.	M13 100 242	Terminal block	1	⚠	3P	
81.	Y50 118 709	Core guide(cord)	1			
82.	K83 223 225	Bush	2			
83.	Y50 138 728	Control fix plate	1			
84.	D41 004 363	Cord band	1			
85.	Y50 115 216	Transformer	1	⚠	AC230V	

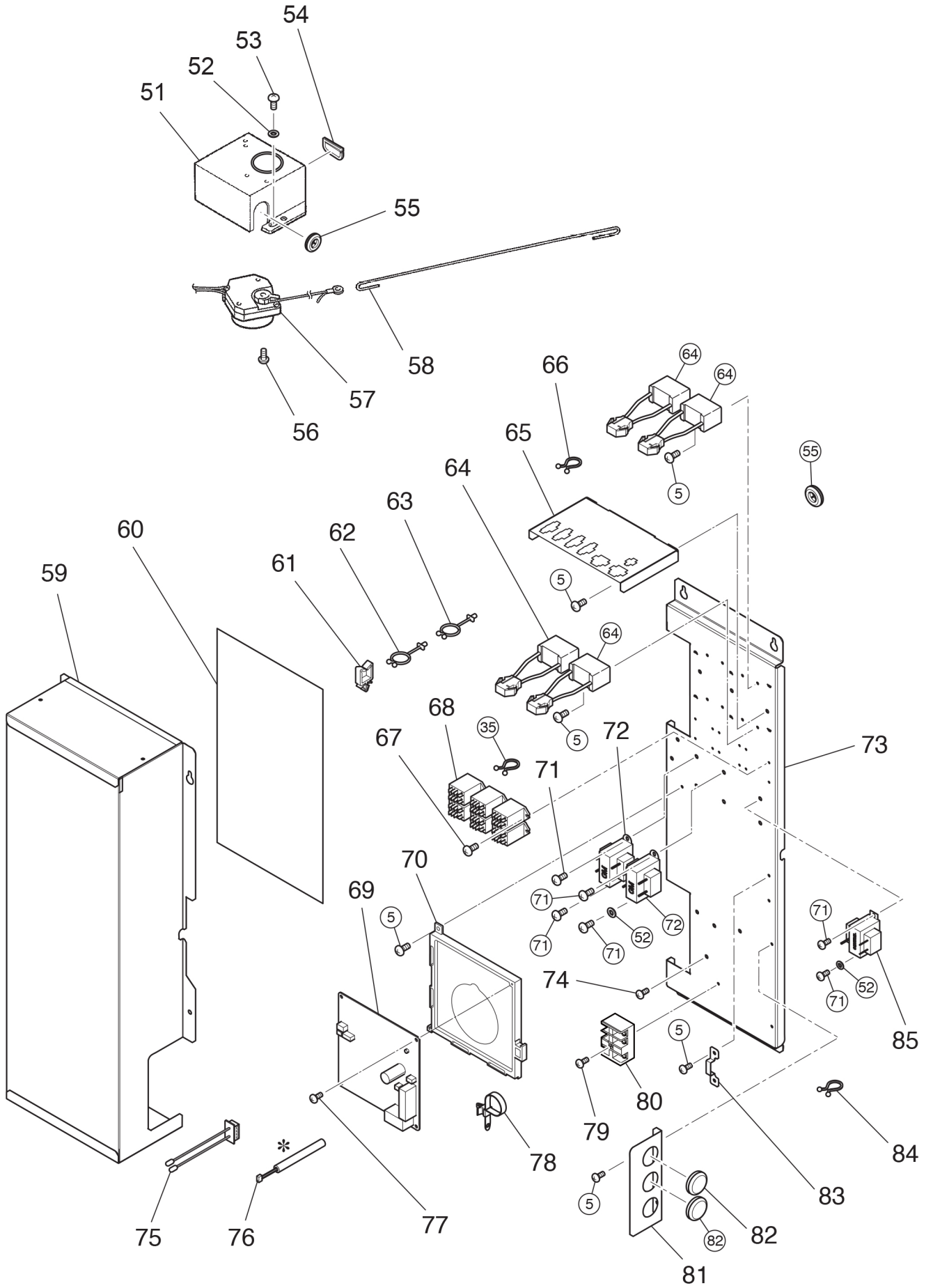

✻ shows accessory parts.

Model LGH-200RX5-E

No.	Parts No.	Name of part	Q'ty pcs/unit	Critical for safety	Remarks	Price
1.	R50 543 487	Maintenance cover	2			
2.	R50 541 045	Special screw	4			
3.	R50 522 710	Filter stopper	16			
4.	R50 544 381	Core guide(left)	2			
5.	H00 000 487	PTT screw 4×8	99			
6.	R50 545 704	Flange	2			
7.	R50 466 344	Hinge	2			
8.	R50 111 381	Hanger	8			
9.	H00 000 244	PT screw 6×12	40			
10.	R50 522 717	Filter	8	⚠		
11.	R50 544 710	Lossnay core	4	⚠	With filter stopper	
12.	R50 544 382	Core guide(right)	2			
13.	Y50 029 712	Fix piece	4			
14.	Y50 118 711	Fix plate	4			
15.	Y50 021 609	Flange	4			

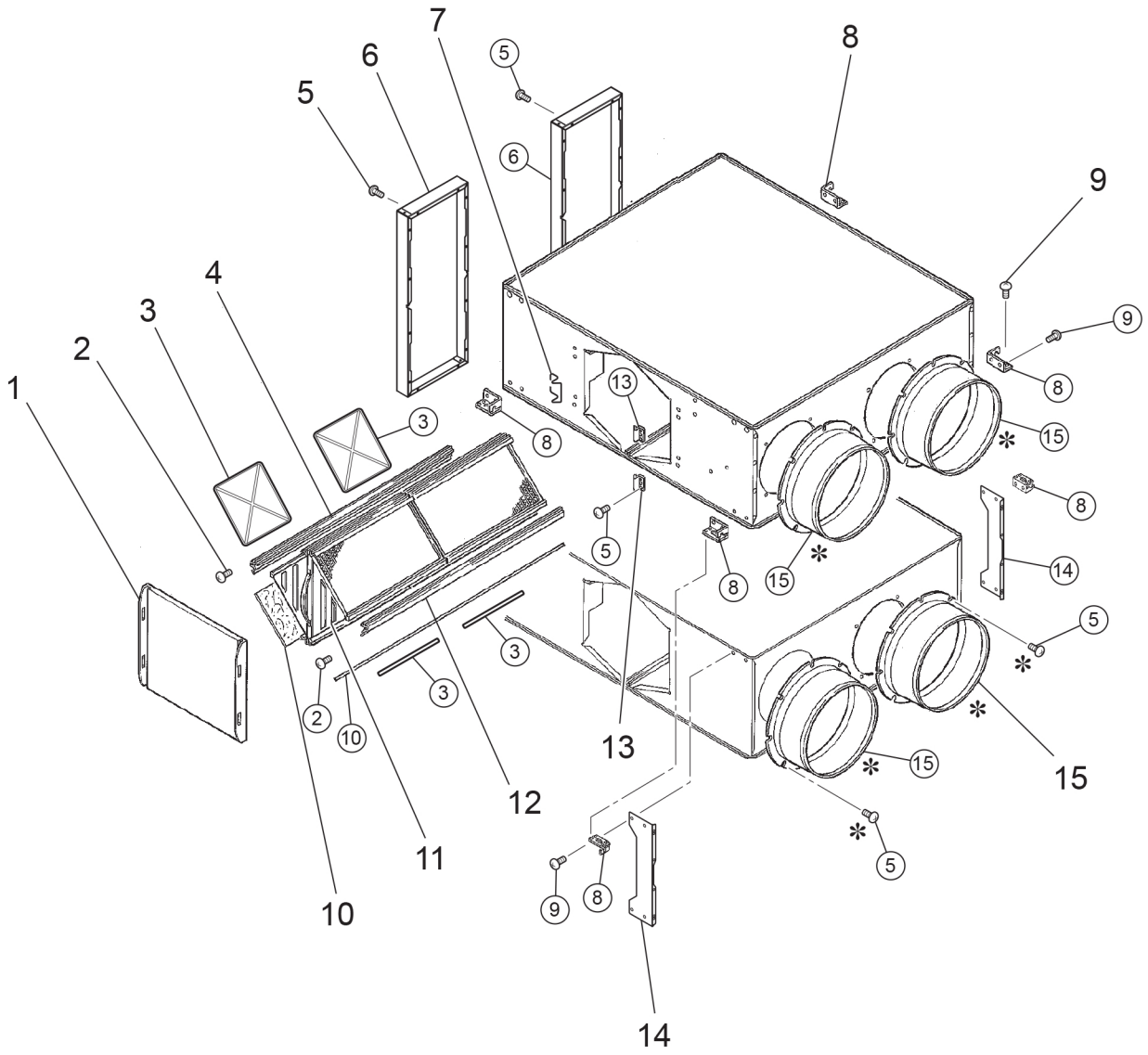

✻ shows accessory parts.

Model LGH-200RX5-E

No.	Parts No.	Name of part	Q'ty pcs/unit	Critical for safety	Remarks	Price
21.	R50 218 067	Special nut(12)	4		Left-handed	
22.	K83 466 113	Washer(12)	4			
23.	R50 543 480	Centrifugal fan	4	⚠	ϕ245	
24.	R50 543 709	Fan base	4			
25.	R50 543 708	Inlet ring	4			
26.	H00 061 050	Nut(6)	16			
27.	Y50 033 104	Key	4		5×5×11.5	
28.	Y50 118 451	Motor	4	⚠		
29.	Y50 117 712	Motor fix plate	4			
30.	H00 189 007	PTT screw 5×10	32			
31.	M34 043 080	Special washer(6)	16			
32.	H00 157 008	PT screw 6×20	16			
33.	M45 649 226	Cord bush	8			
34.	Y50 115 709	Connector cover	4			
35.	M45 017 228	Cord band	4			
36.	Y50 115 710	Connector plate	4			
37.	H00 312 007	PTT screw 4×6	4			
38.	R50 543 489	Separator	4			
39.	D41 123 223	Lead wire clip	2			

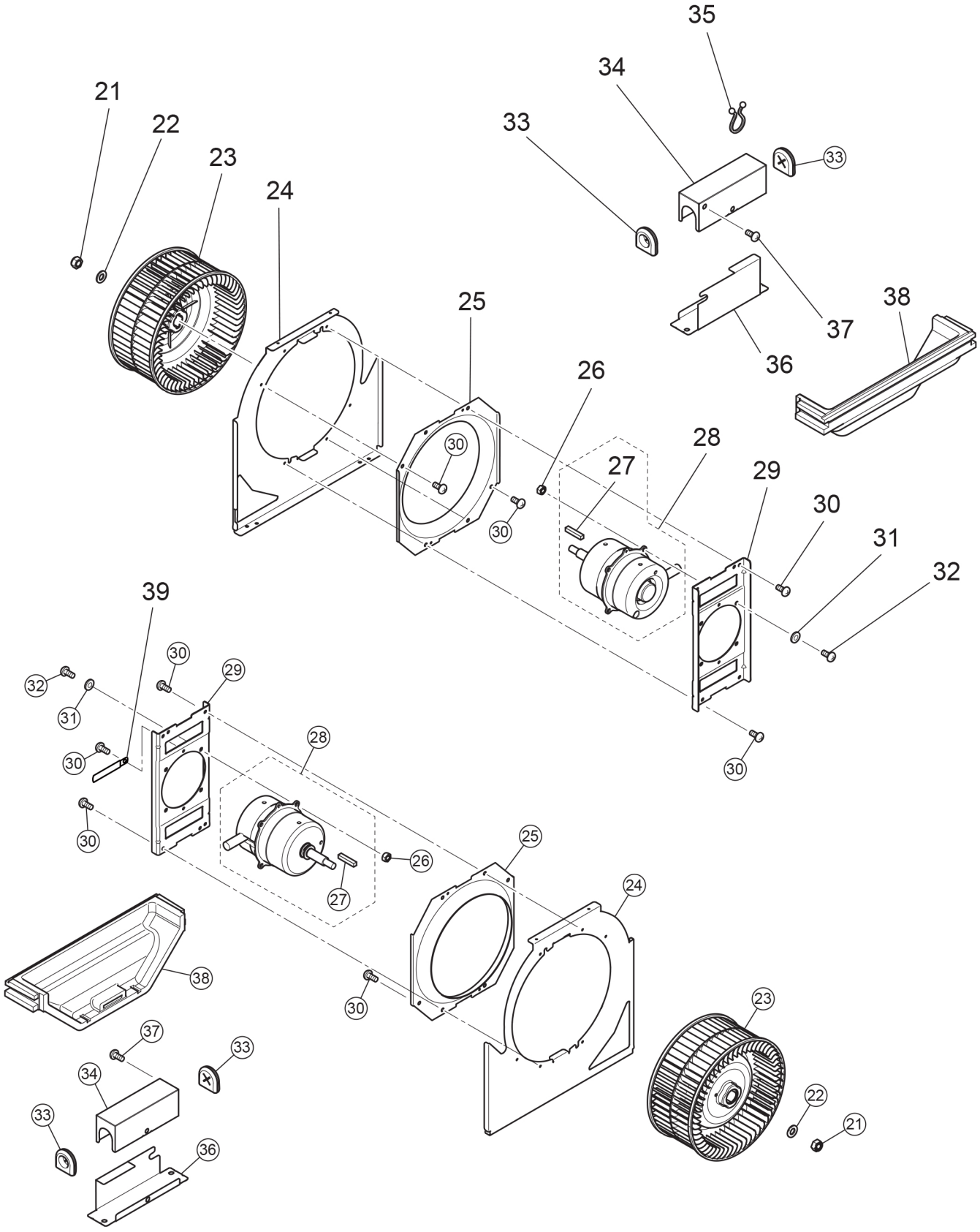
21
22
23
24
25
26
27
28
29
30
31
32
33
34
35
36
37
38
39

Model LGH-200RX5-E

No.	Parts No.	Name of part	Q'ty pcs/unit	Critical for safety	Remarks	Price
51.	R50 541 706	Damper motor cover	2			
52.	H00 013 076	Lock washer(4)	4			
53.	H00 000 349	PT screw 4×8	2			
54.	R50 541 225	Bush	2			
55.	R50 476 225	Bush	6			
56.	H00 000 007	PPT screw 4×25	4			
57.	Y50 123 260	Damper motor	2	⚠	AC100V	
58.	R50 543 150	Rod	2			
59.	Y50 118 707	Control cover	1			
60.	Y50 118 368	Wiring diagram	1			
61.	X40 181 226	Cord clamper	1			
62.	D41 133 225	Cord clamper	3			
63.	D43 008 223	Cord clamper	1			
64.	Y50 119 287	Capacitor	4	⚠	9.0μF･440VAC	
65.	K83 170 228	Cord band	3			
66.	H00 000 384	PPT screw 3×6	12			
67.	Y50 009 268	Relay	6	⚠		
68.	Y50 118 708	Control base	1			
69.	Y50 118 710	Connector support	1			
70.	Y50 115 171	Circuit board	1	⚠	LG-X3-E	
71.	D40 169 382	Circuit fix plate	1			
72.	H00 000 003	PP screw 4×8	6			
73.	Y50 075 216	Transformer	2	⚠	AC220･240V	
74.	H00 011 008	PT screw 4×8(BS)	2			
75.	Y50 119 167	Thermistor	1	⚠		
76.	Y50 047 231	Connection cable	1		SLIM-LOSSNAY	
77.	H00 003 005	PPT screw 3×8	1			
78.	Y55 001 223	Cord clip	2			
79.	H00 000 488	PTT screw 4×12	1			
80.	M13 100 242	Terminal block	1	⚠	3P	
81.	Y50 118 709	Core guide(cord)	1			
82.	K83 223 225	Bush	2			
83.	Y50 138 728	Control fix plate	1			
84.	D41 004 363	Cord band	1			
85.	Y50 115 216	Transformer	1	⚠	AC230V	

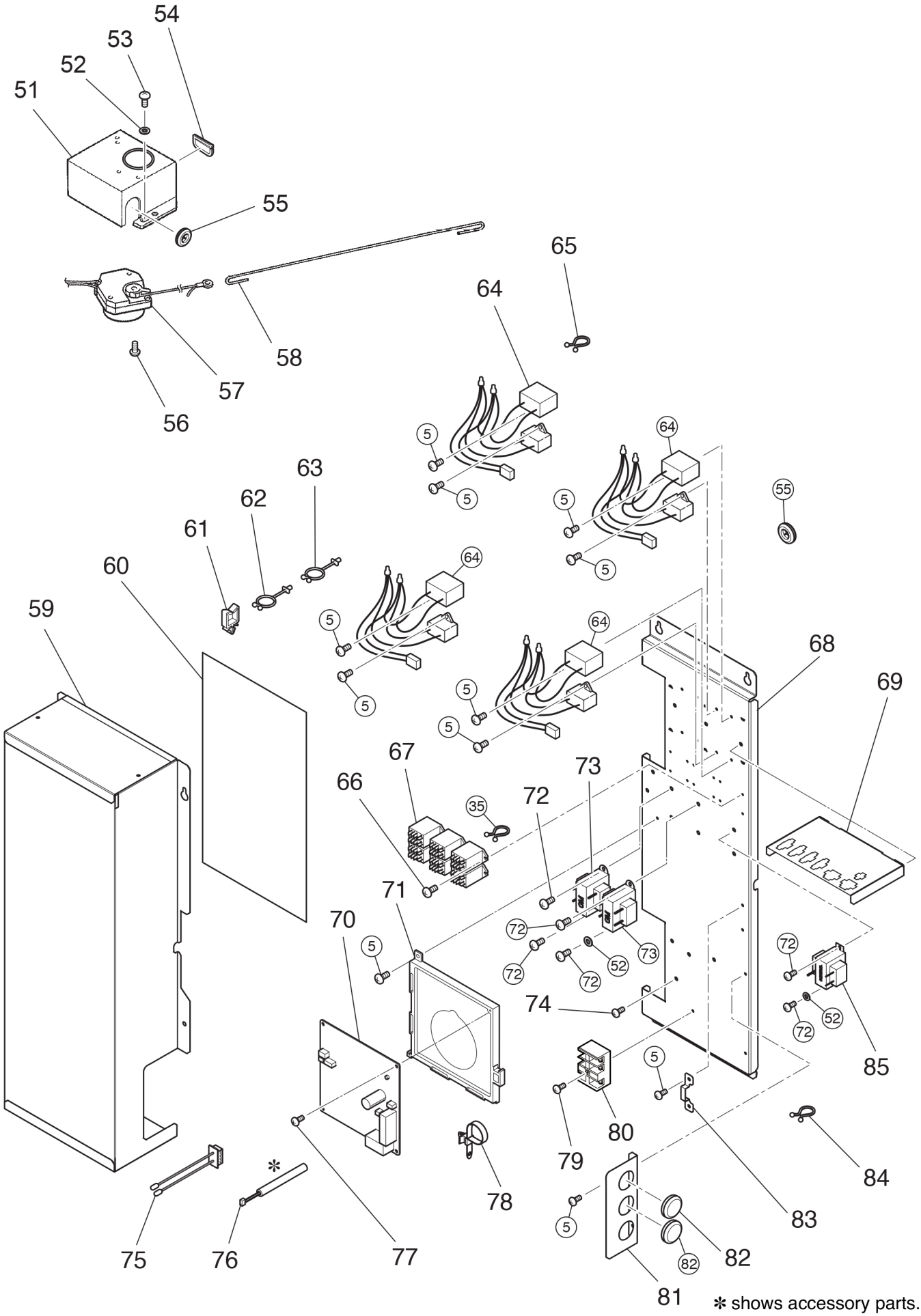

✻ shows accessory parts.

Printed in Japan
January, 2009
24 <MEE>