March 2006 No. U111
(Revised to RoHS)

LOSSNAY

HAND BOOK

FOR DEALERS

Model: LGH-15RX4-E
LGH-25RX4-E
LGH-35RX4-E
LGH-50RX4-E
LGH-65RX4-E
LGH-80RX4-E
LGH-100RX4-E

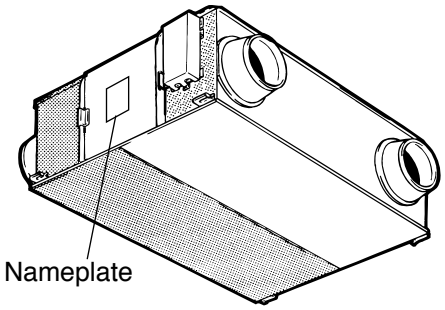

LGH-150RX4-E
LGH-200RX4-E

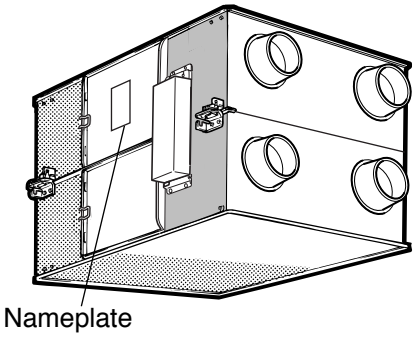

Repair work should be performed by the manufacturer, its service agent or similarly qualified person in order to avoid a hazard.

Notice:
The term of validity is one year from the issued date.

MITSUBISHI ELECTRIC CORPORATION

Contents

Safety precautions 3

1. Specifications 4-8

2. Dimensions 9-17

3. Wiring diagrams 18-19

4. Troubleshooting 20-34

4-1 Service Flow 20-21

4-2 Items to Check 22-33

4-3 Circuit Test Point 34

5. Overhaul procedures 35-39

5-1 Blower Parts 35-36

5-2 Damper Movement Motor Part (All units available) 37

5-3 Circuit Board Part 37-39

6. Parts list 40-76

LGH-15RX4-E 41-44

LGH-25RX4-E 45-48

LGH-35RX4-E 49-52

LGH-50RX4-E 53-56

LGH-65RX4-E 57-60

LGH-80RX4-E 61-64

LGH-100RX4-E 65-68

LGH-150RX4-E 69-72

LGH-200RX4-E 73-76

Safety precautions

- Please be sure to read the following safety precautions thoroughly before commencing with the maintenance work, and conduct the inspection and repair of the product in a safe manner.
- The types and levels of danger that may arise if the product is handled incorrectly are described by using the warning symbols shown below.

⚠ Warning

Incorrect handling of the product may result in serious injury or death.

◇Electric shock
If you must inspect the circuitry while the power is on, do not touch the live parts.

(Failure to heed this warning may result in electric shock.)

Caution for electric shock

◇Turn off the power supply
Be sure to shut off the breaker before disassembling the unit for repair.

(Failure to heed this warning may result in electric shock.)

Be sure to follow this instruction.

◇Modification is prohibited
Do not modify the unit.

(Failure to heed this warning may result in electric shock, fire and/or bodily injury.)

Prohibited

◇Use proper parts and tools
For repair, be sure to use the parts listed in the service parts list of the applicable unit model and use the proper tools.

(Failure to heed this warning may result in electric shock, fire and/or bodily injury.)

Be sure to follow this instruction.

◇Proper electric work
Use the electric wires designated for electric work, and conduct electric work in accordance with the "Electric Installation Engineering Standard," the "Indoor Wiring Regulations," and the Installation Work Guide.

(Incomplete connection or wiring installation may result in electric shock and/or fire.)

Be sure to follow this instruction.

◇Replace damaged and/or degraded parts
Be sure to replace the power-supply cord and lead wire in the event that they are damaged and/or degraded.

(Failure to heed this warning may result in electric shock and/or fire.)

Be sure to follow this instruction.

◇Check insulation
Be sure to measure the insulation resistance once the repair work is complete, and turn on the power supply after verifying that an insulation resistance of at least 10MΩ is obtained.

(If an insulation problem exists, it may result in electric shock.)

Be sure to follow this instruction.

⚠ Caution

Incorrect handling of the product may result in serious injury or damage to properties including buildings and equipment.

◇Caution for bodily injury
Do not conduct any work at a location where you do not have a sure footing.

(Failure to heed this caution may result in a fall.)

Prohibited

◇Wear gloves
Wear gloves when conducting work.

(Failure to heed this caution may result in injury to your hands from sharp metal or other edges.)

Be sure to follow this instruction.

Request during repair

•Inspect the grounding, and repair it if incomplete.

- Make sure that the product operates correctly upon completion of repair. Clean the product as well as the surrounding area, and then notify the customer of the completion of repair.

1. Specifications

MODEL		LGH-15RX4-E											
Heat exchange system		Air-to-air total heat exchange(sensible heat + latent heat)exchange											
Heat exchange element material		Partition・spacing plate-special treated paper											
Cladding		Galvanized steel sheet											
Heat insulating material		Self-extinguishing urethane foam											
Motor		Totally enclosed capacitor permanent split-phase induction motor.4 poles,2 units											
Blower		180mm dia. Centrifugal fan											
Filter material		Non-woven fabrics filter(Gravitational method 82%)											
Operation enviroment(Supply air)		-10℃ to 40℃,RH 80% or less											
Operation and room air temperature		OA temperature shall be -15℃ to +40℃, less than 80%RH, with general air conditioning room environment. Subject to outdoor air conditioning unit. Pre-Heat OA in the case of using Lossnay in the cold region less than -15℃.											
Functions		Lossnay ventilation/Bypass ventilation High(Extra high)-Low switching											
Weight		17kg											
Power source		Single phase 220-240V											
Frequency		50Hz						60Hz					
Ventilation mode		Lossnay ventilation			Bypass ventilation			Lossnay ventilation			Bypass ventilation		
Fan speed		Extra high	High	Low	Extra high	High	Low	Extra high	High	Low	Extra high	High	Low
Current	(A)	0.42-0.45	0.29-0.31	0.21-0.22	0.42-0.45	0.30-0.31	0.21-0.22	0.49-0.51	0.33-0.35	0.23-0.24	0.49-0.52	0.33-0.35	0.23-0.24
Power consumption	(W)	92-107	63-73	45-51	92-107	64-73	45-51	107-122	72-84	49-57	107-123	72-84	49-57
Air volume	(m^3/h)	150	150	110	150	150	110	150	150	100	150	150	100
	(L/s)	42	42	31	42	42	31	42	42	28	42	42	28
External static pressure	(mmH_2O)	9.7	6.1	3.6	9.7	6.1	3.6	14.3	8.2	4.1	14.3	8.2	4.1
	(Pa)	95	60	35	95	60	35	140	80	40	140	80	40
Temperature exchange efficiency (%)		77	77	81	–	–	–	77	77	82	–	–	–
Enthalpy exchange efficiency (%)	Heating	70	70	74	–	–	–	70	70	75	–	–	–
	Cooling	64.5	64.5	70	–	–	–	64.5	64.5	71	–	–	–
Noise (dB)	Measured at 1.5m under the center of panel	26-27	24-25	22-23	26-27	24-25	22-23	28-29	25-26	22-23	28-29	25.5-26.5	22-23
	Air outlets	33-34	30-31.5	26-27.5	33-34	30-31.5	26-27	35.5-36.5	31-32.5	27-28	35.5-36.5	31.5-33	27.5-28
Starting current		Under 0.7A less											
Insulation resistance		10MΩ or more(500V megger)											
Dielectric strength		AC 1500V 1 minute											

MODEL		LGH-25RX4-E											
Heat exchange system		Air-to-air total heat exchange(sensible heat + latent heat)exchange											
Heat exchange element material		Partition・spacing plate-special treated paper											
Cladding		Galvanized steel sheet											
Heat insulating material		Self-extinguishing urethane foam											
Motor		Totally enclosed capacitor permanent split-phase induction motor.4 poles,2 units											
Blower		180mm dia. Centrifugal fan											
Filter material		Non-woven fabrics filter(Gravitational method 82%)											
Operation enviroment(Supply air)		-10℃ to 40℃,RH 80% or less											
Operation and room air temperature		OA temperature shall be -15℃ to +40℃, less than 80%RH, with general air conditioning room environment. Subject to outdoor air conditioning unit. Pre-Heat OA in the case of using Lossnay in the cold region less than -15℃.											
Functions		Lossnay ventilation/Bypass ventilation High(Extra high)-Low switching											
Weight		21kg											
Power source		Single phase 220-240V											
Frequency		50Hz						60Hz					
Ventilation mode		Lossnay ventilation			Bypass ventilation			Lossnay ventilation			Bypass ventilation		
Fan speed		Extra high	High	Low	Extra high	High	Low	Extra high	High	Low	Extra high	High	Low
Current	(A)	0.47-0.49	0.39-0.40	0.24-0.25	0.47-0.49	0.39-0.40	0.24-0.25	0.55-0.58	0.45-0.47	0.26-0.27	0.55-0.58	0.45-0.47	0.26-0.27
Power consumption	(W)	103-117	85-96	52-59	103-117	85-96	52-59	121-139	98-112	56-64	121-139	98-112	56-64
Air volume	(m^3/h)	250	250	165	250	250	165	250	250	150	250	250	150
	(L/s)	69	69	46	69	69	46	69	69	42	69	69	42
External static pressure	(mmH_2O)	8.2	5.1	2.5	8.2	5.1	2.5	11.2	6.1	2.5	11.2	6.1	2.5
	(Pa)	80	50	25	80	50	25	110	60	25	110	60	25
Temperature exchange efficiency (%)		78	78	83.5	–	–	–	78	78	84.5	–	–	–
Enthalpy exchange efficiency (%)	Heating	70	70	77	–	–	–	70	70	78	–	–	–
	Cooling	65	65	71	–	–	–	65	65	72	–	–	–
Noise (dB)	Measured at 1.5m under the center of panel	26.5-27.5	25-26	22-23	27-28	25.5-26.5	22-23	28.5-29.5	25.5-26.5	22-23	29-30	26-27	22-23
	Air outlets	34.5-36	33-34	27-28	35-36	33.5-34.5	27-28	36.5-37.5	33.5-34.5	27-28	37-38	34-35	27-28
Starting current		Under 0.8A less											
Insulation resistance		10MΩ or more(500V megger)											
Dielectric strength		AC 1500V 1 minute											

MODEL		LGH-35RX4-E											
Heat exchange system		Air-to-air total heat exchange(sensible heat + latent heat)exchange											
Heat exchange element material		Partition・spacing plate-special treated paper											
Cladding		Galvanized steel sheet											
Heat insulating material		Self-extinguishing urethane foam											
Motor		Totally enclosed capacitor permanent split-phase induction motor.4 poles,2 units											
Blower		220mm dia. Centrifugal fan											
Filter material		Non-woven fabrics filter(Gravitational method 82%)											
Operation enviroment(Supply air)		-10℃ to 40℃,RH 80% or less											
Operation and room air temperature		OA temperature shall be -15℃ to +40℃, less than 80%RH, with general air conditioning room environment. Subject to outdoor air conditioning unit. Pre-Heat OA in the case of using Lossnay in the cold region less than -15℃.											
Functions		Lossnay ventilation/Bypass ventilation High(Extra high)-Low switching											
Weight		30kg											
Power source		Single phase 220-240V											
Frequency		50Hz						60Hz					
Ventilation mode		Lossnay ventilation			Bypass ventilation			Lossnay ventilation			Bypass ventilation		
Fan speed		Extra high	High	Low	Extra high	High	Low	Extra high	High	Low	Extra high	High	Low
Current	(A)	0.78-0.79	0.71-0.71	0.46-0.48	0.81-0.82	0.72-0.73	0.46-0.49	0.99-0.99	0.83-0.87	0.46-0.50	1.00-1.00	0.83-0.86	0.46-0.50
Power consumption	(W)	169-187	154-167	97-110	176-192	156-172	97-111	215-236	180-207	97-117	217-236	180-206	97-117
Air volume	(m^3/h)	350	350	230	350	350	230	350	350	210	350	350	210
	(L/s)	97	97	64	97	97	64	97	97	58	97	97	58
External static pressure	(mmH_2O)	15.3	7.1	2.5	15.3	7.1	2.5	19.4	5.1	2.0	19.4	5.1	2.0
	(Pa)	150	70	25	150	70	25	190	50	20	190	50	20
Temperature exchange efficiency	(%)	79	79	84	—	—	—	79	79	85	—	—	—
Enthalpy exchange efficiency (%)	Heating	70	70	77	—	—	—	70	70	78	—	—	—
	Cooling	68	68	74.5	—	—	—	68	68	76	—	—	—
Noise (dB)	Measured at 1.5m under the center of panel	31-32	28-30	23-24	31.5-32.5	28-30	23-24	32-33	27-29	21-22	33-34	28-30	21-22
	Air outlets	39-40	35-37	28-29	39.5-40.5	35.5-37.5	28-29	40-41	34-36	26-27	41-42	35-37	26-27
Starting current		Under 1.7A less											
Insulation resistance		10MΩ or more(500V megger)											
Dielectric strength		AC 1500V 1 minute											

MODEL		LGH-50RX4-E											
Heat exchange system		Air-to-air total heat exchange(sensible heat + latent heat)exchange											
Heat exchange element material		Partition・spacing plate-special treated paper											
Cladding		Galvanized steel sheet											
Heat insulating material		Self-extinguishing urethane foam											
Motor		Totally enclosed capacitor permanent split-phase induction motor.4 poles,2 units											
Blower		220mm dia. Centrifugal fan											
Filter material		Non-woven fabrics filter(Gravitational method 82%)											
Operation enviroment(Supply air)		-10℃ to 40℃,RH 80% or less											
Operation and room air temperature		OA temperature shall be -15℃ to +40℃, less than 80%RH, with general air conditioning room environment. Subject to outdoor air conditioning unit. Pre-Heat OA in the case of using Lossnay in the cold region less than -15℃.											
Functions		Lossnay ventilation/Bypass ventilation High(Extra high)-Low switching											
Weight		33kg											
Power source		Single phase 220-240V											
Frequency		50Hz						60Hz					
Ventilation mode		Lossnay ventilation			Bypass ventilation			Lossnay ventilation			Bypass ventilation		
Fan speed		Extra high	High	Low	Extra high	High	Low	Extra high	High	Low	Extra high	High	Low
Current	(A)	0.94-0.95	0.89-0.90	0.57-0.60	0.95-0.96	0.90-0.93	0.58-0.60	1.21-1.27	1.05-1.10	0.60-0.63	1.22-1.25	1.05-1.09	0.60-0.63
Power consumption	(W)	204-225	193-214	123-142	206-228	196-221	125-142	262-291	231-262	130-151	263-288	228-261	130-151
Air volume	(m^3/h)	500	500	350	500	500	350	500	500	300	500	500	300
	(L/s)	139	139	97	139	139	97	139	139	83	139	139	83
External static pressure	(mmH_2O)	15.3	6.1	3.1	15.3	6.1	3.1	20.4	6.1	2.0	20.4	6.1	2.0
	(Pa)	150	60	30	150	60	30	200	60	20	200	60	20
Temperature exchange efficiency	(%)	77	77	82	—	—	—	77	77	83.5	—	—	—
Enthalpy exchange efficiency (%)	Heating	67.5	67.5	73.5	—	—	—	67.5	67.5	75.5	—	—	—
	Cooling	64.5	64.5	71.5	—	—	—	64.5	64.5	73.5	—	—	—
Noise (dB)	Measured at 1.5m under the center of panel	33-34	29.5-31.5	23.5-24.5	34-35.5	31-33	24.5-25.5	33-35.5	28.5-31	23-24	34.5-36	30-32	23-24
	Air outlets	41-42	37.5-39.5	29.5-30.5	42-43.5	39-41	30.5-31.5	41-43.5	36.5-39	29-30	42.5-44	38-40	29-30
Starting current		Under 1.9A less						Under 1.8A less					
Insulation resistance		10MΩ or more(500V megger)											
Dielectric strength		AC 1500V 1 minute											

MODEL		LGH-65RX4-E											
Heat exchange system		Air-to-air total heat exchange(sensible heat + latent heat)exchange											
Heat exchange element material		Partition・spacing plate-special treated paper											
Cladding		Galvanized steel sheet											
Heat insulating material		Self-extinguishing urethane foam											
Motor		Totally enclosed capacitor permanent split-phase induction motor.4 poles,2 units											
Blower		245mm dia. Centrifugal fan											
Filter material		Non-woven fabrics filter(Gravitational method 82%)											
Operation enviroment(Supply air)		-10℃ to 40℃,RH 80% or less											
Operation and room air temperature		OA temperature shall be -15℃ to +40℃, less than 80%RH, with general air conditioning room environment. Subject to outdoor air conditioning unit. Pre-Heat OA in the case of using Lossnay in the cold region less than -15℃.											
Functions		Lossnay ventilation/Bypass ventilation High(Extra high)-Low switching											
Weight		46kg											
Power source		Single phase 220-240V											
Frequency		50Hz						60Hz					
Ventilation mode		Lossnay ventilation			Bypass ventilation			Lossnay ventilation			Bypass ventilation		
Fan speed		Extra high	High	Low	Extra high	High	Low	Extra high	High	Low	Extra high	High	Low
Current	(A)	1.40-1.40	1.30-1.30	0.85-0.90	1.40-1.40	1.30-1.30	0.85-0.90	1.80-1.80	1.50-1.60	0.90-1.00	1.80-1.80	1.50-1.60	0.90-1.00
Power consumption	(W)	295-325	270-300	185-210	300-330	275-305	185-210	380-430	320-370	195-230	380-430	325-375	195-230
Air volume	(m^3/h)	650	650	500	650	650	500	650	650	440	650	650	440
	(L/s)	181	181	139	181	181	139	181	181	122	181	181	122
External static pressure	(mmH_2O)	11.2	5.1	3.1	11.2	5.1	3.1	18.9	7.1	3.6	18.9	7.1	3.6
	(Pa)	110	50	30	110	50	30	185	70	35	185	70	35
Temperature exchange efficiency	(%)	76	76	79	–	–	–	76	76	80	–	–	–
Enthalpy exchange efficiency (%)	Heating	68	68	71.5	–	–	–	68	68	73.5	–	–	–
	Cooling	64.5	64.5	69	–	–	–	64.5	64.5	71	–	–	–
Noise (dB)	Measured at 1.5m under the center of panel	34.5-35	32.5-33	27-28	35.5-36	33.5-34	27.5-28.5	35.5-36	32.5-33	27-28	36.5-37	33.5-34	27.5-28.5
	Air outlets	42.5-43	40.5-41	35-36	43.5-44	41.5-42	35.5-36.5	43.5-44	40.5-41	35-36	44.5-45	41.5-42	35.5-36.5
Starting current		Under 2.8A less						Under 2.6A less					
Insulation resistance		10MΩ or more(500V megger)											
Dielectric strength		AC 1500V 1 minute											

MODEL		LGH-80RX4-E											
Heat exchange system		Air-to-air total heat exchange(sensible heat + latent heat)exchange											
Heat exchange element material		Partition・spacing plate-special treated paper											
Cladding		Galvanized steel sheet											
Heat insulating material		Self-extinguishing urethane foam											
Motor		Totally enclosed capacitor permanent split-phase induction motor.4 poles,2 units											
Blower		245mm dia. Centrifugal fan											
Filter material		Non-woven fabrics filter(Gravitational method 82%)											
Operation enviroment(Supply air)		-10℃ to 40℃,RH 80% or less											
Operation and room air temperature		OA temperature shall be -15℃ to +40℃, less than 80%RH, with general air conditioning room environment. Subject to outdoor air conditioning unit. Pre-Heat OA in the case of using Lossnay in the cold region less than -15℃.											
Functions		Lossnay ventilation/Bypass ventilation High(Extra high)-Low switching											
Weight		61kg											
Power source		Single phase 220-240V											
Frequency		50Hz						60Hz					
Ventilation mode		Lossnay ventilation			Bypass ventilation			Lossnay ventilation			Bypass ventilation		
Fan speed		Extra high	High	Low	Extra high	High	Low	Extra high	High	Low	Extra high	High	Low
Current	(A)	1.70-1.70	1.60-1.60	1.40-1.40	1.70-1.70	1.60-1.60	1.40-1.40	2.10-2.20	1.90-2.00	1.50-1.60	2.10-2.10	1.90-2.00	1.50-1.60
Power consumption	(W)	365-385	340-370	290-315	350-380	335-360	290-315	455-510	405-465	315-375	455-500	410-460	325-375
Air volume	(m^3/h)	800	800	670	800	800	670	800	800	660	800	800	660
	(L/s)	222	222	186	222	222	186	222	222	183	222	222	183
External static pressure	(mmH_2O)	14.3	10.2	7.1	14.3	10.2	7.1	23.5	12.2	8.2	23.5	12.2	8.2
	(Pa)	140	100	70	140	100	70	230	120	80	230	120	80
Temperature exchange efficiency	(%)	78	78	80.5	–	–	–	78	78	81	–	–	–
Enthalpy exchange efficiency (%)	Heating	71	71	73.5	–	–	–	71	71	74	–	–	–
	Cooling	67	67	70.5	–	–	–	67	67	71	–	–	–
Noise (dB)	Measured at 1.5m under the center of panel	33.5-34.5	32-33	30-31	34.5-35.5	33-34	30.5-31.5	35-36	31-32.5	29-30.5	36-37	32-33.5	29.5-31
	Air outlets	44.5-45.5	43-44	40-41	45.5-46.5	44-45	40.5-41.5	46-47	42-43.5	39-40.5	47-48	43-44.5	39.5-41
Starting current		Under 3.6A less						Under 3.3A less					
Insulation resistance		10MΩ or more(500V megger)											
Dielectric strength		AC 1500V 1 minute											

MODEL		LGH-100RX4-E											
Heat exchange system		Air-to-air total heat exchange(sensible heat + latent heat)exchange											
Heat exchange element material		Partition・spacing plate-special treated paper											
Cladding		Galvanized steel sheet											
Heat insulating material		Self-extinguishing urethane foam											
Motor		Totally enclosed capacitor permanent split-phase induction motor.4 poles,2 units											
Blower		245mm dia. Centrifugal fan											
Filter material		Non-woven fabrics filter(Gravitational method 82%)											
Operation enviroment(Supply air)		-10℃ to 40℃,RH 80% or less											
Operation and room air temperature		OA temperature shall be -15℃ to +40℃, less than 80%RH, with general air conditioning room environment. Subject to outdoor air conditioning unit. Pre-Heat OA in the case of using Lossnay in the cold region less than -15℃.											
Functions		Lossnay ventilation/Bypass ventilation High(Extra high)-Low switching											
Weight		69kg											
Power source		Single phase 220-240V											
Frequency		50Hz						60Hz					
Ventilation mode		Lossnay ventilation			Bypass ventilation			Lossnay ventilation			Bypass ventilation		
Fan speed		Extra high	High	Low	Extra high	High	Low	Extra high	High	Low	Extra high	High	Low
Current	(A)	2.10-2.10	2.00-2.00	1.70-1.70	2.10-2.10	2.00-2.00	1.70-1.70	2.80-2.90	2.60-2.70	2.00-2.10	2.80-2.90	2.60-2.70	2.00-2.10
Power consumption	(W)	455-490	440-475	365-400	455-490	440-475	365-400	615-680	565-635	420-485	615-680	565-635	425-490
Air volume	(m^3/h)	1000	1000	870	1000	1000	870	1000	1000	720	1000	1000	720
	(L/s)	278	278	242	278	278	242	278	278	200	278	278	200
External static pressure	(mmH_2O)	16.3	10.2	8.2	16.3	10.2	8.2	20.4	11.2	6.1	20.4	11.2	6.1
	(Pa)	160	100	80	160	100	80	200	110	60	200	110	60
Temperature exchange efficiency	(%)	79	79	81	–	–	–	79	79	83	–	–	–
Enthalpy exchange efficiency (%)	Heating	71	71	74	–	–	–	71	71	77	–	–	–
	Cooling	67	67	69.5	–	–	–	67	67	73.5	–	–	–
Noise (dB)	Measured at 1.5m under the center of panel	36-37	34-35	31.5-32.5	37-38	35-36.5	33-34	36-38	34-36	30-32	37.5-39.5	35-37.5	31-33
	Air outlets	47-48	45-46	41.5-42.5	48-49	46-47.5	43-44	47-49	45-47	40-42	48.5-50.5	46-48.5	41-43
Starting current		Under 5.4A less						Under 4.9A less					
Insulation resistance		10MΩ or more(500V megger)											
Dielectric strength		AC 1500V 1 minute											

MODEL		LGH-150RX4-E											
Heat exchange system		Air-to-air total heat exchange(sensible heat + latent heat)exchange											
Heat exchange element material		Partition・spacing plate-special treated paper											
Cladding		Galvanized steel sheet											
Heat insulating material		Self-extinguishing urethane foam											
Motor		Totally enclosed capacitor permanent split-phase induction motor.4 poles,4 units											
Blower		245mm dia. Centrifugal fan											
Filter material		Non-woven fabrics filter(Gravitational method 82%)											
Operation enviroment(Supply air)		-10℃ to 40℃,RH 80% or less											
Operation and room air temperature		OA temperature shall be -15℃ to +40℃, less than 80%RH, with general air conditioning room environment. Subject to outdoor air conditioning unit. Pre-Heat OA in the case of using Lossnay in the cold region less than -15℃.											
Functions		Lossnay ventilation/Bypass ventilation High(Extra high)-Low switching											
Weight		124kg											
Power source		Single phase 220-240V											
Frequency		50Hz						60Hz					
Ventilation mode		Lossnay ventilation			Bypass ventilation			Lossnay ventilation			Bypass ventilation		
Fan speed		Extra high	High	Low	Extra high	High	Low	Extra high	High	Low	Extra high	High	Low
Current	(A)	3.30-3.30	3.10-3.10	2.70-2.70	3.20-3.20	3.00-3.00	2.60-2.60	4.20-4.40	3.80-3.90	3.00-3.10	4.20-4.30	3.70-3.90	3.00-3.10
Power consumption	(W)	720-770	670-730	575-625	700-755	655-710	565-615	920-1020	820-935	650-740	910-1010	810-925	645-740
Air volume	(m^3/h)	1500	1500	1250	1500	1500	1250	1500	1500	1230	1500	1500	1230
	(L/s)	417	417	347	417	417	347	417	417	342	417	417	342
External static pressure	(mmH_2O)	14.3	10.2	7.1	14.3	10.2	7.1	23.5	12.2	8.2	23.5	12.2	8.2
	(Pa)	140	100	70	140	100	70	230	120	80	230	120	80
Temperature exchange efficiency	(%)	79	79	81.5	–	–	–	79	79	81.5	–	–	–
Enthalpy exchange efficiency (%)	Heating	72	72	74.5	–	–	–	72	72	74.5	–	–	–
	Cooling	68	68	72	–	–	–	68	68	72	–	–	–
Noise (dB)	Measured at 1.5m under the center of panel	36.5-37.5	35.5-36.5	32.5-33.5	39-40	37.5-38.5	34.5-36.5	37-38	35-36	33-34	39-41	36.5-38.5	33-35
	Air outlets	49-50	47-48	43.5-44.5	51.5-52.5	49-50	45.5-47.5	49.5-50.5	46.5-47.5	44-45	51.5-53.5	48-50	44-46
Starting current		Under 7.2A less						Under 6.6A less					
Insulation resistance		10MΩ or more(500V megger)											
Dielectric strength		AC 1500V 1 minute											

MODEL		LGH-200RX4-E											
Heat exchange system		Air-to-air total heat exchange(sensible heat + latent heat)exchange											
Heat exchange element material		Partition・spacing plate-special treated paper											
Cladding		Galvanized steel sheet											
Heat insulating material		Self-extinguishing urethane foam											
Motor		Totally enclosed capacitor permanent split-phase induction motor.4 poles,4 units											
Blower		245mm dia. Centrifugal fan											
Filter material		Non-woven fabrics filter(Gravitational method 82%)											
Operation enviroment(Supply air)		-10℃ to 40℃,RH 80% or less											
Operation and room air temperature		OA temperature shall be -15℃ to +40℃, less than 80%RH, with general air conditioning room environment. Subject to outdoor air conditioning unit. Pre-Heat OA in the case of using Lossnay in the cold region less than -15℃.											
Functions		Lossnay ventilation/Bypass ventilation High(Extra high)-Low switching											
Weight		140kg											
Power source		Single phase 220-240V											
Frequency		50Hz						60Hz					
Ventilation mode		Lossnay ventilation			Bypass ventilation			Lossnay ventilation			Bypass ventilation		
Fan speed		Extra high	High	Low	Extra high	High	Low	Extra high	High	Low	Extra high	High	Low
Current	(A)	4.30-4.30	4.20-4.20	3.50-3.50	4.30-4.30	4.20-4.20	3.50-3.50	5.80-5.90	5.30-5.40	4.00-4.10	5.80-5.90	5.30-5.50	4.00-4.20
Power consumption	(W)	945-1010	910-980	755-820	940-1010	915-985	755-825	1265-1410	1155-1295	860-980	1260-1405	1160-1300	860-990
Air volume	(m^3/h)	2000	2000	1650	2000	2000	1650	2000	2000	1440	2000	2000	1440
	(L/s)	556	556	458	556	556	458	556	556	400	556	556	400
External static pressure	(mmH_2O)	15.3	9.2	6.6	15.3	9.2	6.6	19.4	10.2	6.1	19.4	10.2	6.1
	(Pa)	150	90	65	150	90	65	190	100	60	190	100	60
Temperature exchange efficiency	(%)	79	79	81.5	—	—	—	79	79	83	—	—	—
Enthalpy exchange efficiency (%)	Heating	71	71	75	—	—	—	71	71	77	—	—	—
	Cooling	67	67	71	—	—	—	67	67	73.5	—	—	—
Noise(dB)	Measured at 1.5m under the center of panel	39-40	37-38	35-36	39.5-41	38-39.5	36-37	38.5-40.5	36.5-38.5	34-35	39.5-42	37.5-40	34.5-36
	Air outlets	51.5-52.5	48.5-49.5	46-47	52-53.5	49.5-51	47-48	51-52.5	48-50	45-46	52-54.5	49-51.5	45.5-47
Starting current		Under 10.8A less						Under 9.8A less					
Insulation resistance		10MΩ or more(500V megger)											
Dielectric strength		AC 1500V 1 minute											

2. Dimensions

LGH-15RX4-E

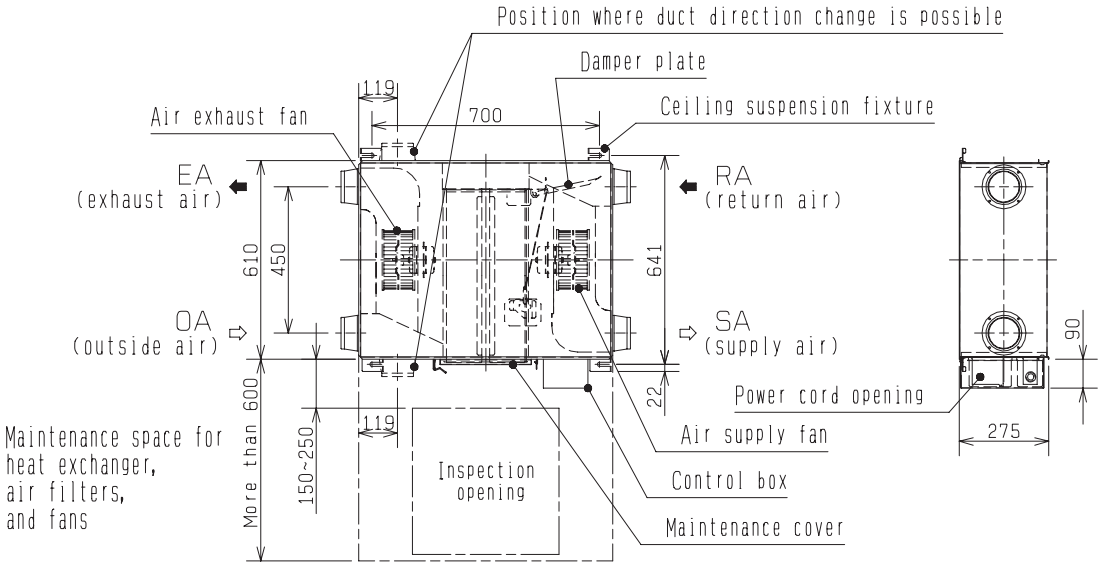

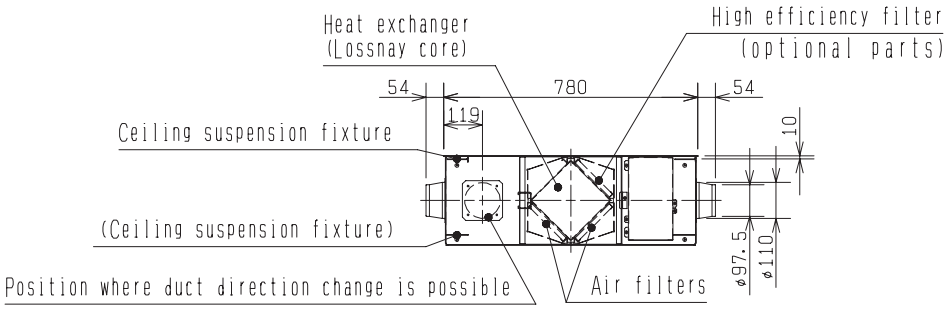

■ Attention

1. If condensation is expected to from, heat up the fresh outside air using a duct heater, etc.
2. An inspection opening (450×450 or 600×600mm) must be installed on the filter and Lossnay core removing side.
3. Provide heat insulation to prevent dew condensation along the two outside ducts. (outside air duct and exhaust air duct)
4. Do a measure for there not to be intrusion of rainwater.
   *Outside air duct and exhaust air duct put equal or more than 1/30 descent inclinations to the side of wall.
   *Where rain falls directly on the machinery, use the weather cover to prevent entry of rainwater.
5. Be sure to connect the grounding wire.

Unit (mm)

LGH-25RX4-E

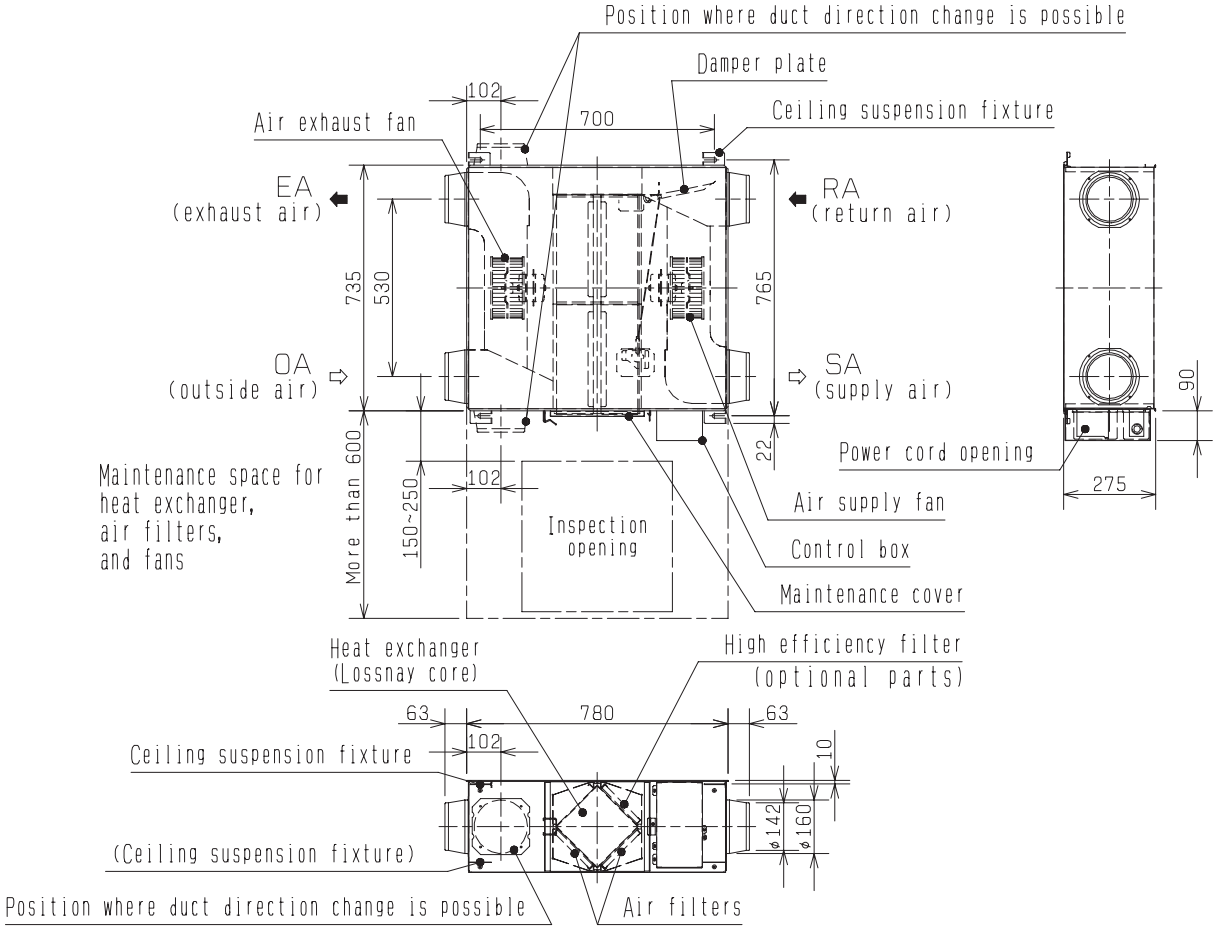

■ Attention

1. If condensation is expected to from, heat up the fresh outside air using a duct heater, etc.
2. An inspection opening (450×450 or 600×600mm) must be installed on the filter and Lossnay core removing side.
3. Provide heat insulation to prevent dew condensation along the two outside ducts. (outside air duct and exhaust air duct)
4. Do a measure for there not to be intrusion of rainwater.
   *Outside air duct and exhaust air duct put equal or more than 1/30 descent inclinations to the side of wall.
   *Where rain falls directly on the machinery, use the weather cover to prevent entry of rainwater.
5. Be sure to connect the grounding wire.

Unit (mm)

LGH-35RX4-E

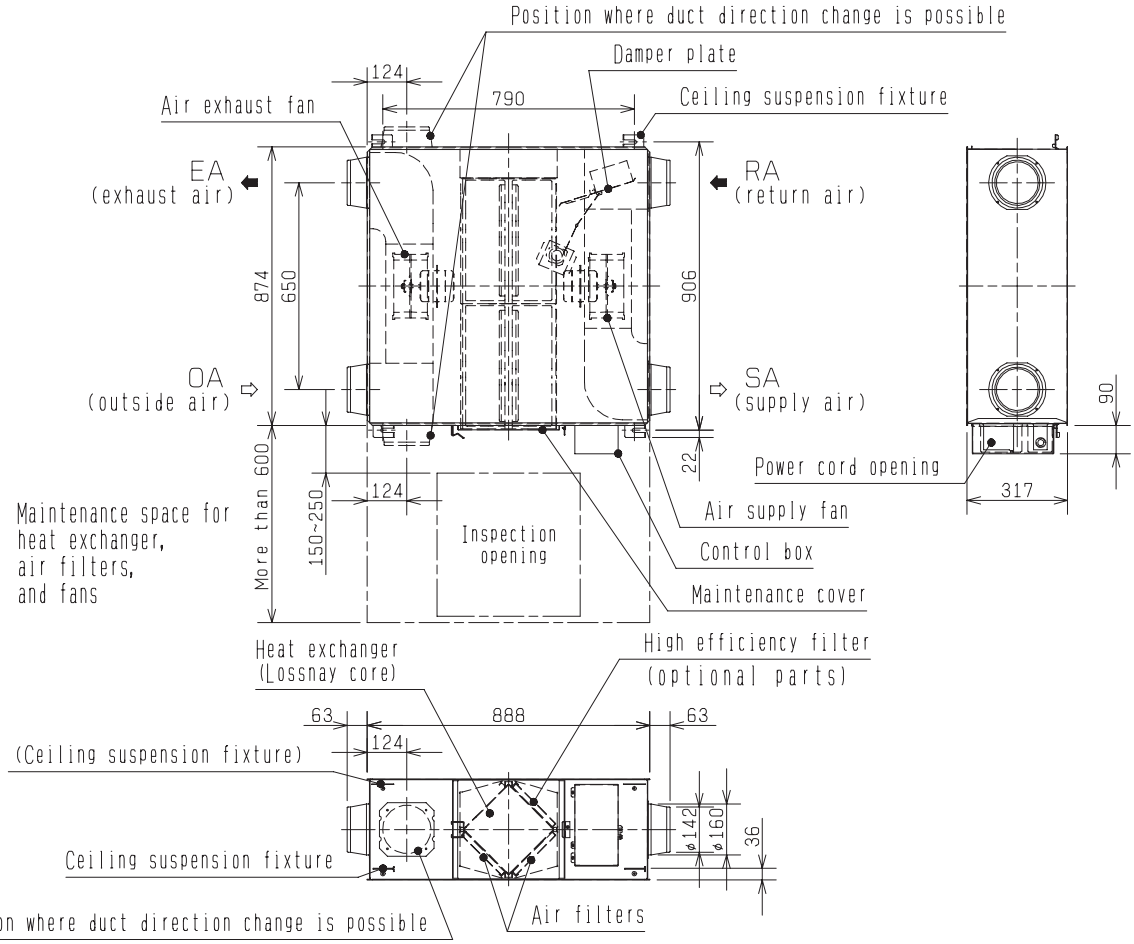

■ Attention

1. If condensation is expected to from, heat up the fresh outside air using a duct heater, etc.
2. An inspection opening (450×450 or 600×600mm) must be installed on the filter and Lossnay core removing side.
3. Provide heat insulation to prevent dew condensation along the two outside ducts. (outside air duct and exhaust air duct)
4. Do a measure for there not to be intrusion of rainwater.
   *Outside air duct and exhaust air duct put equal or more than 1/30 descent inclinations to the side of wall.
   *Where rain falls directly on the machinery, use the weather cover to prevent entry of rainwater.
5. Be sure to connect the grounding wire.

Unit (mm)

LGH-50RX4-E

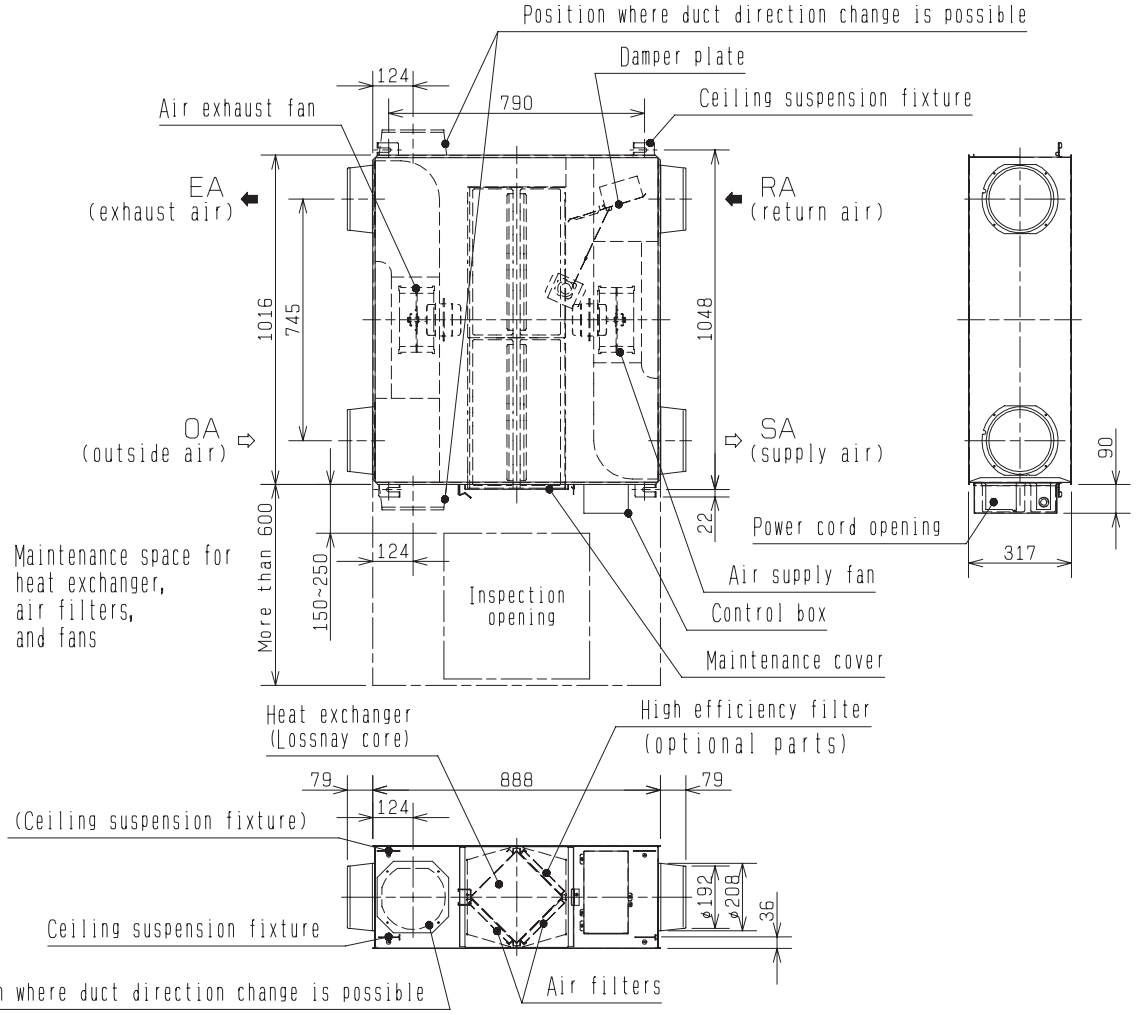

■ Attention

1. If condensation is expected to from, heat up the fresh outside air using a duct heater, etc.
2. An inspection opening (450×450 or 600×600mm) must be installed on the filter and Lossnay core removing side.
3. Provide heat insulation to prevent dew condensation along the two outside ducts. (outside air duct and exhaust air duct)
4. Do a measure for there not to be intrusion of rainwater.
   *Outside air duct and exhaust air duct put equal or more than 1/30 descent inclinations to the side of wall.
   *Where rain falls directly on the machinery, use the weather cover to prevent entry of rainwater.
5. Be sure to connect the grounding wire.

Unit (mm)

LGH-65RX4-E

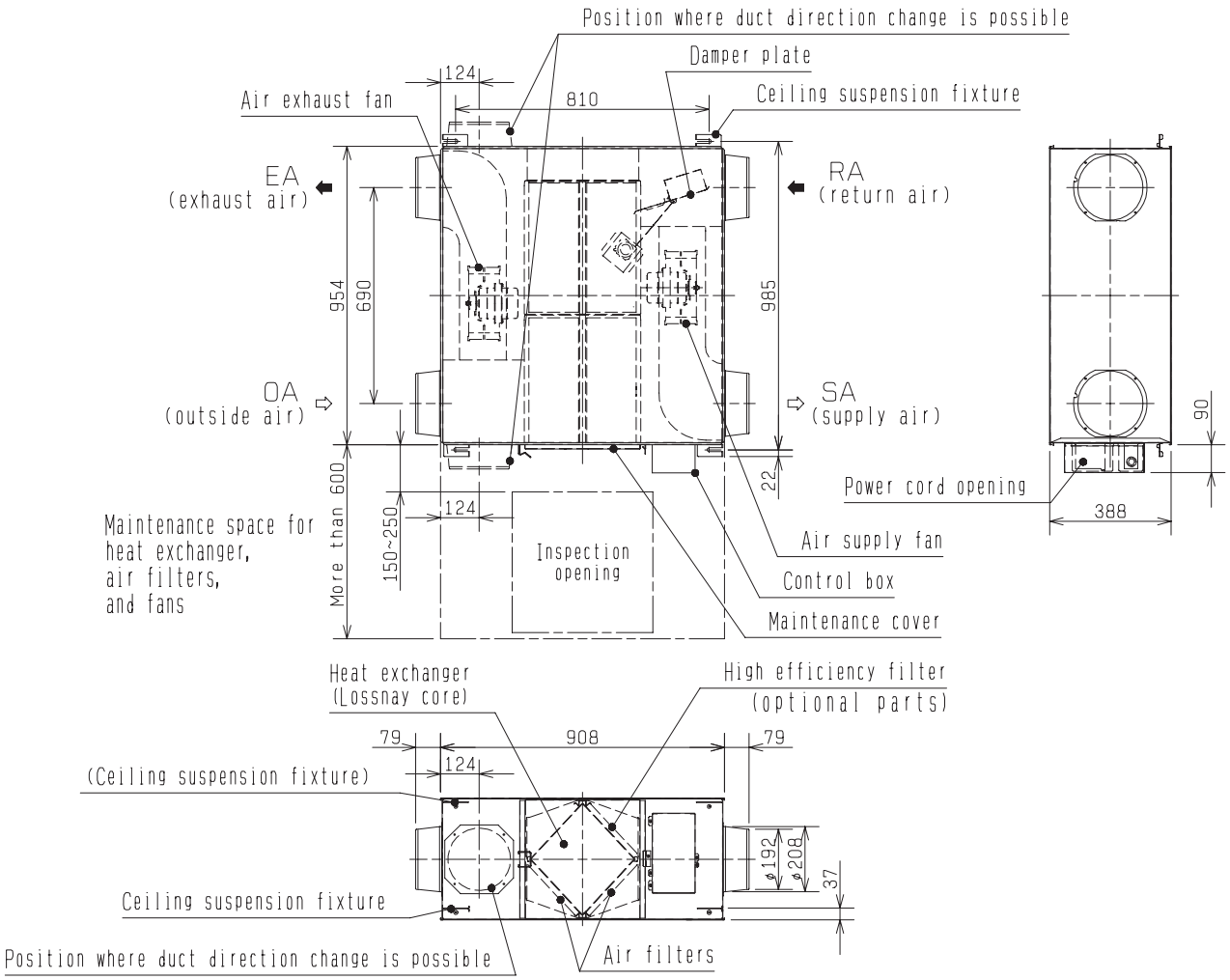

■ Attention

1. If condensation is expected to from, heat up the fresh outside air using a duct heater, etc.
2. An inspection opening (450×450 or 600×600mm) must be installed on the filter and Lossnay core removing side.
3. Provide heat insulation to prevent dew condensation along the two outside ducts. (outside air duct and exhaust air duct)
4. Do a measure for there not to be intrusion of rainwater.
   *Outside air duct and exhaust air duct put equal or more than 1/30 descent inclinations to the side of wall.
   *Where rain falls directly on the machinery, use the weather cover to prevent entry of rainwater.
5. Be sure to connect the grounding wire.

Unit (mm)

LGH-80RX4-E

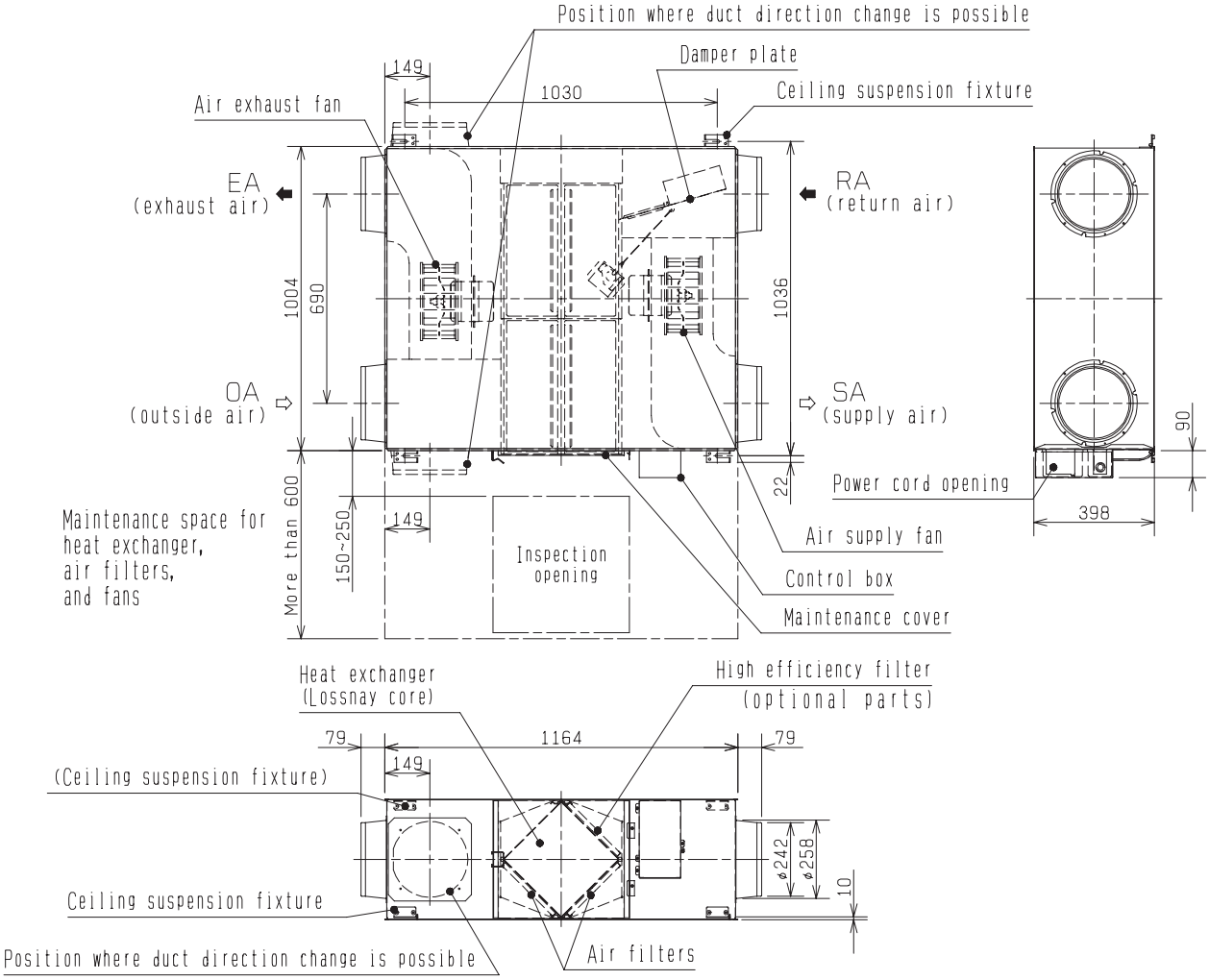

■ Attention

1. If condensation is expected to from, heat up the fresh outside air using a duct heater, etc.
2. An inspection opening (450×450 or 600×600mm) must be installed on the filter and Lossnay core removing side.
3. Provide heat insulation to prevent dew condensation along the two outside ducts. (outside air duct and exhaust air duct)
4. Do a measure for there not to be intrusion of rainwater.
   *Outside air duct and exhaust air duct put equal or more than 1/30 descent inclinations to the side of wall.
   *Where rain falls directly on the machinery, use the weather cover to prevent entry of rainwater.
5. Be sure to connect the grounding wire.

Unit (mm)

LGH-100RX4-E

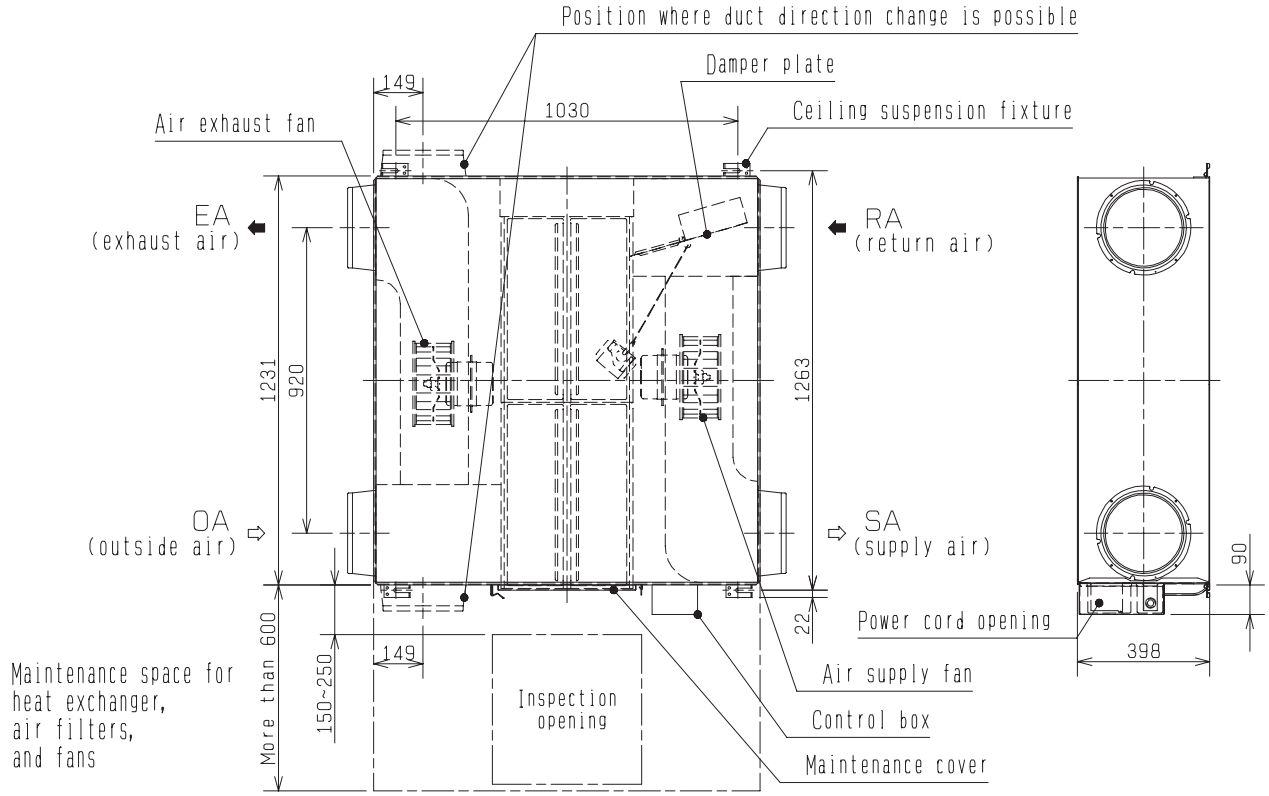

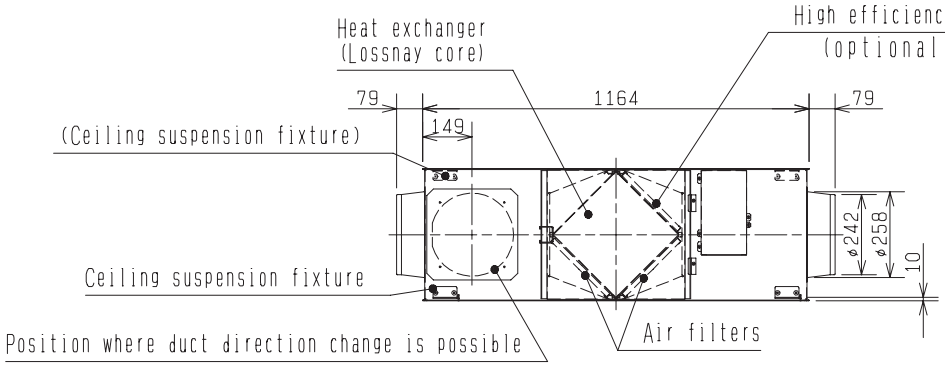

■ Attention

1. If condensation is expected to from, heat up the fresh outside air using a duct heater, etc.
2. An inspection opening (450×450 or 600×600mm) must be installed on the filter and Lossnay core removing side.
3. Provide heat insulation to prevent dew condensation along the two outside ducts. (outside air duct and exhaust air duct)
4. Do a measure for there not to be intrusion of rainwater.
   *Outside air duct and exhaust air duct put equal or more than 1/30 descent inclinations to the side of wall.
   *Where rain falls directly on the machinery, use the weather cover to prevent entry of rainwater.
5. Be sure to connect the grounding wire.

Unit (mm)

LGH-150RX4-E

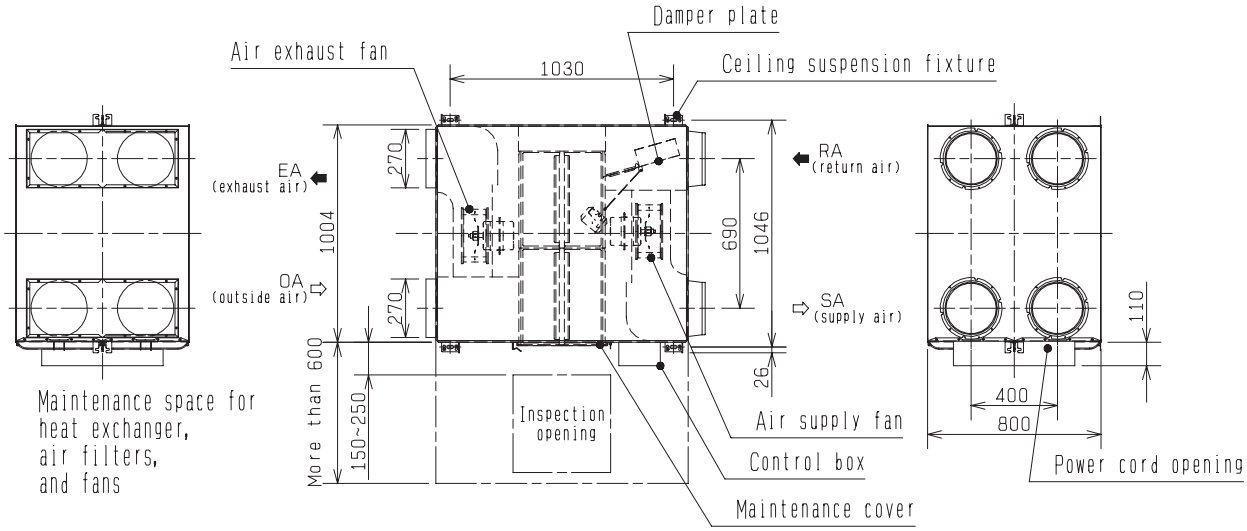

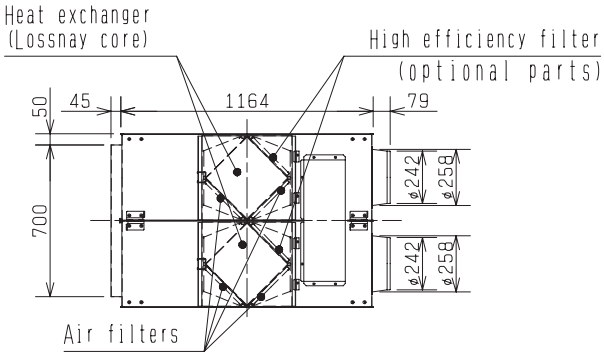

■ Attention

1. If condensation is expected to from, heat up the fresh outside air using a duct heater, etc.
2. An inspection opening (450×450 or 600×600mm) must be installed on the filter and Lossnay core removing side.
3. Provide heat insulation to prevent dew condensation along the two outside ducts. (outside air duct and exhaust air duct)
4. Do a measure for there not to be intrusion of rainwater.
   *Outside air duct and exhaust air duct put equal or more than 1/30 descent inclinations to the side of wall.
   *Where rain falls directly on the machinery, use the weather cover to prevent entry of rainwater.
5. Be sure to connect the grounding wire.

Unit (mm)

LGH-200RX4-E

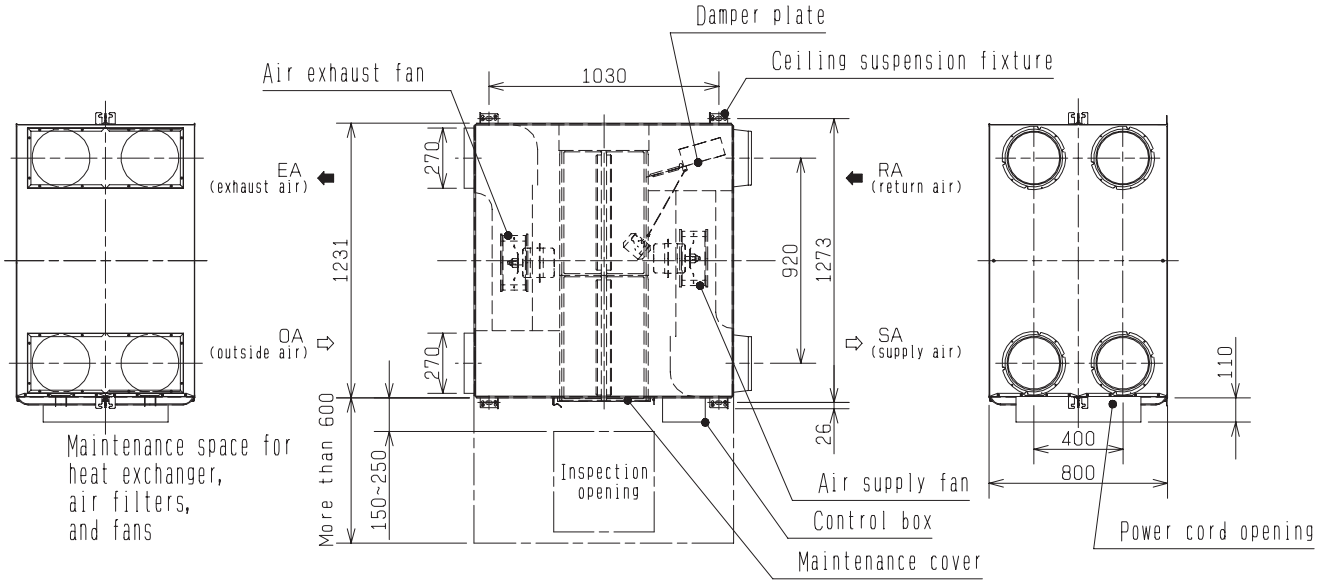

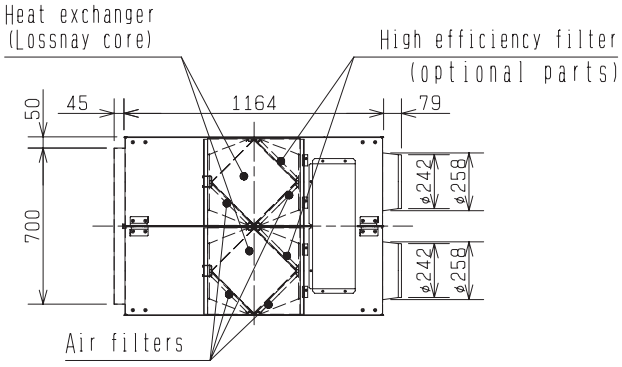

■ Attention

1. If condensation is expected to from, heat up the fresh outside air using a duct heater, etc.
2. An inspection opening (450×450 or 600×600mm) must be installed on the filter and Lossnay core removing side.
3. Provide heat insulation to prevent dew condensation along the two outside ducts. (outside air duct and exhaust air duct)
4. Do a measure for there not to be intrusion of rainwater.
   *Outside air duct and exhaust air duct put equal or more than 1/30 descent inclinations to the side of wall.
   *Where rain falls directly on the machinery, use the weather cover to prevent entry of rainwater.
5. Be sure to connect the grounding wire.

Unit (mm)

3. Wiring diagrams

LGH-15RX4-E,LGH-25RX4-E,LGH-35RX4-E,LGH-50RX4-E,LGH-65RX4-E,LGH-80RX4-E,LGH-100RX4-E

■NOTE 1. TM1, TM2, TM3, TM4, TB5 shown in dotted lines are field work.
2. Breaker should be provided by the customer.
3. Be sure to connect the grounding wire.

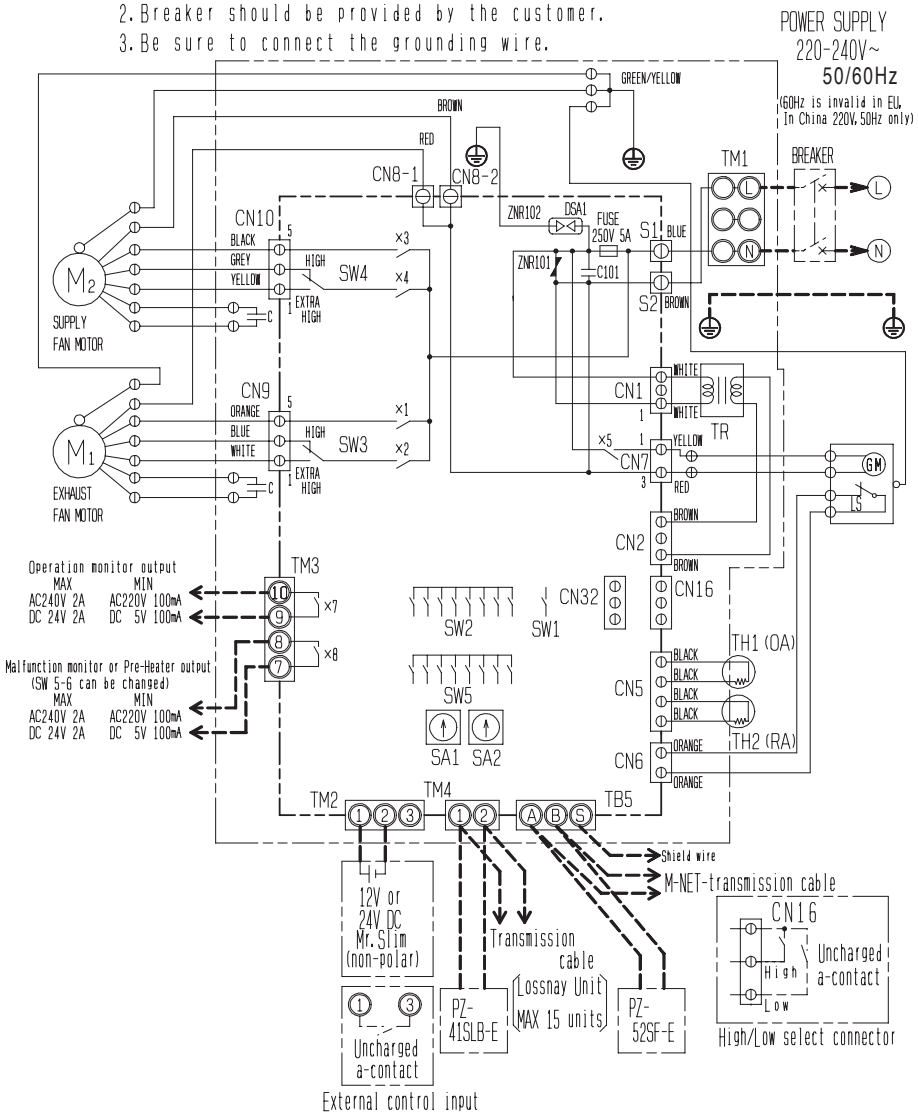

■Symbol explanation

M1 :Motor for exhaust fan
M2 :Motor for supply fan
C :Capacitor
GM :Motor for Bypass movement
LS :Microswitch
TH1:Thermistor for outside air
TH2:Thermistor for return air
SW1:Switch (Main/sub change)
SW2, 5:Switch (Function selection)
SW3:High/E. high select switch (Exhaust fan)
SW4:High/E. high select switch (Supply fan)
TM1:Terminal block (Power supply)
TM2:Terminal block (Transmission cable and external control input)
TM3:Terminal block (Monitor output)
※1TB5:Terminal block (M-NET Transmission cable)
S1, S2:Connector (Power supply)
TR:Control circuit transformer
X7 :Relay contact (For operation monitor output)
X8 :Relay contact (For malfunction monitor output)
CN1:Connector (Transformer primary)
CN2:Connector (Transformer secondary)
CN5:Connector (Thermistor)
CN6:Connector (Microswitch)
CN7:Connector (Motor for Bypass operation)
CN8-1:Tab connector (Fan motor)
CN8-2:Tab connector (Fan motor)
CN9:Connector (Fan motor)
CN10:Connector (Fan motor)
CN16:Connector (High/Low switch)
CN32:Connector (Remote control selection)
※1SA1:Address setting rotary switch (10 digit)
※1SA2:Address setting rotary switch (1 digit)

MARK
◎:Indicates terminal block.
⦶ :Connector.
⦶ :Board insertion connector or fastening connector of control board.

※ Attention
1. This must be used with Mitsubishi Electric Air-Conditioner Network System. (MELANS)
2. External control input (TM2) is impossible to use on the Lossnay addressed to "Sub" (SW1) unit.
3. PZ-41SLB-E and PZ-52SF-E cannot be used simultaneously.

LGH-150RX4-E,LGH-200RX4-E

■NOTE 1. TM1, TM2, TM3, TM4, TB5 shown in dotted lines are field work.
2. Breaker should be provided by the customer.
3. Be sure to connect the grounding wire.

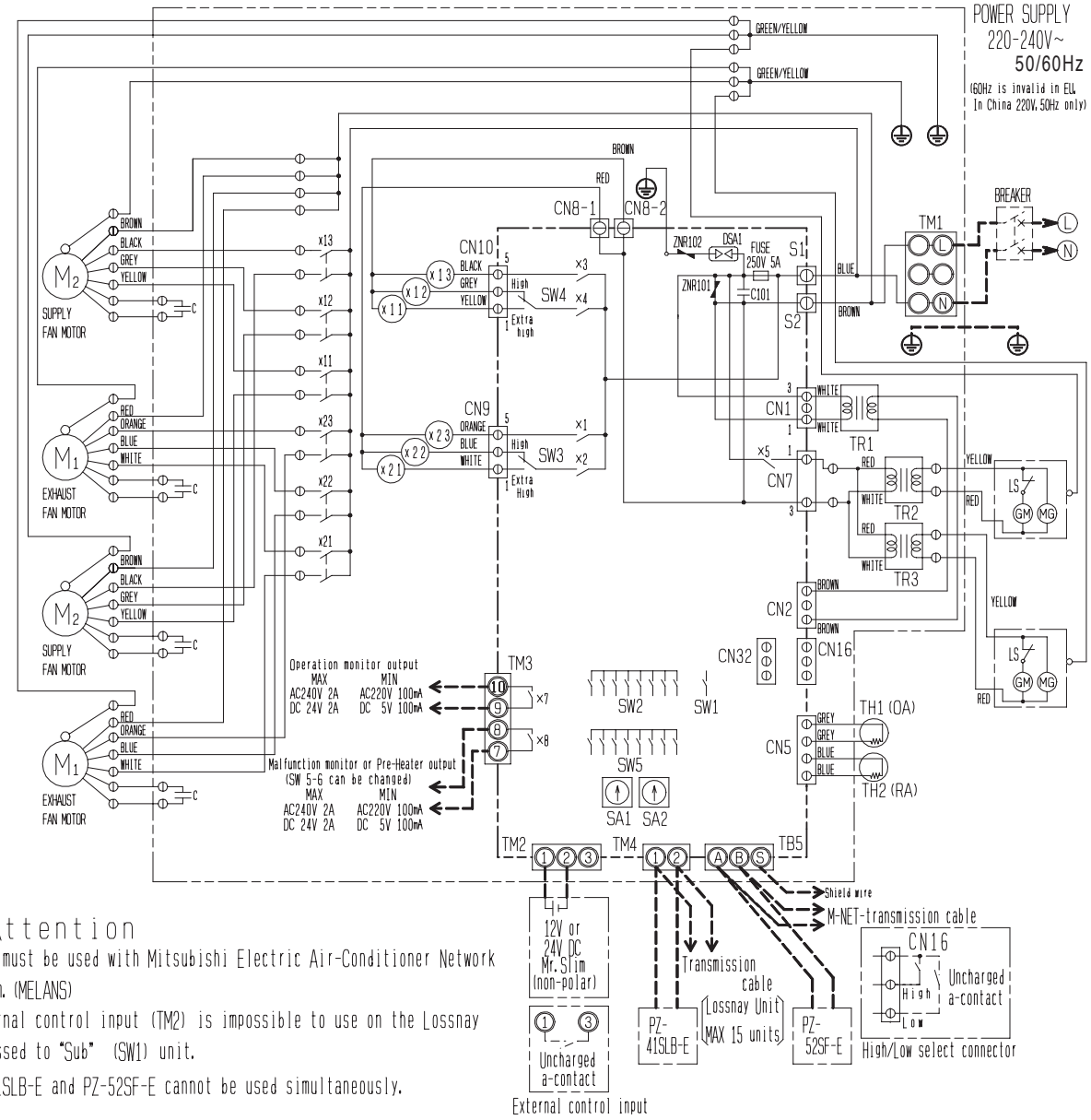

※ Attention

1. This must be used with Mitsubishi Electric Air-Conditioner Network System. (MELANS)
2. External control input (TM2) is impossible to use on the Lossnay addressed to "Sub" (SW1) unit.
3. PZ-41SLB-E and PZ-52SF-E cannot be used simultaneously.

■Symbol explanation

M1 :Motor for exhaust fan
M2 :Motor for supply fan
C :Capacitor
GM :Motor for Bypass movement
LS :Microswitch
TH1:Thermistor for outside air
TH2:Thermistor for return air
SW1:Switch (Main/sub change)
SW2, 5:Switch (Function selection)
SW3:High/E. high select switch (Exhaust fan)
SW4:High/E. high select switch (Supply fan)
TM1:Terminal block (Power supply)
TM2:Terminal block (Transmission cable and external control input)
TM3:Terminal block (Monitor output)
※1TB5:Terminal block (M-NET Transmission cable)
S1, S2:Connector (Power supply)
TR:Control circuit transformer
X7 :Relay contact (For operation monitor output)
X8 :Relay contact (For malfunction monitor output)
CN1:Connector (Transformer primary)
CN2:Connector (Transformer secondary)
CN5:Connector (Thermistor)
CN7:Connector (Motor for Bypass operation)
CN8-1:Tab connector (Fan motor)
CN8-2:Tab connector (Fan motor)
CN9:Connector (Fan motor)
CN10:Connector (Fan motor)
CN16:Connector (High/Low switch)
CN32:Connector (Remote control selection)
※1SA1:Address setting rotary switch (10 digit)
※1SA2:Address setting rotary switch (1 digit)

MARK
◎:Indicates terminal block.
⦶ :Connector.
⦶:Board insertion connector or fastening connector of control board.

4. Troubleshooting

4-1 Service Flow

Confirmation items

① Condition of trouble – remote controller display, etc.
② Frequency of trouble – date of start of operation and occurrence
③ Occurrence timing
④ Existence of drawings, equipment (including controllers and equipment sold separately), cables, wiring, and settings.

Applicable models
Lossnay
LGH-15 to 200RX4-E

Remote controller
PZ-41SLB-E
PZ-52SF-E

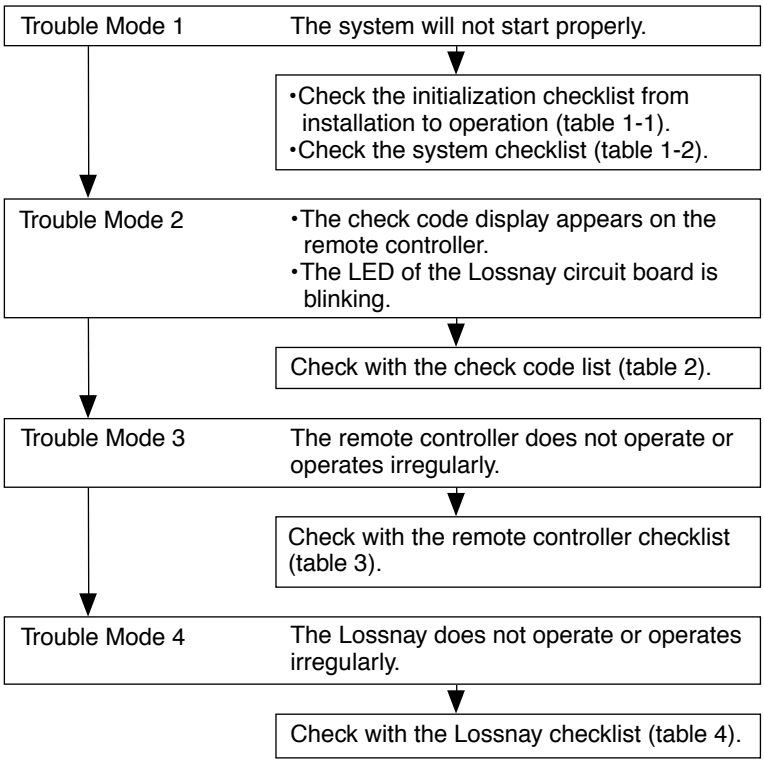

Precautions when diagnosing malfunctions

- When removing a transistor or printed circuit board, make sure the breaker is thrown.
- When removing the circuit board, always hold it at both ends and remove carefully so as not to apply force to the surface mounted parts.
- When removing the circuit board, be careful of the metal edges on the board.
- When removing or inserting the connectors for the circuit board, hold the entire housing section. Never pull on the lead wires.
- When servicing, be sure to recreate the malfunction 2 to 3 times before starting repairs.
- If a malfunction of the printed circuit board is suspected, check for disconnected wires in the print pattern, burnt parts or discoloration.
- If the printed circuit board is replaced, make sure that the switch settings on the new board are the same as the old board.

Error List

Classification	Error item	Measures taken by Lossnay	Remote controller display error code	LED 1 (green) Display (No. of blinks)	LED 2 (red) Display (No. of blinks)	Error monitor output *4)	Cancellation measures			
							Reset power supply	Change address	Stop ↓ Start	Error delete
Unit error	Fan motor operation device error	• Cancellation	4000/4116 *1)	2 times	—	○	○	○	—	○
	Damper motor error	• Cancel damper operation • Other controls as normal	3602 *2)	3 times	—	○	○	○	○	—
	OA temperature sensor error	• Lossnay ventilation fixed (for “Auto” modes) • Other controls as normal	5101	4 times	—	○	○	○	—	○
	RA temperature sensor error	• Lossnay ventilation fixed (for “Auto” modes) • Other controls as normal	5102	5 times	—	○	○	○	—	○
	Pre-heat error	• The Pre-heat output (X8) turns OFF	3126	8 times	—	—	○	○	○	○
	Test operation	• Fan: High speed • Lossnay ventilation fixed	0900	—	—	—	–	–	–	–
Communication error	Dual address	—	6600	—	6 times	○	○	○	○	—
	No ACK	—	6607	—	—	—	○	○	—	○
	No response	—	6608	—	—	—	○	○	—	○
	Controller communication error	• Cancellation	6607/6608	—	8 times	○	○	○	—	○
	Communication circuit error	—	6602/6603/ 6604	—	1 - 5 times	○	○	○	—	○
	Local transmission cable communication error	• Restricted to ON/OFF	6801 *3)	9 times	—	○	○	○	○	○
	Polarity not set	—	—	—	LED 6 turn off	—	○	○	—	○
	PZ-41SLB-E communication error	• Cancellation	6608	9 times	—	○	○	—	—	○

*1) “4000” is displayed on PZ-41SLB-E only.
*2) This error is not generated in the LGH-150RX4, LGH-200RX4 model.
*3) “6801” is displayed on the M-NET controllers only.
*4) Since the error monitor output will turn into the preheat output if SW5-6 is turned ON, it becomes impossible to use it.

4-2 Items to Check

(1)Trouble Mode 1: The system will not start properly.

Initialization checklist from installation to operation (Table 1-1)

After checking the system, check the points below up to operation.

No.	Checkpoint
1	Do the capacity of the main power supply on/off unit and wiring span meet specification?
2	Is the specified power supplied to the Lossnay power terminal (TM1)?
3	Is the wiring length of the transmission cable within specifications? When using PZ-41SLB-E: Overall extension within 500 m When using M-NET: Maximum power supply length within 200 m, maximum distance between ends within 500 m
4	Does the transmission cable meet regulations? (Type, diameter)
5	Is the transmission cable wired at least 5 cm away from the power supply cable?
6	Are multiple transmission or signal cables wired to the same power cable duct?
7	Are multiple transmission cables wired with multi core cables?
8	Is the transmission cable connected to the terminal unit? (PZ-41SLB-E to TM4 ①, ②; M-NET to TB5 Ⓐ, Ⓑ)
9	Is the transmission cable securely connected to the Lossnay terminal unit?
10	When not using M-NET If using 1 Lossnay unit, is the Main/Sub change switch (SW1) on the Lossnay circuit board set to “Main”? If using 2 or more Lossnay units, is the Main/Sub switch set to “Main” on only one unit, and the other units are set to “Sub”?
11	When using M-NET Is the address switch on the Lossnay circuit board (SA1, SA2) set to the correct number?
12	When using external control input Do the specifications of the external signal match specifications of signals that can be input to the Lossnay?
13	When the external input signal is a pulse signal Is the pulse input switch (SW2-2) on the Lossnay circuit board set to ON?
14	When the external signal is 12V DC, 24V DC, or Mr. Slim (A-control or K-control) signal Is it connected to ①, ② on the Lossnay external control input terminal unit (TM2)?
15	When the external signal is an uncharged a-contact signal Is it connected to ①, ③ on the Lossnay external control input terminal unit (TM2)?
16	When M-NET is not being used Is the external input signal connected to the Lossnay set to “Main”?
17	Is the signal cable length within wiring specifications? 12V DC, 24V DC signal: Within limitation of the external device Uncharged a-contact signal: Within 500 m Mr. Slim (A-control or K-control) signal: Within 500 m
18	Is the signal cable wired at least 5 cm away from the power supply cable?
19	Is the output capacity of the Lossnay operation monitor/malfunction monitor (pre-heat output) within specifications? Operation monitor output: Maximum 240V AC/24V DC 2A, minimum 220V AC/5V DC 100 mA Maifunction monitor output/pre-heat output:Maximum 240V AC/24V DC 2A, minimum 220V AC/5V DC100 mA
20	Are the power supply cable, transmission cable, signal cable, etc., securely connected to the proper terminals?
21	Are the settings for the Mai/Sub switch, address switch, and function select switch correct?

No.	Checkpoint
22	When pre-heat output output is used, turn the SW5-6 ON. There is no method of turning ON the pre-heat output without changing OA temperature. The first check of the installation (1) Make the power supply of the heater turned off. (2) Short-circuit the pre-heater output with a lead etc. (3) Check weather the relay contact by the side of the heate rturns on. The pre-heat output is never closed even if abnormalities, such as drawing out the OA/RA thermistor connector, occur.

System checklist

①Use this checklist when using a PZ-41SLB-E or an external device (Table 1-2-1)

No.	Symptom	Cause	Corrective action
1	Remote controller display does not appear.	◯ Power is not supplied to the Lossnay, or power outside specifications is connected. ◯ When using only 1 Lossnay, the Main/Sub switch (SW1) on the Lossnay circuit board is set to “Sub.” ◯ The overall wiring length of the transmission cable is longer than specifications (longer than 500 m). ◯ The remote controller is connected to TB5 (M-NET transmission cable). ◯ PZ-52SF-E is connected to the Lossnay local remote controller.	◯ Check the power supply to the Lossnay. ◯ Set the Main/Sub (SW1) switch to “Main.” ◯ Check the length of the transmission cable wiring. ◯ Connect the transmission cable to TM4 ① ②. ◯ Change to the PZ-41SLB-E remote controller.
2	Remote controller does not operate (Communication error display)	◯ When using multiple Lossnay units, the Main/Sub switch (SW1) on the Lossnay circuit board of the second or following unit is set to “Main.” ◯ The overall wiring length of the transmission cable is longer than specifications (longer than 500 m). ◯ Multiple transmission cables are wired with multi core cables.	◯ Set the Main/Sub switch (SW1) of the second and following Lossnay units to “Sub.” ◯ Check the length of the transmission cable wiring. ◯ For the applied transmission cable, wire the transmission cables away from the other transmission cable.
3	Interlocked operation with external device does not occur.	◯ The type of external signal does not match the connected terminal unit (charged, uncharged, Mr. Slim signal). ◯ The type of external signal does not match the pulse input switch (SW2-2) setting (level signal, pulse signal). ◯ The external device signal is not being input. ◯ The external device and signal cable wiring is longer than specifications (12V DC, 24V DC: Longer than limitations of external device Uncharged a-contact: Longer than 500 m Mr. Slim signal: Longer than 500 m) ◯ The Delayed Start mode is set at the remote controller (PZ-41SLB-E). ◯ The ON Interlocked Operation mode or OFF Interlocked Operation mode is set at the remote controller (PZ-41SLB-E). ◯ When using multiple Lossnay units, the external control input signal is connected to a unit with the “Sub” setting made.	◯ Check the connection to the external control input terminal (TM2) for the type of external signal. ◯ Check the type of external signal and the setting of the pulse input switch (SW2-2). ◯ Check the external device. ◯ Check the length of the signal cable wiring. ◯ Check the Delayed Start mode setting at the remote controller (PZ-41SLB-E). ◯ Check the Interlocked Operation mode setting at the remote controller (PZ-41SLB-E). ◯ Connect the external control input signal to the Lossnay unit set to “Main.”

No.	Symptom	Cause	Corrective action
4	Pre-heat control does not work.	◯ SW5-6 is OFF. ◯ OA temprature is larger than -5˚C.	◯ Turn the SW5-6 ON. ◯ Operate onry below -5˚C.

②System checklist when using the M-NET (Table 1-2-2)

No.	Symptom	Cause	Corrective action
1	Does not interlock with City Multi. (The Lossnay cannot be operated by the ventilation switch on the ME remote controller, MA remote controller, or MELANS.)	◯ The Lossnay is not set for interlocked operation, or is set for interlocked operation at the wrong address. ◯ The length of the M-NET transmission cable wiring from the outdoor unit or the system's overall wiring length is longer than specifications. (Longer than 200 m from the outdoor unit, longer than 500 m between ends.) ◯ PZ-41LSB-E is connected to the Lossnay local remote controller.	◯ Check the Lossnay address, and set for an address corresponding to interlocked operation. ◯ Check the length of the transmission cable wiring. ◯ Change to the PZ-52SF-E remote controller (PZ-41SLB-E can not be used with the M-NET).
2	Cannot operate using the MELANS or Lossnay remote controller.	◯ The address that has been set for the group in MELANS and the address for the Lossnay are different. ◯ The length of the M-NET transmission cable wiring from the power supply unit or the system's overall wiring length is longer than specifications. (Longer than 200 m from the power supply unit, longer than 500 m between ends.) ◯ PZ-41LSB-E is connected to the Lossnay local remote controller.	◯ Check the registered address in MELANS. ◯ Check the length of the transmission cable wiring. ◯ Change to the PZ-52SF-E remote controller (PZ-41SLB-E can not be used with a M-NET system).
3	A unit should operate independently by MELANS or the Lossnay remote controller, but it interlocks with another City Multi unit.	◯ It has been set for interlocked operation with the City Multi unit.	◯ Cancel the interlocked operation setting.
4	Cannot perform group settings for the Lossnay using MELANS, ME remote controller, or MA remote controller. (The remote controller shows "88" at the time of registration.)	◯ Power is not supplied to the Lossnay, or power outside specifications is connected. ◯ The M-NET transmission cable is connected to TM4 ① ②. ◯ The transmission cable is not properly connected to the MELANS or the City Multi. ◯ The length of the transmission cable wiring is longer than specifications (longer than maximum 200 m from the power supply unit, longer than 500 m between ends.)	◯ Check the power for the Lossnay and perform the registration again. ◯ Connect the transmission cable to TB5 Ⓐ,Ⓑ. ◯ Check the transmission cable connection. ◯ Check the length of the transmission cable wiring.
5	When power is supplied to the system, the Lossnay remote controller continues to display "HO" and does not start. (Group registration information disappears.)	◯ The Group setting was made on a Lossnay remote controller in a system connected to a system controller. ◯ The length of the transmission cable wiring is longer than specifications (longer than maximum 200 m from the power supply unit, longer than 500 m between ends.)	◯ In a system connected to MELANS, make the group setting with the MELANS (Do not make the group setting with the Lossnay remote controller). ◯ Check the length of the transmission cable wiring.

No.	Symptom	Cause	Corrective action
6	When power is supplied to the system, the remote control display goes blank and the system does not start.	◯ Over the number of units that can be controlled with the Lossnay remote controller. ◯ The length of the transmission cable wiring is longer than specifications (longer than maximum 200 m from the power supply unit, longer than 500 m between ends.)	◯ Check remote control unit number limitations when using a power supply unit. ◯ Check the length of the transmission cable wiring.
7	The power display "◉" does not display when power is supplied to the system.	① When using City Multi and Lossnay interlocked system (connected to the indoor unit system) ◯ The transmission cable is not correctly connected to the Lossnay remote controller. ◯ The power is not turned on for the outdoor unit. ◯ The length of wiring for the outdoor unit's M-NET transmission cable is longer than specification (longer than 200 m).	◯ Check the transmission cable connection. ◯ Check the power to the outdoor unit. ◯ Check the length of the transmission cable wiring.
		② When using a Lossnay individual system or City Multi and Lossnay interlocked system connected to the central system. ◯ The power supply unit is not connected to the transmission cable. ◯ The power to the power supply unit is not turned on. ◯ The length of wiring of the M-NET transmission cable from the power supply unit is longer than specification (longer than 200 m).	◯ Connect to the power supply unit. ◯ Check the power to the power supply unit. ◯ Check the length of the transmission cable wiring.
8	The "HO" on the remote controller continues to flash when the power is supplied to the system.	◯ Lossnay is Not supplied with specified power. ◯ The address for the Lossnay remote controller does not have a group setting at the MELANS. ◯ The M-NET transmission cable is connected to TM2 ⑤ ⑥. ◯ For a Lossnay individual system with no MELANS, Lossnay registration has not been performed by the Lossnay remote controller.	◯ Check the power to the Lossnay. ◯ Check the Lossnay remote controller address registration with the MELANS ("HO displays for 3 – 10 minute when electricity is supplied to the system). ◯ Connect the transmission cable to TB5 Ⓐ, Ⓑ. ◯ Check the Lossnay registration with the Lossnay remote controller.
9	"LC 6608" displays on the remote controller and the Lossnay does not operate.	◯ The remote controller is PZ-41LSB-E and connected to the TB5 Ⓐ, Ⓑ.	◯ Change to the PZ-52SF-E remote controller (PZ-41SLB-E can not be used with a M-NET system).
10	The operation specified by the system controller differs from the operation of the Lossnay.	◯ The remote controller is PZ-41SLB-E and connected to the TM4 ①-②.	◯ Change to the PZ-52SF-E remote controller (PZ-41SLB-E can not be used with a M-NET system).

(2)Trouble Mode 2

●An error code displays on the remote controller.

●Lossnay circuit board LED is flashing or lit up.

An error code displayed on the remote controller (PZ-41SLB-E, PZ-52SF-E) or the M-NET controller and blinking or illumination of LED1 (green) or LED2 (red) on the circuit board shows the type of error. The LED blink interval is 0.25 seconds for both on and off. The display duration is approximately 5 seconds.

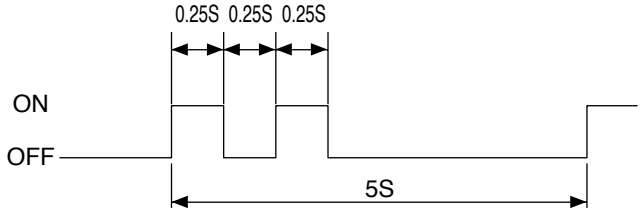

Error display example: Fan motor operation device error

①Checklist of error codes displayed on the PZ-41SLB-E and LED displays(Table2-1)

Error code *1	LED1 (green)	LED 2 (red)	Symptom	Cause	Corrective action
LC 6608	—	—	Lossnay communication error	◯ When using multiple Lossnay units, the main/sub setting has not been made for the second unit and following units. ◯ Multiple transmission cables have been wired using multi core wires. ◯ Transmission cable and power cable are too close. ◯ Transmission cable is not securely connected. ◯ The length of wiring of the transmission cable is longer than specification (longer than 500 m).	◯ Turn off the main power supply and set the Main/Sub switch (SW1) (first unit to main, second and following units to sub). ◯ Wire the transmission cable away from the other transmission cable. ◯ Wire the transmission cable at least 5 cm away from the power supply cable. ◯ Check the transmission cable connection. ◯ Check the length of the transmission cable wiring.
RC6608 SRC 6608	—	—	Communication error between remote controllers (when 2 remote controllers are connected)	◯ Multiple transmission cables have been wired using multi core wires. ◯ Transmission cable and power supply cable are too close. ◯ Transmission cable is not securely connected. ◯ The length of wiring of the transmission cable is longer than specification (longer than 500 m).	◯ Wire the transmission cable away from the other transmission cable. ◯ Wire the transmission cable at least 5 cm away from the power supply cable. ◯ Check the transmission cable connection. ◯ Check the length of the transmission cable wiring.
LC 0900 SLC 0900	—	—	Lossnay trial operation	◯ Trial operation switch on the Lossnay circuit board (SW 2-1 or SW 2-3) is set to ON board.	◯ Check the test operation switch.
LC 4000 SLC 4000	2 blinks	—	Fan motor operation device error	◯ Lossnay fan will not stop.	◯ Replace the table.
LC 3602 SLC 3602	3 blinks	—	Damper related error	◯ Damper board operation is not correct. ◯ Connectors for the damper unit are not correctly connected.	◯ Remove the load and check or move the damper board by hand. ◯ Check the connection of the lead wire's connectors and the circuit connector.
LC 5101 SLC 5101	4 blinks	—	OA thermistor related error	◯ Connectors for the thermistor are not correctly connected.	◯ Check the connection of the lead wires connectors and the circuit connector.
LC 5102 SLC 5102	5 blinks	—	RA thermistor related error	◯ Connectors for the thermistor are not correctly connected.	◯ Check the connection of the lead wires connectors and the circuit connector.

Error code *1	LED1 (green)	LED 2 (red)	Symptom	Cause	Corrective action
——— *2	8 blinks	—	Pre-heat error	◯ In order that the OA temperature might not rise up, intermittent operation started. ◯ After turnig ON the pre-heat output (X8), when the OA temperature becomes larger than 15˚C within 15 minutes. ◯ SW5-6 ON without preheating installation	◯ Check whether the heater power is supplied. Check whether the wiring is correct. If not above-mentioned, the heater capacity is too small. The heater capacity needs to be looked again. ◯ Since the heater capacity is too large, the OA temperature rises up too much. The heater capacity needs to be looked again. ◯ Turn SW5-6 OFF, when no preheating installation.
———	9 blinks	—	Remote controller communication error	◯ Multiple transmission cables have been wired using multi core wires. ◯ Transmission cable and power supply cable are too close. ◯ Transmission cable is not securely connected. ◯ The length of wiring of the transmission cable is longer than specification (longer than 500 m).	◯ Wire the transmission cable away from the other transmission cable. ◯ Wire the transmission cable at least 5 cm away from the power supply cable. ◯ Check the transmission cable connection. ◯ Check the length of the transmission cable wiring.
"Filter" blinking	—	—	Warning to clean air filter by comulative operation time	◯ Interval for cleaning Lossnay air filter has elapsed.	◯ After cleaning the air filter press the "Filter" button on the remote controller 2 times.
"HO" blinking	blinking	—	System is starting	◯ LED1 blinks at 1 second intervals during starting operation (maximum of 45 seconds.)	◯ There is no error.

*1 LC: Lossnay set to Main SLC: Lossnay set to Sub RC, SRC: remote controller (PZ-41SLB-E)
*2 The errror message is NOT displayed for the PZ-41SLB-E Lossnay remote controller.

②Checklist of error codes displayed on the PZ-52SF-E, M-NET controllers, and LED displays(Table2-2)

Error code *1	LED1 (green)	LED 2 (red)	Symptom	Cause	Corrective action
6600	—	6 blinks	Multiple address error	◯ There is another unit with the same address setting.	◯ Check the addresses of devices in the system.
6607 6608	—	8 blinks	No ACK error No answer error (M-NET communication error)	◯ Power supply to Lossnay is not turned on. ◯ Lossnay address was changed. ◯ Multiple transmission cables have been wired using multi core wires. ◯ Transmission cable is not securely connected. ◯ The length of wiring of the transmission cable is longer than specifications (longer than maximum 200 m from the power supply unit, longer than 500 m between ends).	◯ Check the power to the Lossnay. ◯ Check the Lossnay address. ◯ Wire the transmission cable away from the other transmission cable. ◯ Check the transmission cable connection. ◯ Check the length of the transmission cable wiring.
0900	—	—	Lossnay trial operation	◯ Trial operation switch on the Lossnay circuit board (SW 2-1 or SW 2-3) is set to ON.	◯ Check the trial operation switch.
4116	2 blinks	—	Fan motor operation device error	◯ Lossnay fan will not stop.	◯ Replace the table.
3602	3 blinks	—	Damper related error	◯ Damper board operation is not correct. ◯ Connectors for the damper unit are not correctly connected.	◯ Remove the load and check or move the damper board by hand. ◯ Check the connection of the lead wires connectors and the circuit connector.

Error code *1	LED1 (green)	LED 2 (red)	Symptom	Cause	Corrective action
5101	4 blinks	—	OA thermistor related error	◯ Connectors for the thermistor are not correctly connected.	◯ Check the connection of the lead wires connectors and the circuit connector.
5102	5 blinks	—	RA thermistor related error	◯ Connectors for the thermistor are not correctly connected.	◯ Check the connection of the lead wires connectors and the circuit connector.
3126	8 blinks	—	Pre-heat error	◯ In order that the OA temperature might not rise up, intermittent operation started. ◯ After turnig ON the pre-heat output (X8), when the temprature become larger than 15˚C within 15 minutes. ◯ SW5-6 ON without preheating installation	◯ Check whether the heater power is supplied. Check whether the wiring is correct. If not above-mentioned, the heater capacity is too small. The heater capacity needs too be looked again. ◯ Since the heater capacity is too large, the OA temperature rises up too much. The heater capacity needs to be looked again. ◯ Turn SW5-6 OFF, when no preheating installation.
6602 6603 6604	—	1 - 5 blinks	Communication circuit section error	◯ Error with transmission cable. ◯ Controller where error originally occurred is defective. ◯ Lossnay board is defective.	◯ Check transmission cable relations. ◯ Check the controller where the error occurred. ◯ Replace the circuit board.
———	—	Lit	No M-NET connection information	◯ Lossnay does not have Group setting (registration) made.	◯ Check the Lossnay address and confirm that the group setting is made.
Filter blinking	—	—	Warning to clean air filter by comulative operation time	◯ Interval for cleaning Lossnay air filter has elapsed.	◯ After cleaning the air filter press the “Filter” button on the remote controller 2 times.
———	Lit	—	In delayed start operation	◯ Delayed start operation is set at the function select switch (SW 5-1) on the Lossnay circuit board.	◯ There is no error.
———	LED6 (red) off		No power to M-NET transmission cable	◯ Power supply is not supplied to the M-NET transmission cable. ◯ Wiring length of the transmission cable is from the power supply unit or the outdoor unit is longer than specification (maximum extension 200 m).	◯ Check the connection of the power supply unit, outdoor unit and transmission cable. ◯ Check the length of the transmission cable wiring.

*1 The letters “LC” that display with the error code show a Lossnay unit type, and the number in the third column shows the address.

(3)Trouble Mode 3: The remote controller does not operate or operates irregularly.

①Checklist for when using the PZ-41SLB-E (Table 3-1)

No.	Symptom	Cause	Corrective action
1	Nothing displays on the LCD.	◯ Transmission cable is connected to the wrong terminal	◯ Check the transmission cable connection (connected to TM4 on the Lossnay board).
		◯ No Lossnay is set to “Main.”	◯ Turn off the main power supply and set the Main/Sub switch (SW1) (first unit to main, second and following units to sub).
		◯ Power supply to the Lossnay is not turned on.	◯ Check the power supply to the Lossnay.
		◯ Lossnay is connected to a power supply with a rating outside specification.	◯ Check the power supply.
		◯ Transmission cable is not securely connected.	◯ Check the transmission cable connection.
		◯ The length of wiring of the transmission cable is longer than specification (longer than 500 m).	◯ Check the length of the transmission cable wiring.
2	Starts or stops, or the display changes, by itself.	◯ Multiple transmission cables have been wired using multi core wires.	◯ Wire the transmission cable away from the other transmission cable.
		◯ Transmission cable and power supply cable are too close.	◯ Wire the transmission cable at least 5 cm away from the power supply cable.
3	Displays a error code that is not in the check list.	◯ Letters on the remote controller LCD are dim.	◯ Replace the remote control.
		◯ The release of the Delay Start button or the Filter Reset button is not good.	◯ Replace the remote control.
4	Cannot stop the Lossnay with the remote controller (display shows “Interlocked”).	◯ External priority ON/OFF setting is made.	◯ Check the interlocked operation mode setting.
5	Cannot switch fan speed with the remote controller.	◯ High/Low change input (CN16) is ON.	◯ Check the High/Low change input (CN16).
		◯ The function select switch (SW2-4.5) on the Lossnay circuit has the fixed high or fixed low speed set.	◯ Check the function select switch (SW 2-4.5)
6	Lossnay operates when the main power supply turns on and the remote controller displays.	◯ Main power supply was cut during Lossnay operation.	◯ Stop the Lossnay with the remote controller, then wait at least 10 second and turn off the main power supply .

②Checklist for when using PZ-52SF-E (Table 3-2)

No.	Symptom	Cause	Corrective action
1	Nothing displays on the LCD.	◯ Transmission cable is connected to the wrong terminal	◯ Check the transmission cable connection (connected to Ⓐ, Ⓑ of terminal unit TB5 on the Lossnay board).
		◯ There is no power supply unit (for Lossnay only systems).	◯ Install the power supply unit.
		◯ The power supply unit is not turned on.	◯ Check the power to the power supply unit.
		◯ Transmission cable is not securely connected.	◯ Check the transmission cable connection.
		◯ Wiring length of the transmission cable is from the power supply unit or the outdoor unit is longer than specifications (maximum extension 200 m).	◯ Check the length of the transmission cable wiring.

No.	Symptom	Cause	Corrective action
2	Displays “HO” and does not start.	◯ It is less than 10 minutes since the power was supplied to the system.	◯ After supplying power to the system, HO blinks for a maximum of about 10 minutes. (This is not an error.)
		◯ Group setting (registration) has not been made.	◯ Make the group setting (registration). If using a system with a system controller, register at the system controller. If there is only the Lossnay remote controller, register at the remote controller.
		◯ Remote control address has not been registered in the group setting by the system controller.	◯ Check the group setting at the MELANS.
		◯ Power supply to the Lossnay is not turned on.	◯ Check the power supply to the Lossnay.
		◯ Lossnay is connected to a power supply with a rating outside specification.	◯ Check the power supply.
		◯ Lossnay transmission cable connection terminal is wrong.	◯ Check the transmission cable connection (connected to Ⓐ,Ⓑ of terminal unit TB5 on the Lossnay board).
		◯ Lossnay address was changed.	◯ Check the Lossnay address.
		◯ Lossnay board was changed.	◯ If the board has been replaced, reset the group settings.
		◯ The length of wiring of the transmission cable is longer than specifications (longer than maximum 200 m from the power supply unit, longer than 500 m between ends).	◯ Check the length of the transmission cable wiring.
3	Cannot register the Lossnay from the remote controller or the controller.	◯ Power supply to the Lossnay is not turned on.	◯ Check the power supply to the Lossnay.
		◯ Lossnay is connected to a power supply with a rating outside specification.	◯ Check the power supply.
		◯ Transmission cable to the Lossnay is not connected.	◯ Check the transmission cable connection.
		◯ Lossnay transmission cable connection terminal is wrong.	◯ Check the transmission cable connection (connected to Ⓐ, Ⓑ of terminal unit TB5 on the Lossnay table).
		◯ Lossnay address is wrong.	◯ Check the Lossnay address.
		◯ The length of wiring of the transmission cable is longer than specifications (longer than maximum 200 m from the power supply unit, longer than 500 m between ends).	◯ Check the length of the transmission cable wiring.
4	Starts or stops, or the display changes, by itself.	◯ Set for interlocked operation with City Multi.	◯ Cancel interlocked operation setting.
5	Displays a error code that is not in the checklist.	◯ Letters on the remote controller LCD are dim.	◯ Replace the remote controller.
6	Cannot stop the Lossnay with the remote controller (display shows “Central”).	◯ “Cancel Operation” setting is made from the MELANS.	◯ Check the settings of the MELANS.
		◯ External priority ON/OFF setting is made.	◯ Check the interlocked operation mode setting.
		◯ Remote/nearby switch input (CN32) is set to “Remote.”	◯ Check the remote/nearby change input (CN32).

(4)Trouble Mode 4: The Lossnay does not operate or operates irregularly.

①Lossnay checklist (Table 4).

No.	Symptom	Cause	Corrective action
1	The fan does not operate. The fan does not operate normally.	◯ Connectors for the fan connection or connectors for the control circuit section connection are not secure.	◯ Check the lead wire connectors and the control circuit section connectors.
		◯ Power supply is not supplied to the Lossnay, or power outside specifications is connected.	◯ Check the power supply.
		◯ Lossnay group setting is not made by using the M-NET. (LED2 lights)	◯ Check the Lossnay address and the group setting (LED2 lights when not using M-NET. This is no error.)
2	Interlocked operation with external device (air conditioner) does not occur.	◯ The type of external signal does not match the connected terminal unit (charged, uncharged, Mr. Slim signal).	◯ Check the external signal type and the external control input terminal (TM2) connection.
		◯ The type of external signal does not match the pulse input switch (SW2-2) setting (level signal, pulse signal).	◯ Check the external signal type and the pulse input switch (SW2-2) setting.
		◯ The external device signal is not being input.	◯ Check the external device.
		◯ The external device and signal cable wiring is longer than specifications (12V DC, 24V DC: Longer than limitations of external device Uncharged a-contact: Longer than 500 m Mr. Slim signal: Longer than 500 m)	◯ Check the wiring length of the signal cable.
		◯ The Delayed Start mode is set at the remote controller (PZ-41SLB-E) or the function select switch (SW 5-1) on the Lossnay circuit board.	◯ Check the delayed start settings of the remote controller (PZ41SLB-E) and the function select switch (SW5-1).
		◯ The ON Interlocked Operation mode or OFF Interlocked Operation mode is set at the remote controller (PZ-41SLB-E) or the function select switch (SW 5-7,8) on the Lossnay circuit board.	◯ Check the interlocked operation mode settings of the remote controller (PZ41SLB-E) and the function select switch (SW5-7, 8)
		◯ When using multiple Lossnay units, the external control input signal is connected to a unit with the “Sub” setting made.	◯ Connect the external control input signal to the Lossnay set to “Main.”
		◯ In a group of multiple Lossnay units with the M-NET, the external control input signal is connected to a Lossnay unit other than the one with the smallest address.	◯ Connect the external control input signal to the Lossnay in the group with the lowest address.
		◯ There is a communication error with the remote controller or controller.	◯ Check the remote controller or controller.
3	Fan will not stop.	◯ The trial operation switch (SW 2-1) is ON.	◯ Check the test operation switch (SW2-1).
4	Lossnay operates when main power is turned on.	◯ The PZ-41SLB-E is being used.	◯ When the main power supply is turned off while the Lossnay is operating from the remote controller, the Lossnay will resume operation when the main power is turned back on (this is no error).
		◯ By using the M-NET, the power supply ON/OFF setting is set to ON at the function select switch (SW 2-6) on the Lossnay circuit board.	◯ Check the power supply ON/OFF setting of the function select switch (SW2-6).
		◯ By using the M-NET, the automatic recovery following power supply interruption (refer to page 61) setting is made at the function select switch (SW 5-4) on the Lossnay circuit board.	◯ Check the automatic recovery following power supply interruption setting of the function select switch (SW5-4).

No.	Symptom	Cause	Corrective action
5	Supply air fan periodically stops operating.	◯ When the outdoor air temperature is -10°C or less, operation stops after a fixed period of about 10 minutes to keep the Lossnay Core from freezing. (Cold weather area spec) ◯ When connected to a Mr. Slim or a City Multi by a duct, operation stops when the air conditioner is defrosting.	◯ This is no error. ◯ This is no error.
6	Takes in air from outdoors during interlocked operation with a Mr. Slim or a City Multi, but supply air fan doesn't stop operating when defrosting.	◯ The indoor unit's outside air intake selection is invalid.	◯ Set the outdoor air intake selection of a indoor unit to "ON."
7	The supply air fan and exhaust fan both periodically stop operating.	◯ When connected to Mr. Slim or City Multi by a duct and the function select switch (SW 5-3) on the Lossnay circuit board is ON, operation stops when the air conditioner is defrosting.	◯ Check the function select switch (SW5-3).
8	Fan speed will not change.	◯ The High/Low switching extermary input (CN16) is set to ON. ◯ The function select switch (SW2-4.5) on the Lossnay circuit board is set to the high fixed or low fixed fan speed. ◯ The trial operation switch (SW2-1) is turned ON.	◯ Check the High/Low change input (CN16). ◯ Check the function select switch (SW2-4,5). ◯ Check the trial operation switch (SW2-1).
9	Damper board does not operate.	◯ The outside air temperature is less than 8°C. ◯ The damper board operation is defective. ◯ The thermistor related connectors are not securely connected. ◯ The damper related connectors are not securely connected. ◯ The trial operation switch (SW2-1 or SW2-3) is turned ON. ◯ When using the remote controller to change ventilation mode, there may be a delayed start of up to 30 seconds depending on the timing.	◯ Check the outdoor air temperature. ◯ Remove the load and check or move the damper board by hand. ◯ Check the connections of the lead wire connectors and the circuit connectors. ◯ Check the connections of the lead wire connectors and the control circuit connectors. ◯ Check the trial operation switch (SW2-1 or SW2-3). ◯ This is no error.
10	Operation monitor output is late with regard to external control input ON/OFF.	◯ When using the PZ-41SLB-E there is a maximum delay of 7 seconds, or without using there is a maximum delay of 3 seconds.	◯ This is no error.
11	Operation monitor output is OFF during operation.	◯ When the function select switch (SW 5-2) on the Lossnay circuit board is ON, for operation monitor output for interlocked operation with the supply air fan, it turns OFF when the outside air is -10°C or less or when the air conditioner is defrosting.	◯ Check the function select switch (SW5-2)
12	Delayed start operation does not work when Delayed start is set.	◯ When using the PZ-41SLB-E, the circuit function select switch is set for delayed start.	◯ Set delayed start at the remote controller (the circuit board switch is not in effect when using the PZ-41SLB-E).
13	Lossnay does not operate when power is on even when the power on/off setting is made.	◯ Using the PZ-41SLB-E.	◯ The power supply ON/OFF setting is not in effect when using PZ-41SLB-E.
14	Interlocked operation is different from the settings.	◯ When using the PZ-41SLB-E, the circuit function select switch is set for interlocked operation.	◯ Set interlocked operation at the remote controller (the circuit board switch is not in effect when using the PZ-41SLB-E).

②Temperature vs. themistor resistance table

Temperature (°C)	Resistance value (kΩ)	Temperature (°C)	Resistance value (kΩ)	Temperature (°C)	Resistance value (kΩ)	Temperature (°C)	Resistance value (kΩ)	Temperature (°C)	Resistance value (kΩ)
-40	88.85 - ∞	-7	17.92	8	9.57	23	5.38	38	3.17
⋮	⋮	-6	17.16	9	9.20	24	5.19	39	3.06
-20	32.43	-5	16.43	10	8.84	25	5.00	40	2.96
-19	30.92	-4	15.74	11	8.49	26	4.82	41	2.86
-18	29.50	-3	15.08	12	8.17	27	4.65	42	2.77
-17	28.14	-2	14.45	13	7.85	28	4.49	43	2.68
-16	26.87	-1	13.86	14	7.55	29	4.33	44	2.59
-15	25.65	0	13.29	15	7.27	30	4.18	45	2.51
-14	24.51	1	12.74	16	6.99	31	4.03	46	2.43
-13	23.42	2	12.22	17	6.73	32	3.89	47	2.35
-12	22.39	3	11.72	18	6.48	33	3.76	48	2.28
-11	21.41	4	11.25	19	6.24	34	3.63	49	2.21
-10	20.48	5	10.80	20	6.01	35	3.51	50	2.14
-9	19.58	6	10.37	21	5.79	36	3.39	⋮	⋮
-8	18.73	7	9.96	22	5.58	37	3.28	87.5 -	0.72 - 0

4-3 Circuit Test Point

LED1 (green)
- When blinking, there is an error with the Lossnay unit (number of blinks indicates the type of error).
- Blinks at 1 second intervals when starting.
- Lit during delayed start, normally off at other times.

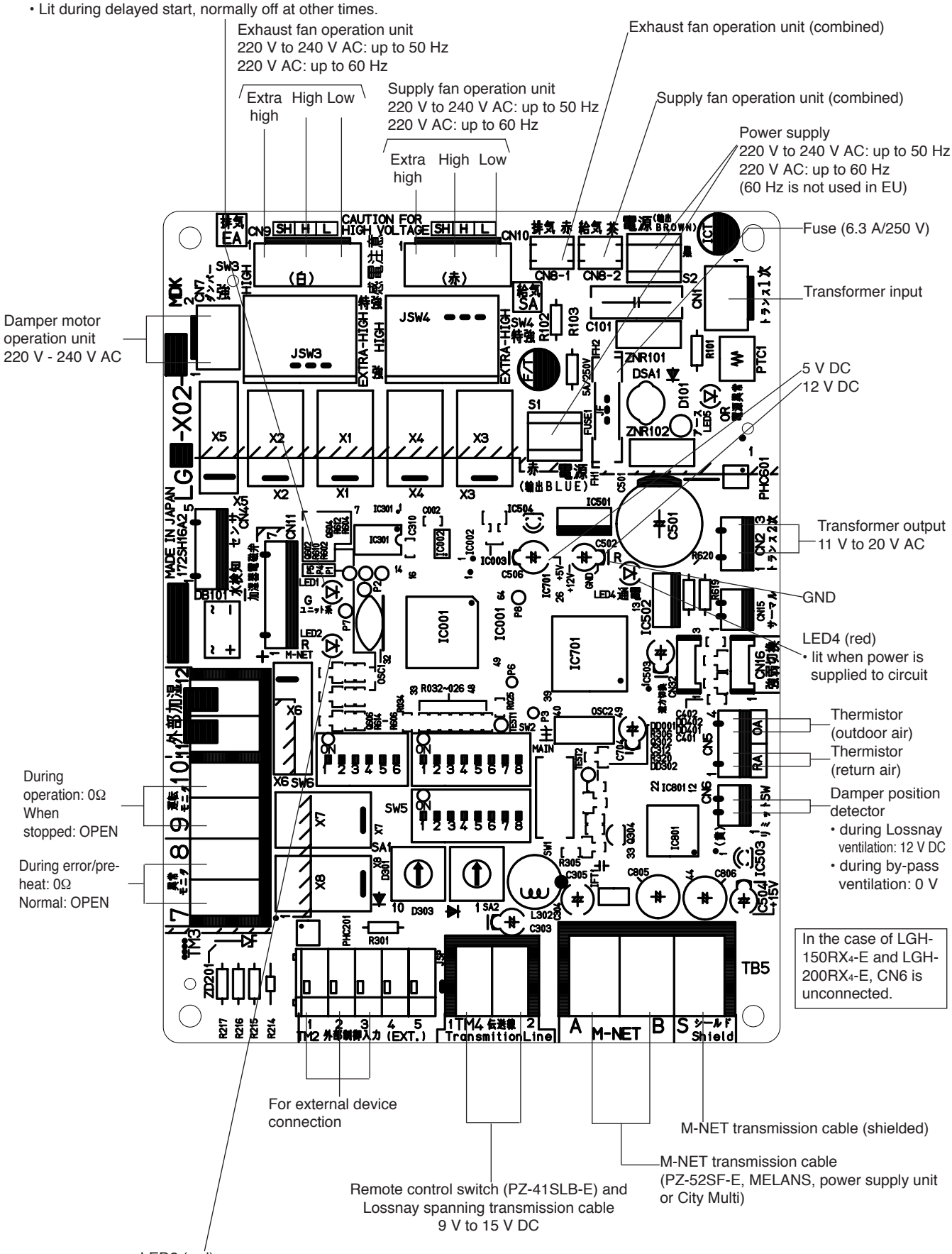

5. Overhaul procedures

5-1 Blower Parts

①Remove the cover fixing screw.
②Pull back the hinged clip.
Open the door and lift off of the hinge brackets.

LGH-15RX4-E~LGH-100RX4-E

LGH-150RX4-E,LGH-200RX4-E

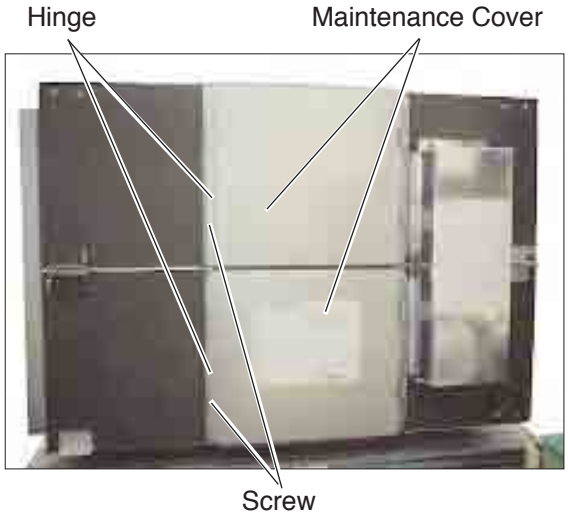

③Remove Filters from the unit.
④Remove Cores from the unit.

LGH-15RX4-E~LGH-100RX4-E

LGH-150RX4-E,LGH-200RX4-E

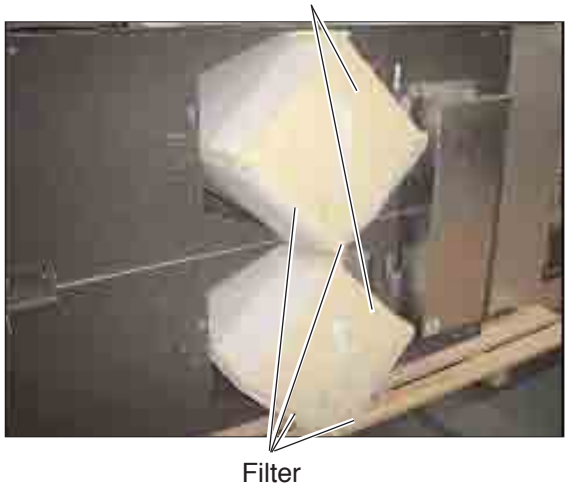

⑤Remove screw from the core-guide,Remove core-guide.

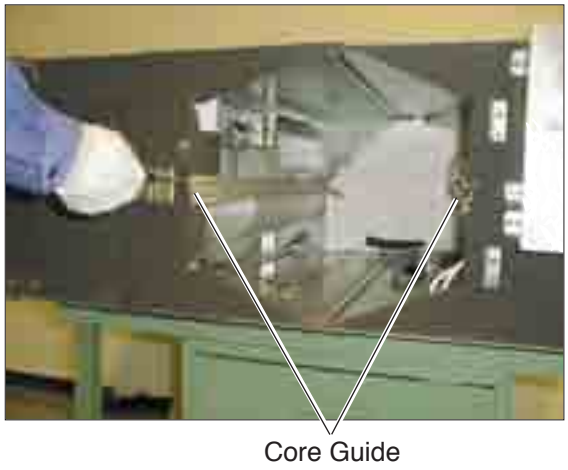

Core Guide

⑥Remove separator from the blower portion.

Separator

⑦Remove screws from the motor base.

⑧Remove the pre-assembled blower.

Pre-assembled Blower

5-2 Damper Movement Motor Part (All units available)

①Remove (2) screws out from the damper motor cover.

Damper Motor Cover

②Take the damper movement motor out of the cover.

Damper Movement Motor

5-3 Circuit Board Part

(1)LGH-15RX4-E~LGH-100RX4-E

①Remove (3) screws from the control cover and open the control cover.

Control Cover

②Remove (2) screws from capacitors.

③Remove all harnesses connected to the circuit board.

④Take the circiuit board out.

(2)LGH-150RX4-E,LGH-200RX4-E

①Remove (2) screws from the control cover and open the control cover.

②Remove all harnesses connected to the circuit board.
③Take the circuit board out.

6. Parts list

Please note the following when using the parts list.

1. When ordering parts, always indicate the part number, part name, and number of parts required.
2. Parts are not always available, and it may take time for you to receive them.
3. There may be specification improvements or prices changes.
4. Specifications and prices are as of March 2006.
5. Parts marked ⚠ are critical for safety. To maintain safety and performance, always replace these parts with the parts prescribed.
6. The numbers that are circled in the exploded view are the same as the reference number for the part being indicated.

Description of screw abbreviations

◯◯◯ Screw ④ × ⑯

Screw diameter Length

Abbreviation	Description
PC screw	Cross recess flat head machine screw
PRC screw	Cross recess oval head machine screw
PP screw	Cross recess pan head machine screw
SW · PP screw	Cross recess pan head screw with spring washer
PPT screw	Cross recess tapping screw
PCT screw	Cross recess flat head tapping screw
PTT screw	Cross recess truss head tapping screw
PT screw	Cross recess truss head machine screw
SET screw	Slotted head stop screw
SQ · SET screw	Square head stop screw
P · SET screw	Pan head stop screw
PMT screw	Primer truss head screw
HS · SET screw	Hexagon head stop screw
P · R · W screw	Cross recess round wood screw
P · C · W screw	Cross recess flat head wood screw
P · R · C · W screw	Cross recess round and flat wood screw
R · W screw	Slotted round wood screw
PW · PP screw	Cross recess pan head screw with small washer
SW-PW · PP screw	Cross recess pan head machine screw with spring washer and flat washer

Model LGH-15RX4-E

No.	Parts No.	Name of part	Q'ty pcs/unit	Critical for safety	Remarks	Price
1.	H00 000 487	PTT screw 4×8	18			
2.	K82 163 617	Flange	2			
3.	R50 476 380	Hanger	4			
4.	H00 189 007	PTT screw 5×10	4			
5.	Y50 075 707	Maintenance cover	1			
6.	R50 395 381	Core guide	1			
7.	Y50 061 717	Filter	2	⚠		
8.	R50 476 710	Lossnay core	1	⚠		
9.	R50 476 381	Core guide	1			
10.	R50 384 712	Cover	2			
11.	R50 466 344	Hinge	1			
12.	M34 074 017	Special screw 4×11	1			
13.	Y50 029 712	Fix plate	1			
14.	Y50 061 704	Hanger cover	4			
15.	R50 483 704	Lead support	1			
16.	R50 361 717	Sound absorbing material	1	⚠	SA	
17.	R50 384 617	Flange	2			

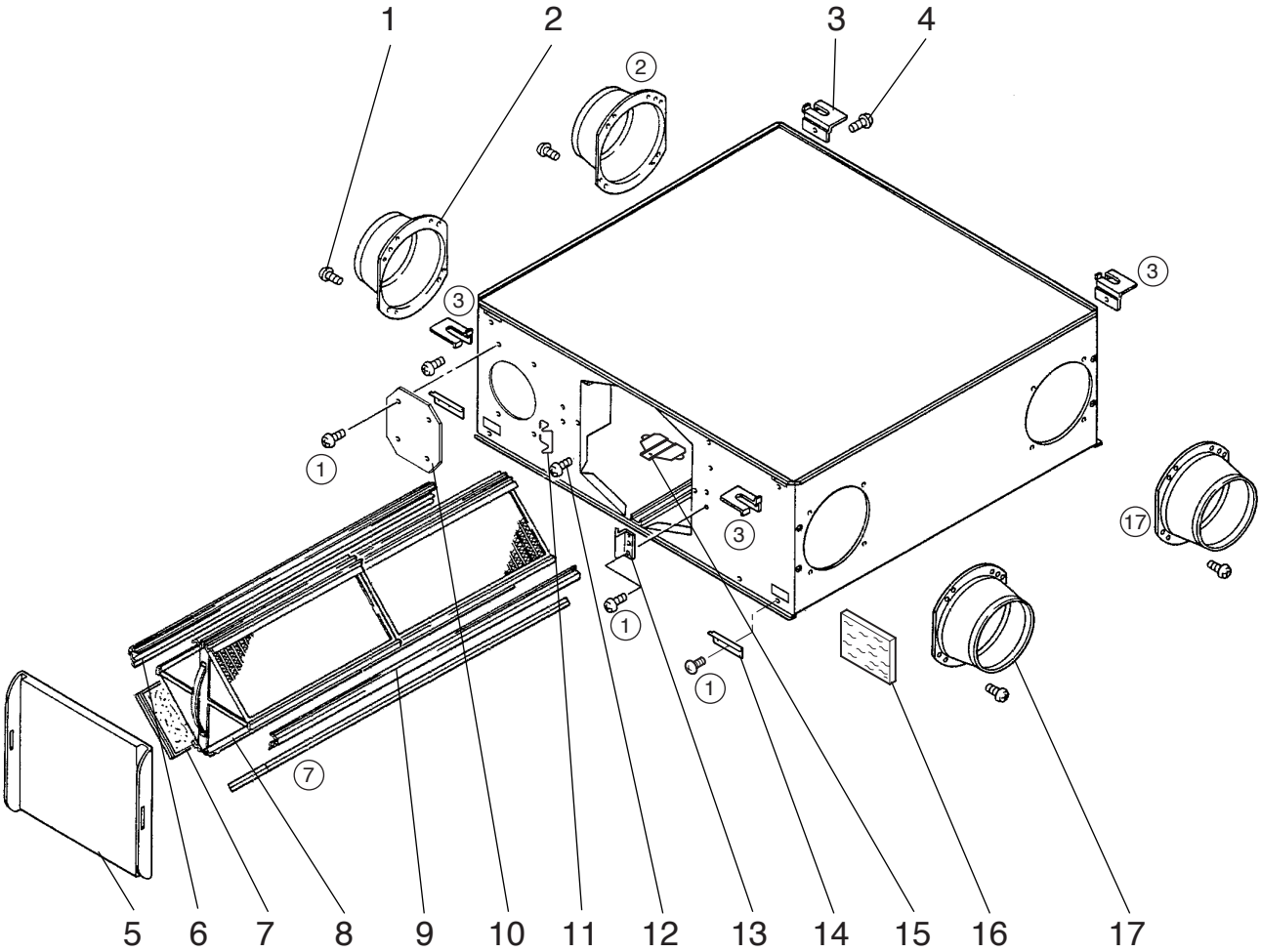

Model LGH-15RX4-E

No.	Parts No.	Name of part	Q'ty pcs/unit	Critical for safety	Remarks	Price
31.	R50 331 067	Special nut	2			
32.	M34 398 077	Tab washer	2			
33.	R50 354 480	Centrifugal fan	2	⚠	φ180	
34.	R50 028 465	Special washer	2			
35.	Y50 116 451	Motor	2	⚠		
36.	H00 312 007	PTT screw 4×6	22			
37.	R50 214 708	Motor plate	4			
38.	H00 000 332	PTT screw 4×10	12			
39.	Y50 029 708	Motor base	2			

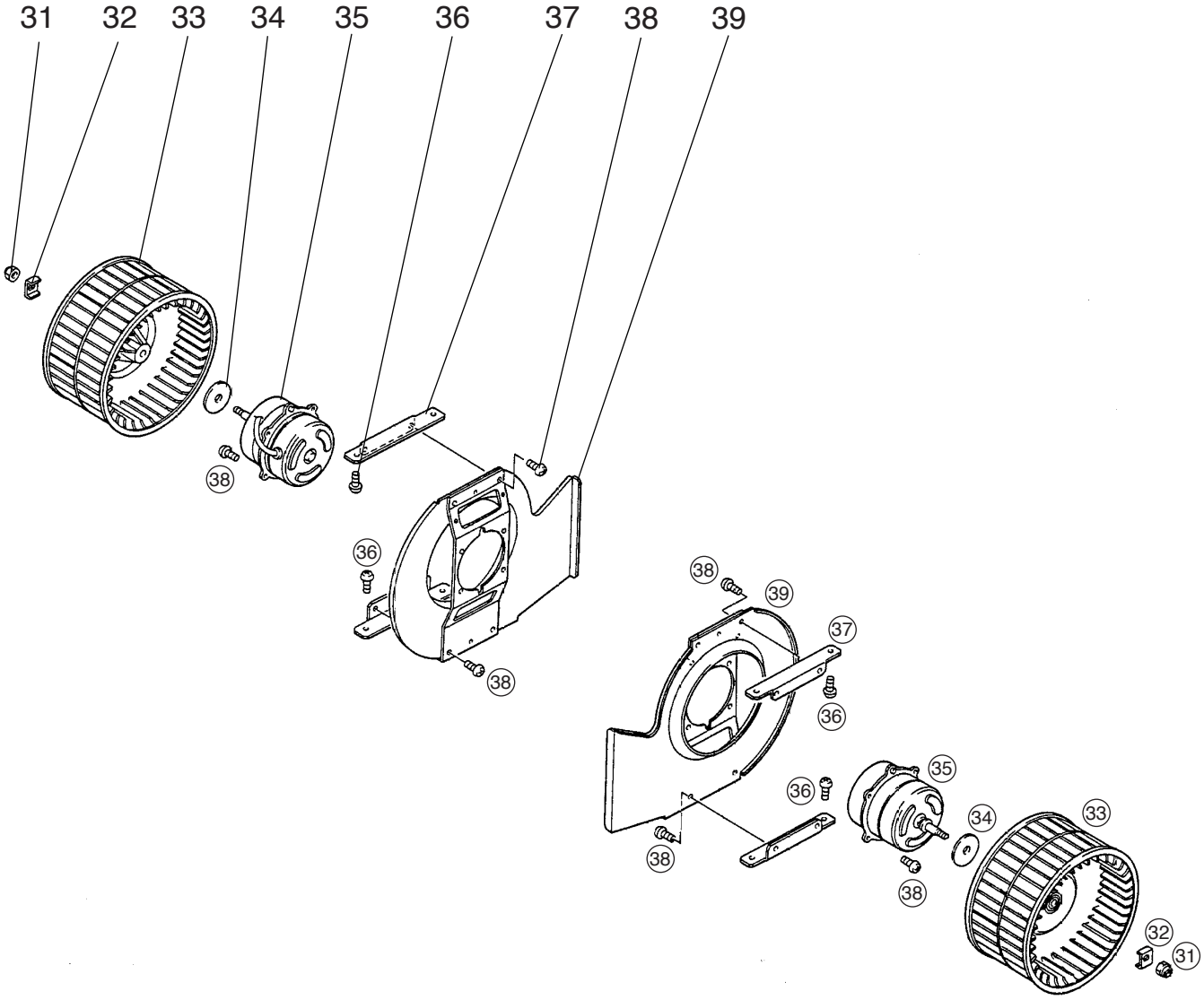

Model LGH-15RX4-E

No.	Parts No.	Name of part	Q'ty pcs/unit	Critical for safety	Remarks	Price
51.	Y50 061 693	Damper motor cover	1			
52.	R50 213 715	Damper support	1			
53.	M31 234 089	Special bush	2			
54.	R50 095 156	Pull spring	1			
55.	R50 213 713	Damper	1			
56.	Y50 061 260	Damper motor	1	⚠	220-240V	
57.	R50 054 225	Bush	2			
58.	R50 228 150	Rod	1			
59.	Y50 061 706	Control cover	1			
60.	K83 170 228	Cord band	1			
61.	M45 017 228	Cord band	1			
62.	Y50 047 216	Transformer	1	⚠	230VAC	
63.	Y50 116 235	Capacitor	2	⚠	1.5μF·440VAC	
64.	H00 011 008	PT screw 4×8(BS)	2			
65.	H00 013 076	Lock washer	3			
66.	Y50 116 706	Earth fix plate	1			
67.	H00 154 005	PPT screw 4×12	2			
68.	K81 432 236	Terminal block	1	⚠	3P ML-20	
69.	Y50 108 226	Insulation plate	1			
70.	Y50 116 707	Circuit fix plate	1			
71.	Y50 116 368	Wiring diagram	1			
72.	H00 000 003	PP screw 4×8	2			
73.	Y50 116 171	Circuit board	1	⚠	LG-X02-E	
74.	X40 139 095	Spacer	4			
75.	R50 477 167	Thermistor	1	⚠		
76.	D42 019 095	Spacer	4			
77.	M35 164 224	Cord clip	1			
78.	K82 163 225	Cord bush	2			
79.	K83 223 225	Bush	1			

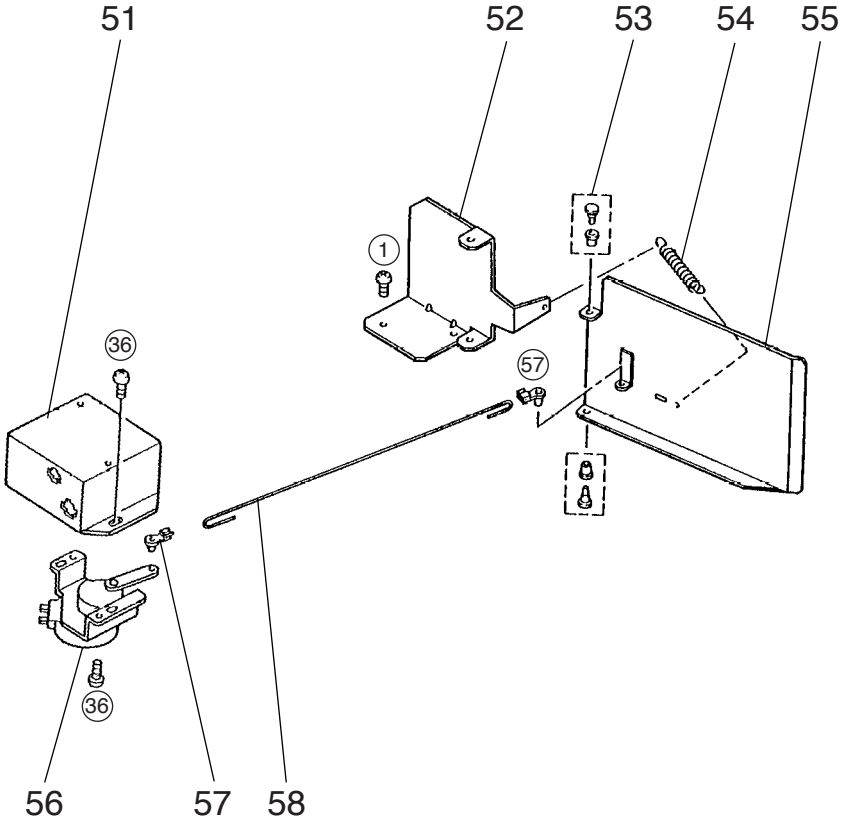
51
52
53
54
55
1
36
57
36
56
57
58

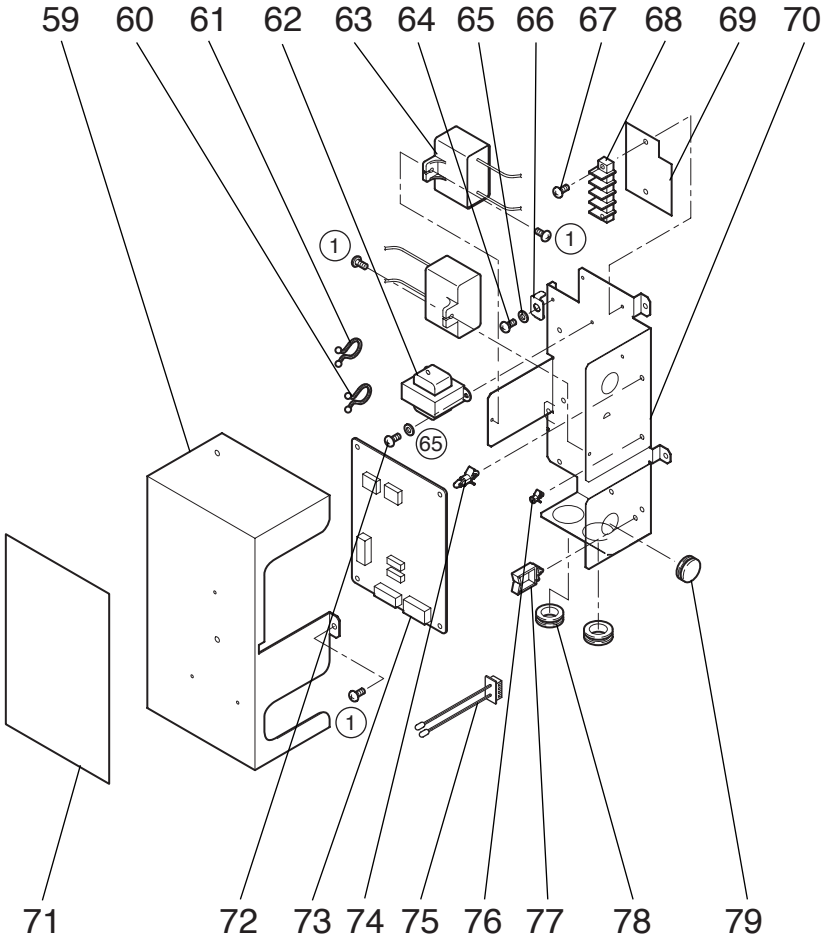
59
60
61
62
63
64
65
66
67
68
69
70
1
1
65
1
71
72
73
74
75
76
77
78
79

Model LGH-25RX4-E

No.	Parts No.	Name of part	Q'ty pcs/unit	Critical for safety	Remarks	Price
1.	H00 000 487	PTT screw 4×8	18			
2.	R50 323 609	Flange	2			
3.	R50 476 380	Hanger	4			
4.	H00 189 007	PTT screw 5×10	4			
5.	Y50 075 707	Maintenance cover	1			
6.	R50 395 382	Core guide	1			
7.	Y50 061 718	Filter	2	⚠		
8.	R50 476 711	Lossnay core	2	⚠		
9.	R50 476 382	Core guide	1			
10.	R50 476 708	Cover	2			
11.	R50 466 344	Hinge	1			
12.	M34 074 017	Special screw 4×11	1			
13.	Y50 029 712	Fix plate	1			
14.	Y50 061 704	Hanger cover	4			
15.	R50 483 704	Lead support	1			
16.	R50 354 718	Sound absorbing material	1	⚠	SA	
17.	Y50 075 609	Flange	2			

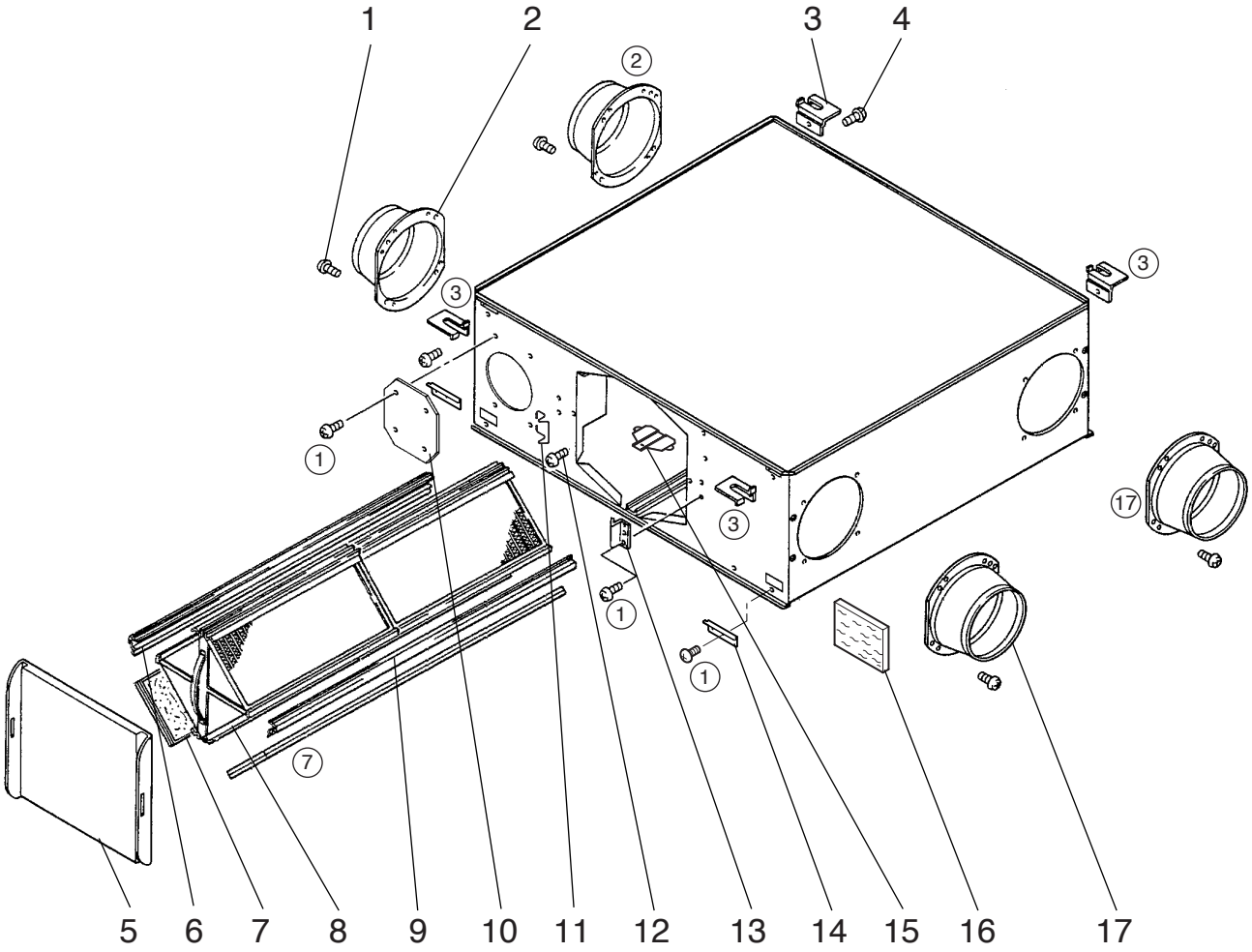

Model LGH-25RX4-E

No.	Parts No.	Name of part	Q'ty pcs/unit	Critical for safety	Remarks	Price
31.	R50 331 067	Special nut	2			
32.	M34 398 077	Tab washer	2			
33.	R50 354 480	Centrifugal fan	2	⚠	φ180	
34.	R50 028 465	Special washer	2			
35.	Y50 117 451	Motor	2	⚠		
36.	H00 312 007	PTT screw 4×6	22			
37.	R50 214 708	Motor plate	4			
38.	H00 000 332	PTT screw 4×10	12			
39.	Y50 030 707	Motor base	2			

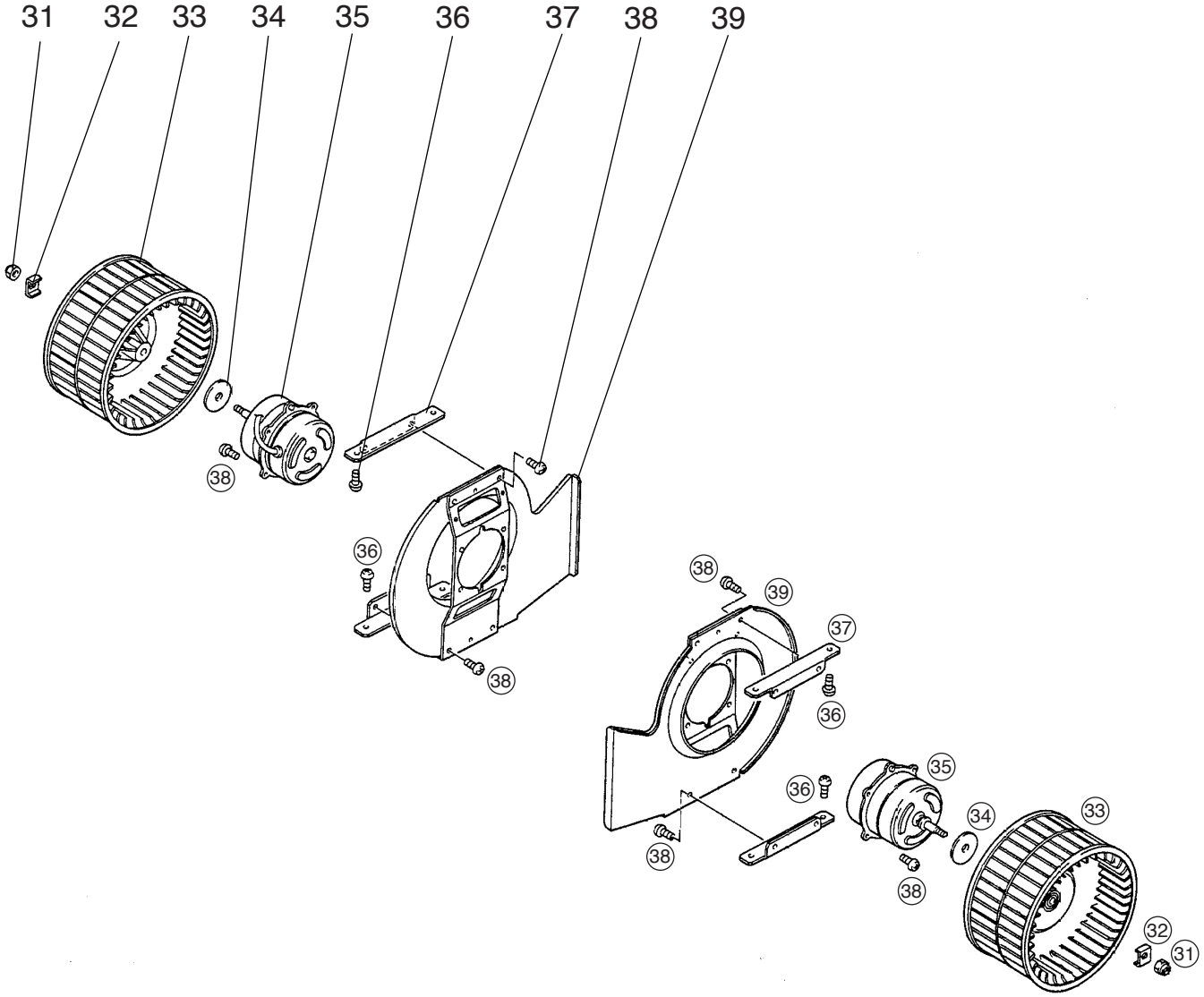

Model LGH-25RX4-E

No.	Parts No.	Name of part	Q'ty pcs/unit	Critical for safety	Remarks	Price
51.	Y50 061 693	Damper motor cover	1			
52.	R50 213 715	Damper support	1			
53.	M31 234 089	Special bush	2			
54.	R50 095 156	Pull spring	1			
55.	R50 213 713	Damper	1			
56.	Y50 061 260	Damper motor	1		220-240V	
57.	R50 054 225	Bush	2			
58.	R50 230 150	Rod	1			
59.	Y50 061 706	Control cover	1			
60.	K83 170 228	Cord band	1			
61.	M45 017 228	Cord band	1			
62.	Y50 047 216	Transformer	1		230VAC	
63.	Y50 116 235	Capacitor	2		1.5μF·440VAC	
64.	H00 011 008	PT screw 4×8(BS)	2			
65.	H00 013 076	Lock washer	3			
66.	Y50 116 706	Earth fix plate	1			
67.	H00 154 005	PPT screw 4×12	2			
68.	K81 432 236	Terminal block	1		3P ML-20	
69.	Y50 108 226	Insulation plate	1			
70.	Y50 116 707	Circuit fix plate	1			
71.	Y50 116 368	Wiring diagram	1			
72.	H00 000 003	PP screw 4×8	2			
73.	Y50 116 171	Circuit board	1		LG-X02-E	
74.	X40 139 095	Spacer	4			
75.	R50 477 167	Thermistor	1			
76.	D42 019 095	Spacer	4			
77.	M35 164 224	Cord clip	1			
78.	K82 163 225	Cord bush	2			
79.	K83 223 225	Bush	1			

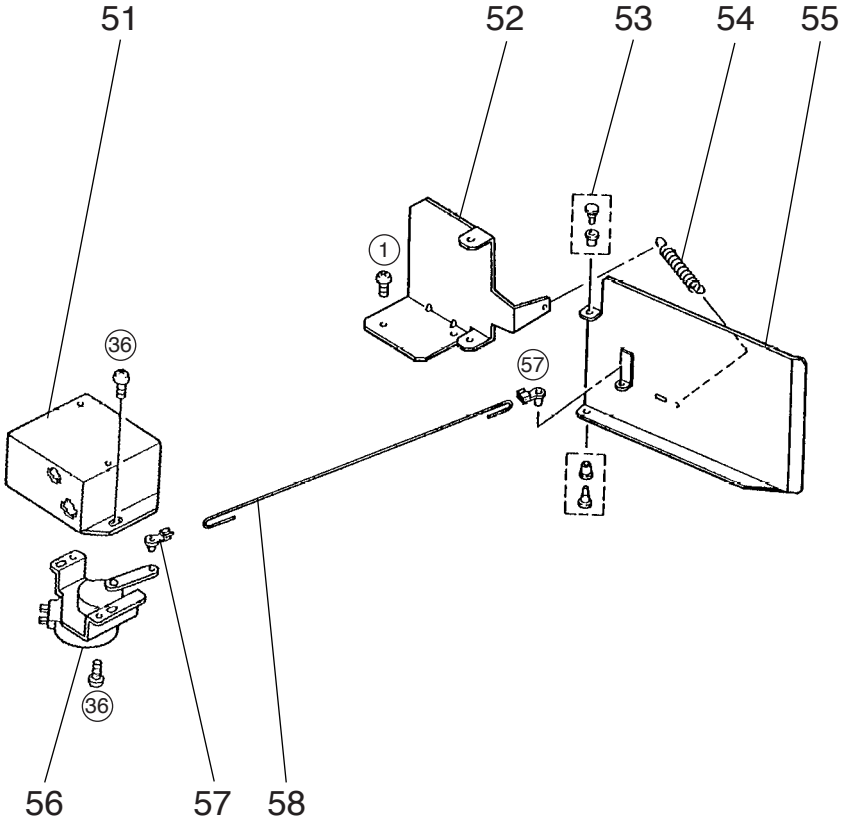
51
52
53
54
55
1
36
57
36
56
57
58

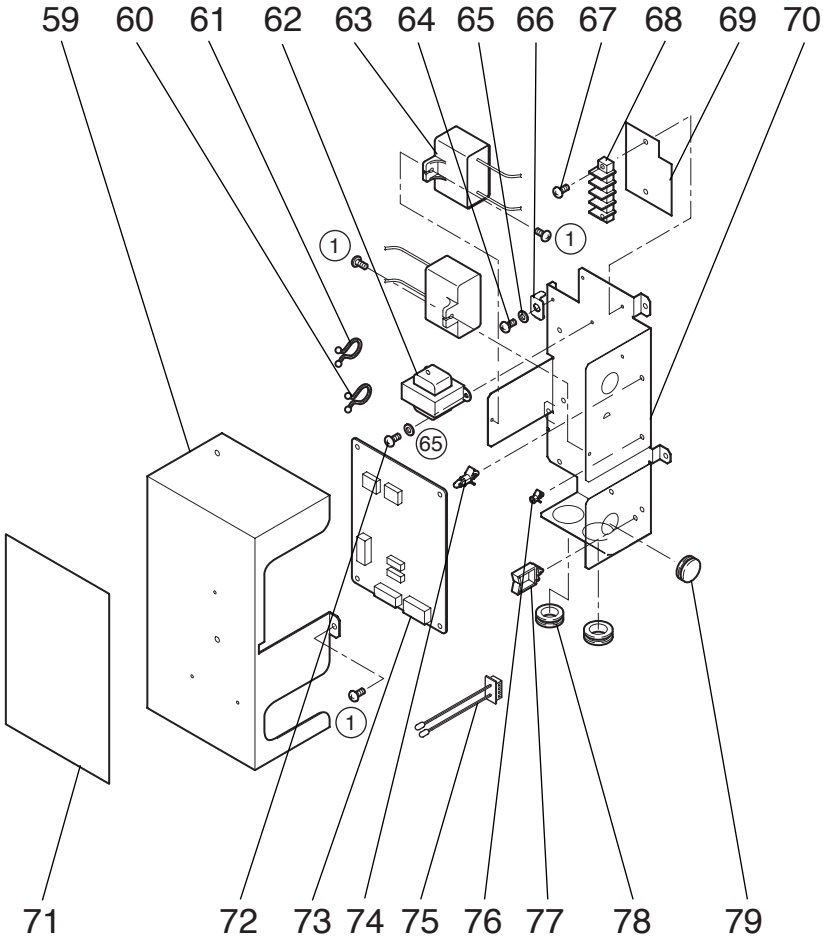
59
60
61
62
63
64
65
66
67
68
69
70
1
1
65
1
71
72
73
74
75
76
77
78
79

Model LGH-35RX4-E

No.	Parts No.	Name of part	Q'ty pcs/unit	Critical for safety	Remarks	Price
1.	R50 323 609	Flange	2			
2.	R50 476 380	Hanger	4			
3.	H00 189 007	PTT screw 5×10	4			
4.	R50 483 705	Hanger support	4			
5.	Y50 061 704	Hanger cover	4			
6.	X50 002 707	Maintenance cover	1			
7.	R50 396 381	Core guide	1			
8.	Y50 062 717	Filter	2	⚠		
9.	R50 478 710	Lossnay core	2	⚠		
10.	R50 478 381	Core guide	1			
11.	R50 476 708	Cover	2			
12.	R50 466 344	Hinge	1			
13.	M34 074 017	Special screw 4×11	1			
14.	H00 000 487	PTT screw 4×8	20			
15.	Y50 029 712	Fix plate	1			
16.	R50 483 704	Lead support	1			
17.	Y50 075 609	Flange	2			

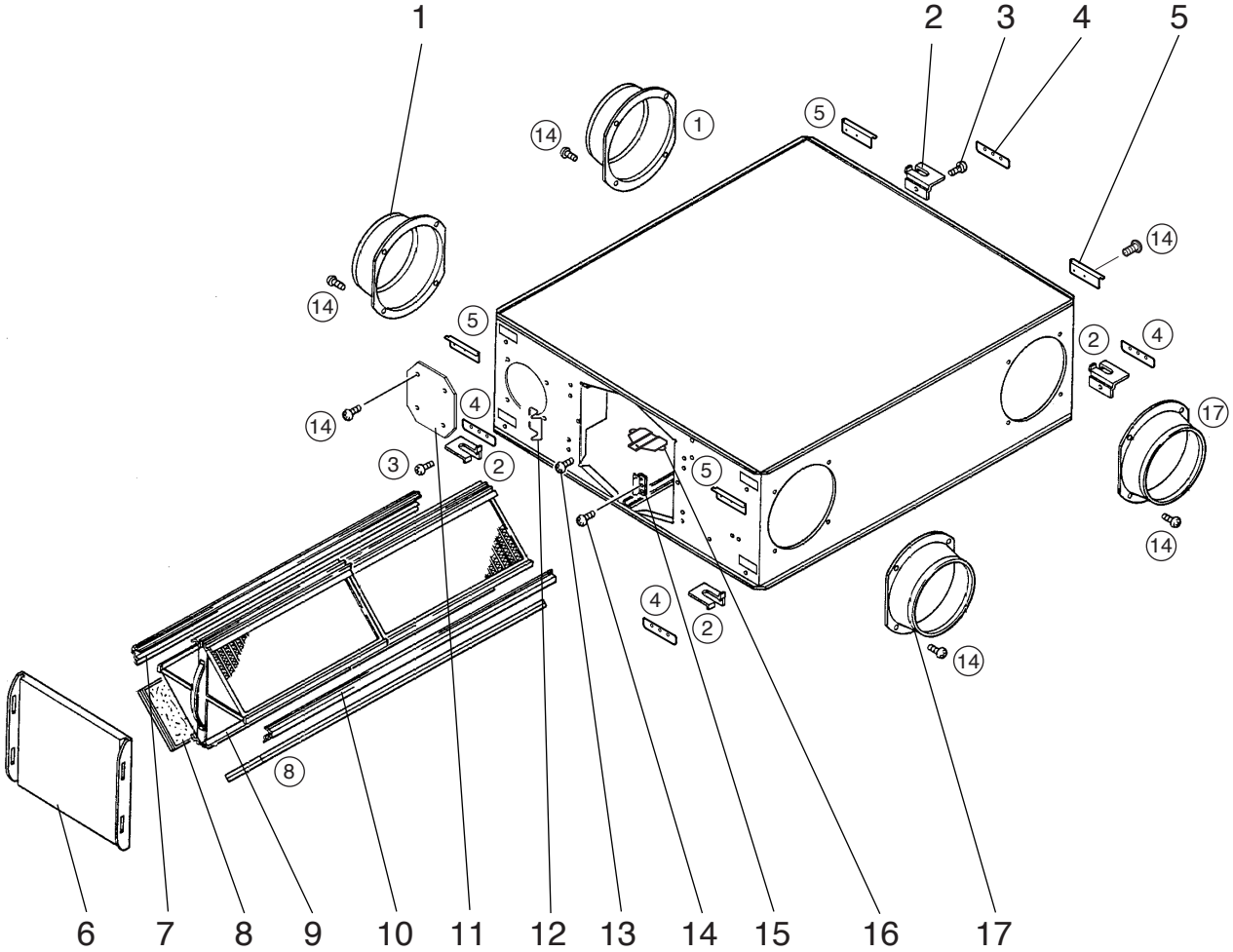

Model LGH-35RX4-E

No.	Parts No.	Name of part	Q'ty pcs/unit	Critical for safety	Remarks	Price
31.	R50 331 067	Special nut	2			
32.	M34 398 077	Tab washer	2			
33.	R50 351 480	Centrifugal fan	2	⚠	φ220	
34.	R50 478 707	Motor base	2			
35.	M34 706 465	Special washer	2			
36.	Y50 062 451	Motor	2	⚠		
37.	R50 351 713	Motor fix plate	2			
38.	H00 189 007	PTT screw 5x10	16			

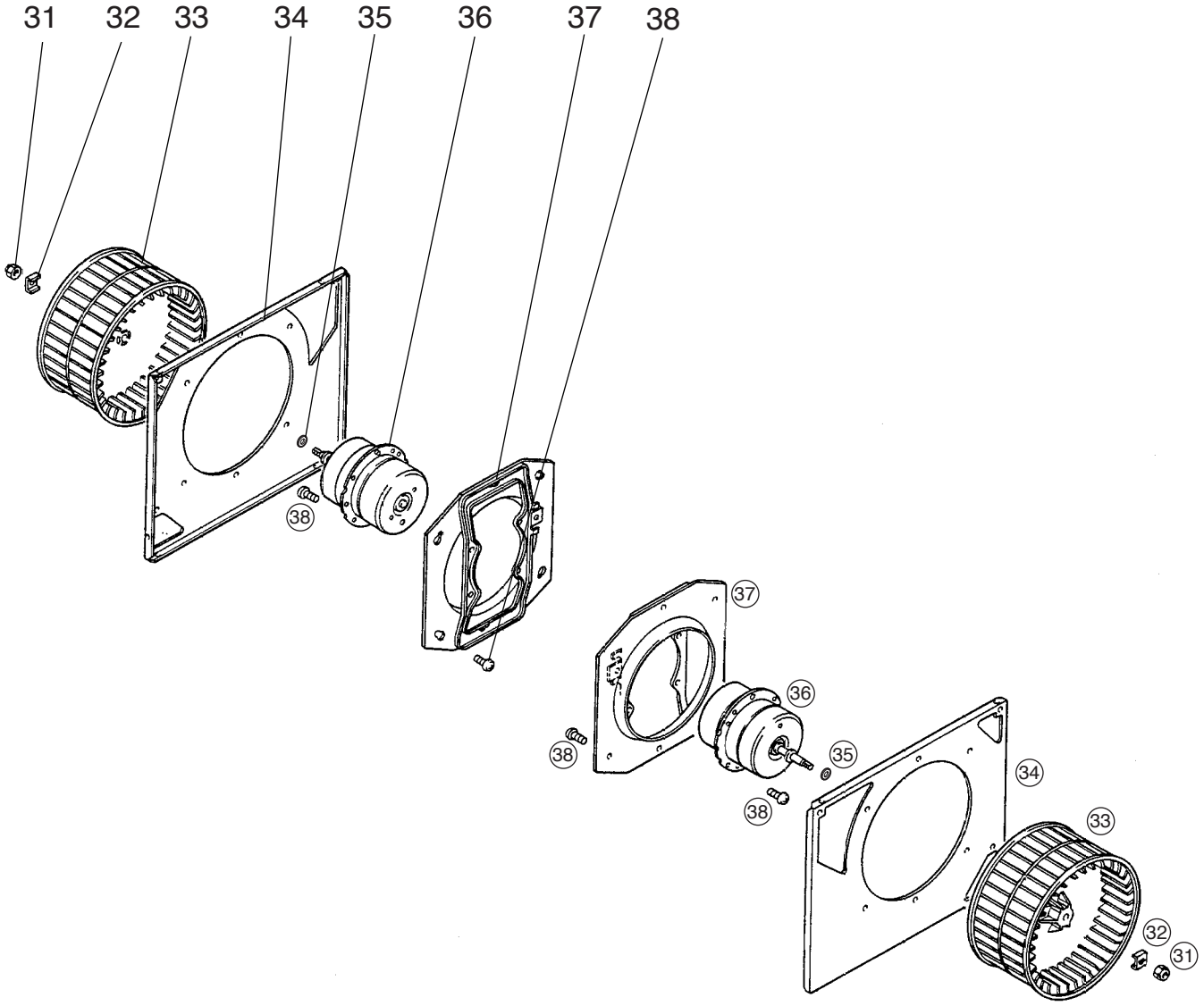

Model LGH-35RX4-E

No.	Parts No.	Name of part	Q'ty pcs/unit	Critical for safety	Remarks	Price
51.	Y50 061 693	Damper motor cover	1			
52.	H00 312 007	PTT screw 4×6	23			
53.	R50 069 156	Pull spring	1			
54.	R50 472 716	Damper support	1			
55.	M31 234 089	Special bush	2			
56.	R50 472 715	Damper	1			
57.	Y50 061 260	Damper motor	1	⚠	220-240V	
58.	R50 054 225	Bush	2			
59.	R50 231 150	Rod	1			
60.	Y50 061 706	Control cover	1			
61.	K83 170 228	Cord band	1			
62.	M45 017 228	Cord band	1			
63.	Y50 047 216	Transformer	1	⚠	230VAC	
64.	Y50 088 235	Capacitor	2	⚠	2.5μF·440VAC	
65.	H00 011 008	PT screw 4×8(BS)	2			
66.	H00 013 076	Lock washer	3			
67.	Y50 116 706	Earth fix plate	1			
68.	H00 154 005	PPT screw 4×12	2			
69.	K81 432 236	Terminal block	1	⚠	3P ML-20	
70.	Y50 108 226	Insulation plate	1			
71.	Y50 116 707	Circuit fix plate	1			
72.	Y50 116 368	Wiring diagram	1			
73.	H00 000 003	PP screw 4×8	2			
74.	Y50 116 171	Circuit board	1	⚠	LG-X02-E	
75.	X40 139 095	Spacer	4			
76.	R50 477 167	Thermistor	1	⚠		
77.	D42 019 095	Spacer	4			
78.	M35 164 224	Cord clip	1			
79.	K82 163 225	Cord bush	2			
80.	K83 223 225	Bush	1			

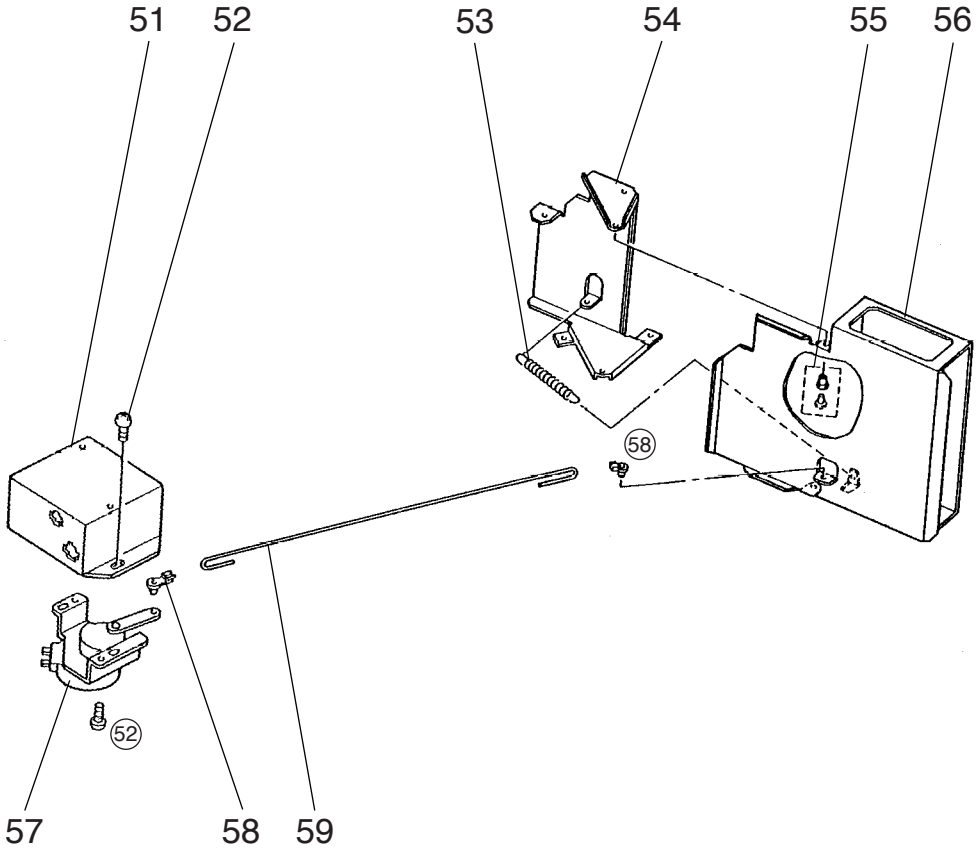
51
52
53
54
55
56
58
52
57
58
59

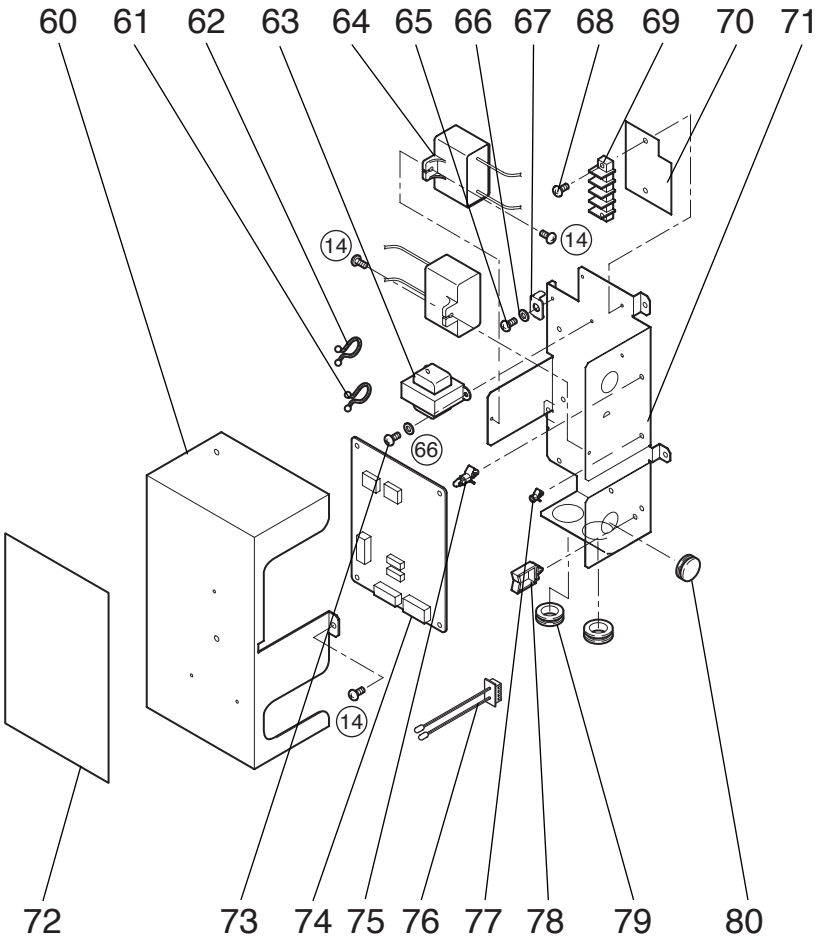
60
61
62
63
64
65
66
67
68
69
70
71
14
14
66
14
72
73
74
75
76
77
78
79
80

Model LGH-50RX4-E

No.	Parts No.	Name of part	Q'ty pcs/unit	Critical for safety	Remarks	Price
1.	R50 028 610	Flange	2			
2.	R50 476 380	Hanger	4			
3.	H00 189 007	PTT screw 5×10	4			
4.	R50 483 705	Hanger support	4			
5.	Y50 061 704	Hanger cover	4			
6.	X50 002 707	Maintenance cover	1			
7.	R50 216 381	Core guide	1			
8.	Y50 062 718	Filter	2	⚠		
9.	R50 478 711	Lossnay core	2	⚠		
10.	R50 478 382	Core guide	1			
11.	R50 351 708	Cover	2			
12.	R50 466 344	Hinge	1			
13.	M34 074 017	Special screw 4×11	1			
14.	H00 000 487	PTT screw 4×8	20			
15.	Y50 029 712	Fix plate	1			
16.	R50 483 704	Lead support	1			
17.	R50 429 609	Flange	2			

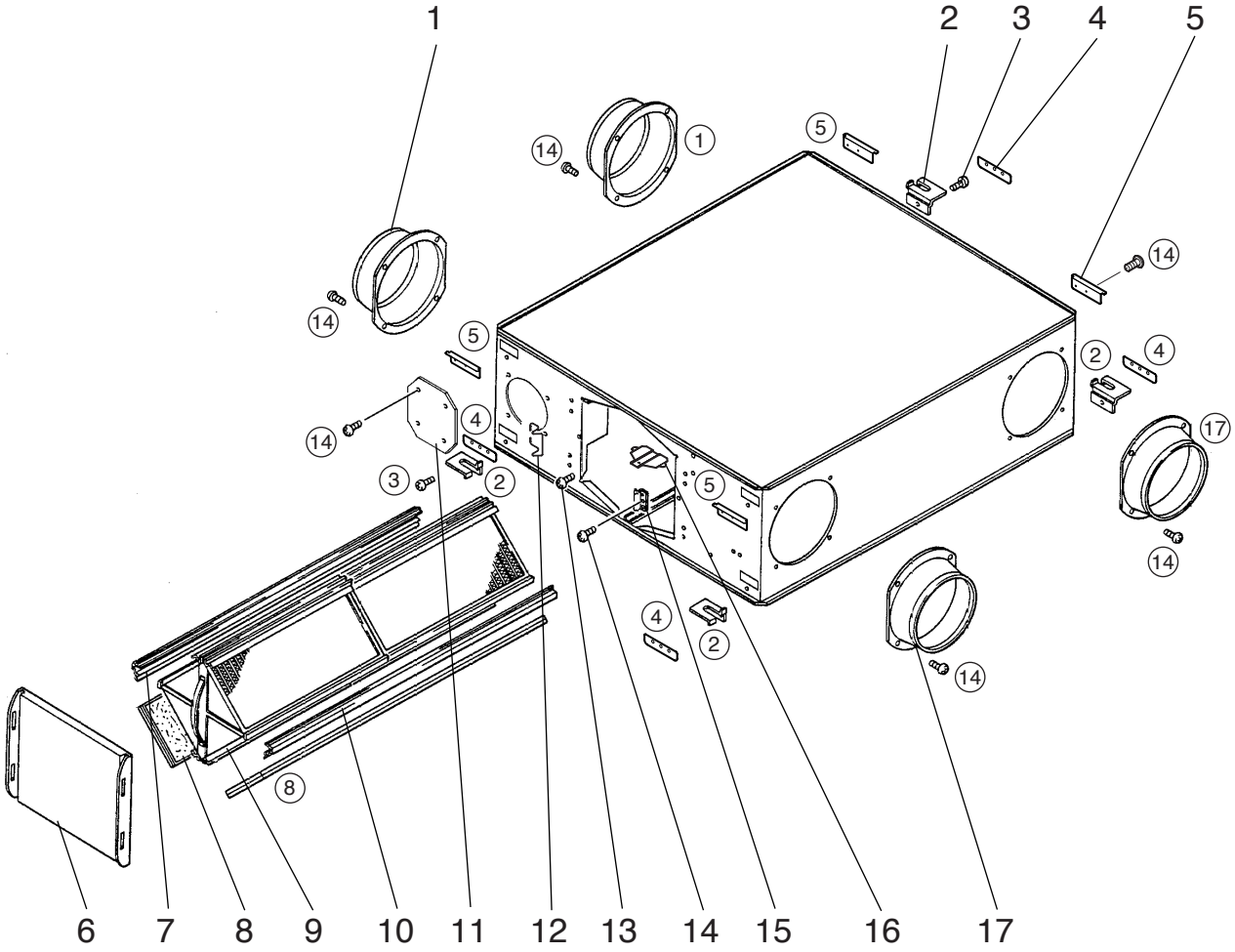

Model LGH-50RX4-E

No.	Parts No.	Name of part	Q'ty pcs/unit	Critical for safety	Remarks	Price
31.	R50 331 067	Special nut	2			
32.	M34 398 077	Tab washer	2			
33.	R50 351 480	Centrifugal fan	2	⚠	φ220	
34.	R50 478 707	Motor base	2			
35.	M34 706 465	Special washer	2			
36.	Y50 062 452	Motor	2	⚠		
37.	R50 351 713	Motor fix plate	2			
38.	H00 189 007	PTT screw 5×10	16			

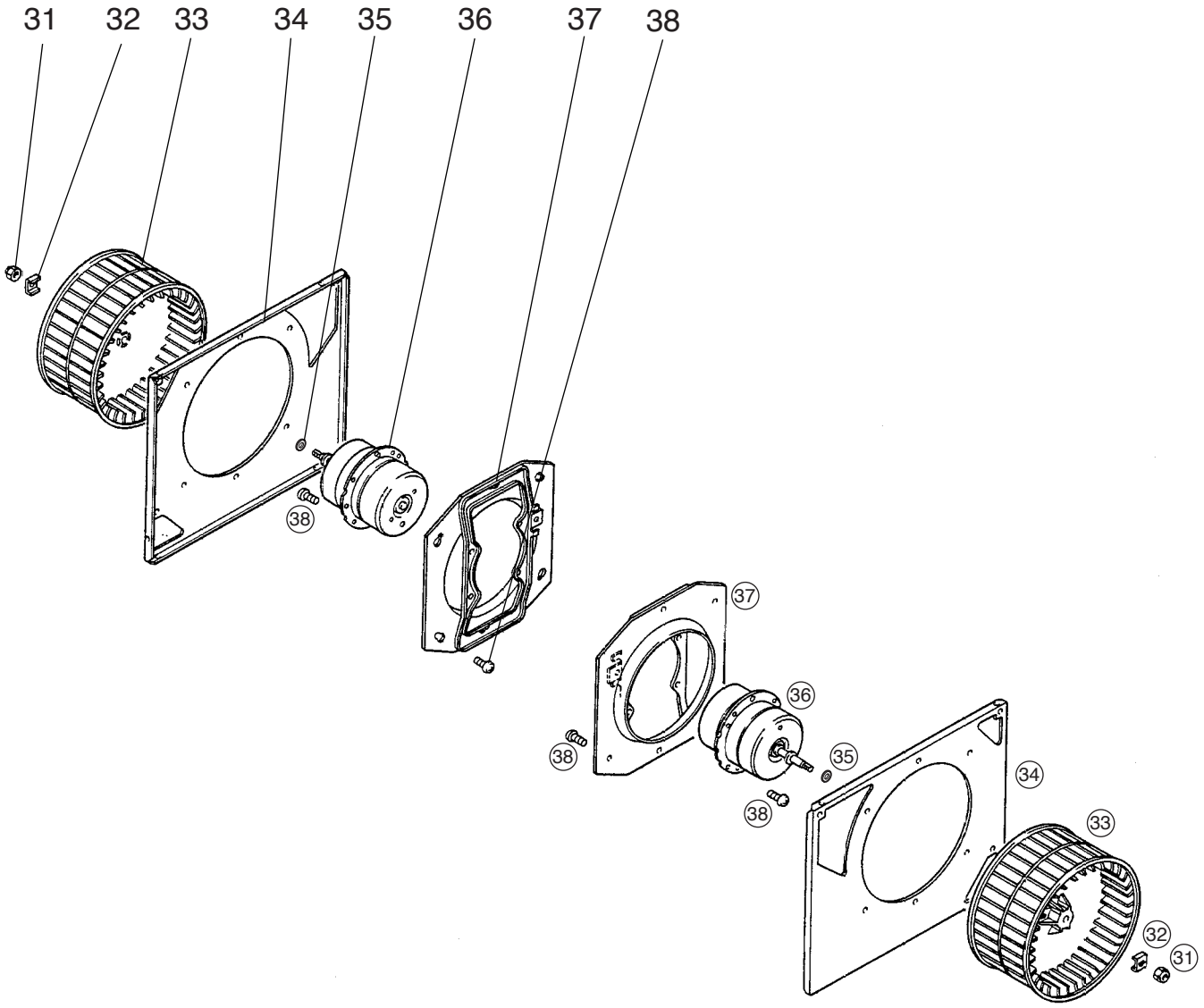

Model LGH-50RX4-E

No.	Parts No.	Name of part	Q'ty pcs/unit	Critical for safety	Remarks	Price
51.	Y50 061 693	Damper motor cover	1			
52.	H00 312 007	PTT screw 4×6	23			
53.	R50 069 156	Pull spring	1			
54.	R50 472 716	Damper support	1			
55.	M31 234 089	Special bush	2			
56.	R50 472 715	Damper	1			
57.	Y50 061 260	Damper motor	1	⚠	220-240V	
58.	R50 054 225	Bush	2			
59.	R50 232 150	Rod	1			
60.	Y50 061 706	Control cover	1			
61.	K83 170 228	Cord band	1			
62.	M45 017 228	Cord band	1			
63.	Y50 047 216	Transformer	1	⚠	230VAC	
64.	Y50 091 235	Capacitor	2	⚠	4μF·440VAC	
65.	H00 011 008	PT screw 4×8(BS)	2			
66.	H00 013 076	Lock washer	3			
67.	Y50 116 706	Earth fix plate	1			
68.	H00 154 005	PPT screw 4×12	2			
69.	K81 432 236	Terminal block	1	⚠	3P ML-20	
70.	Y50 108 226	Insulation plate	1			
71.	Y50 116 707	Circuit fix plate	1			
72.	Y50 116 368	Wiring diagram	1			
73.	H00 000 003	PP screw 4×8	2			
74.	Y50 116 171	Circuit board	1	⚠	LG-X02-E	
75.	X40 139 095	Spacer	4			
76.	R50 477 167	Thermistor	1	⚠		
77.	D42 019 095	Spacer	4			
78.	M35 164 224	Cord clip	1			
79.	K82 163 225	Cord bush	2			
80.	K83 223 225	Bush	1			

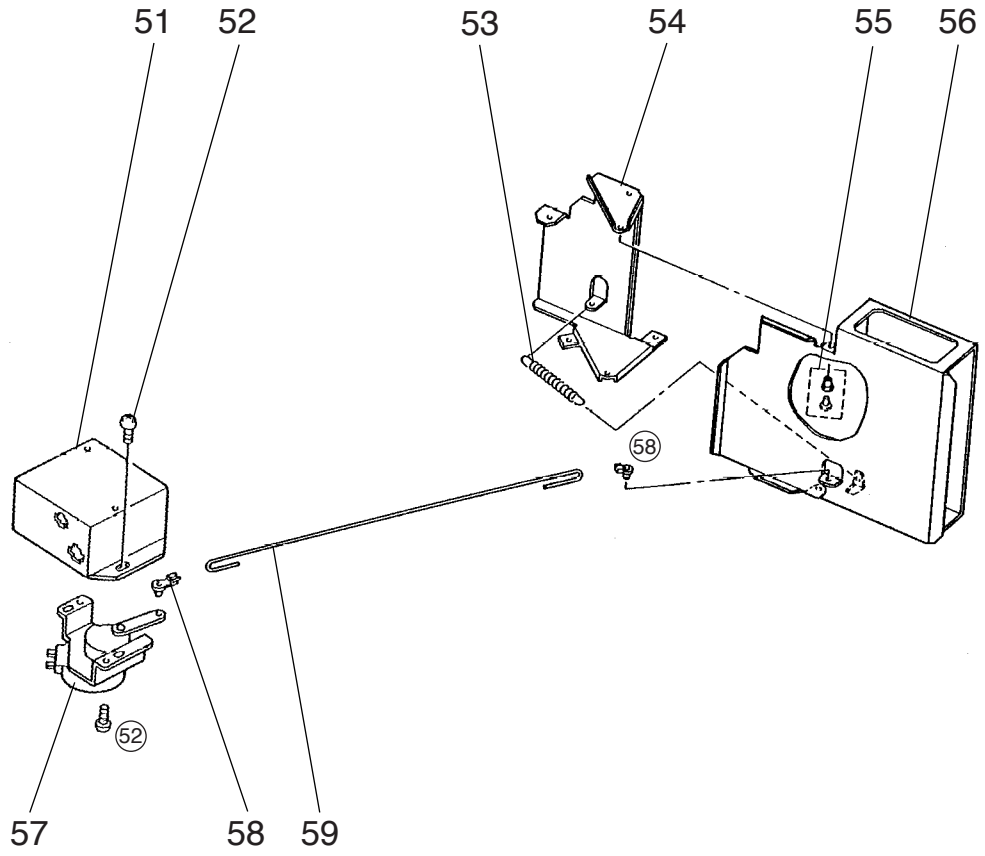
51
52
53
54
55
56
58
52
57
58
59

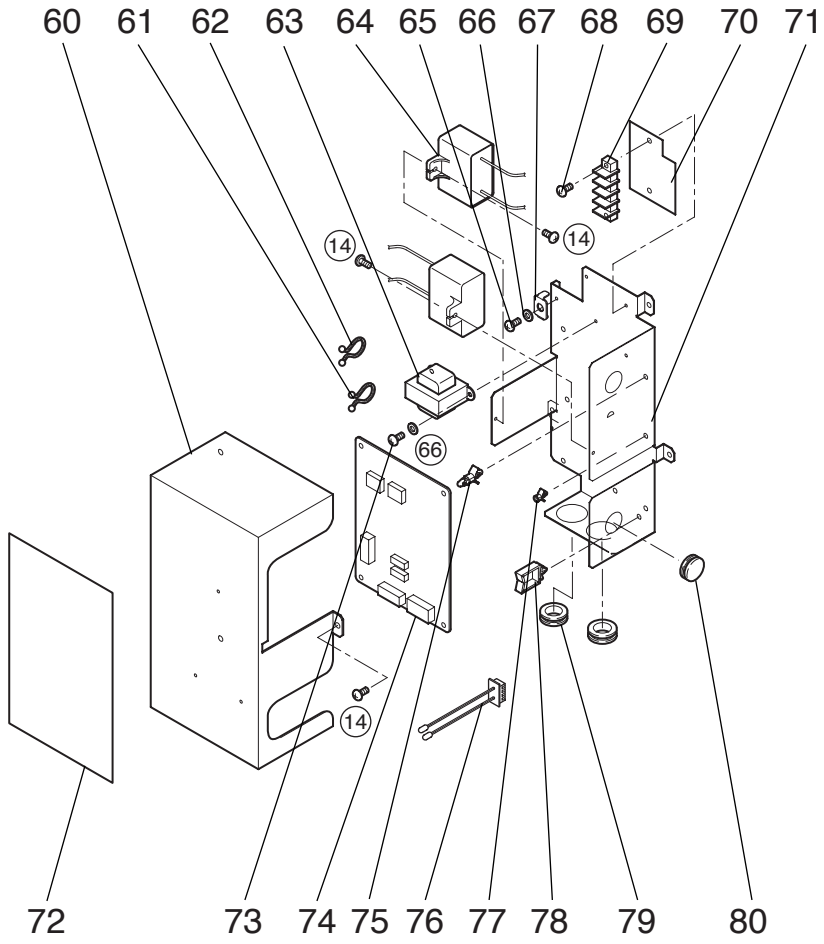
60
61
62
63
64
65
66
67
68
69
70
71
14
14
66
14
72
73
74
75
76
77
78
79
80

Model LGH-65RX4-E

No.	Parts No.	Name of part	Q'ty pcs/unit	Critical for safety	Remarks	Price
1.	R50 028 610	Flange	2			
2.	H00 000 487	PTT screw 4×8	18			
3.	R50 479 380	Hanger	4			
4.	H00 189 007	PTT screw 5×10	4			
5.	R50 479 704	Hanger cover	4			
6.	R50 217 708	Maintenance cover	1			
7.	R50 217 381	Core guide	1			
8.	Y50 120 717	Filter	2	⚠		
9.	R50 479 710	Lossnay core	2	⚠		
10.	R50 479 381	Core guige	1			
11.	R50 351 708	Cover	2			
12.	R50 466 344	Hinge	1			
13.	M34 074 017	Special screw 4×11	1			
14.	Y50 029 712	Fix plate	1			
15.	R50 483 704	Lead support	2			
16.	R50 357 717	Sound absorbing material	1	⚠	SA	
17.	R50 429 609	Flange	2			

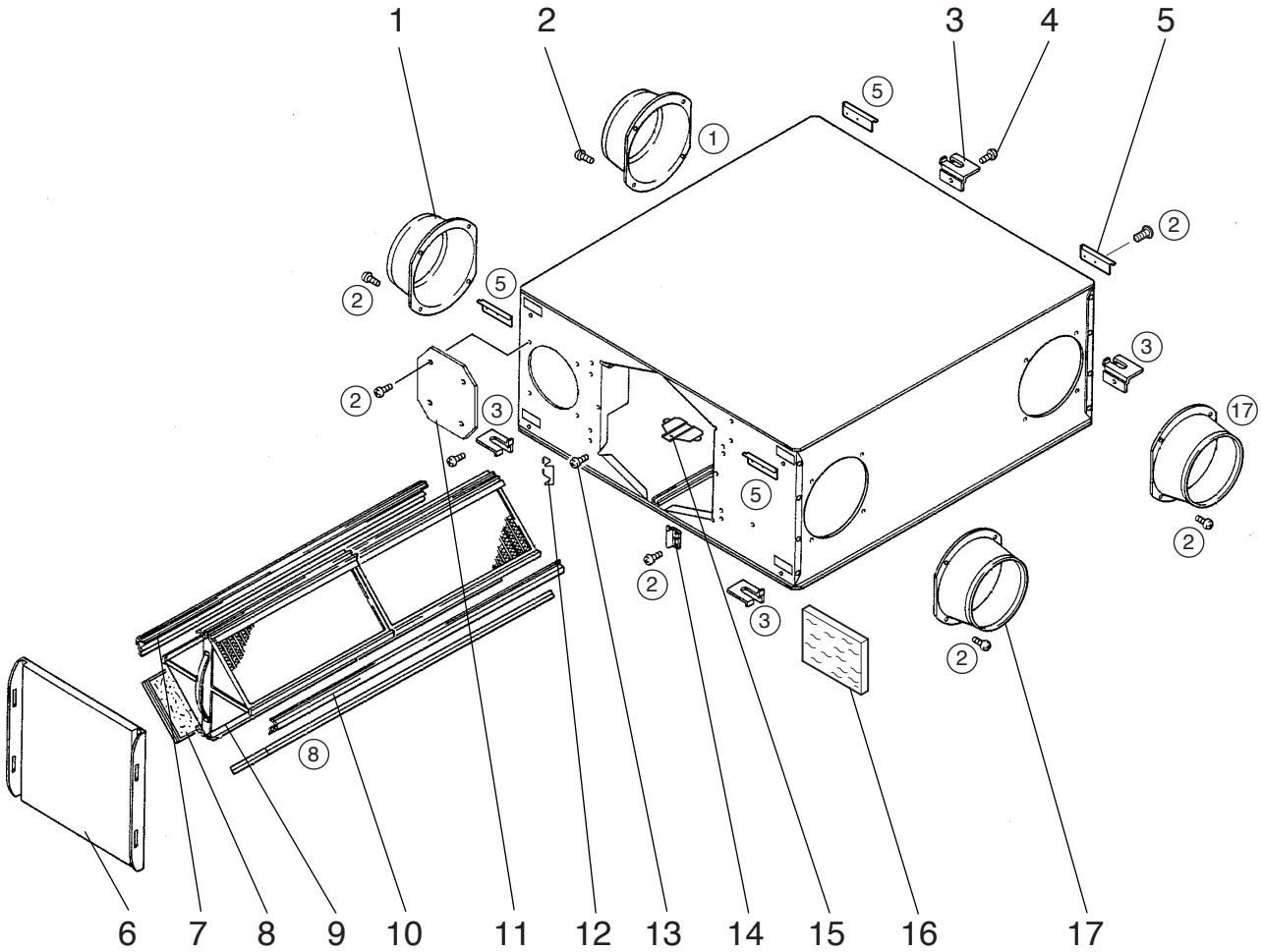

Model LGH-65RX4-E

No.	Parts No.	Name of part	Q'ty pcs/unit	Critical for safety	Remarks	Price
31.	R50 218 067	Special nut(12)	2			
32.	K83 466 113	Washer(12)	2			
33.	R50 479 480	Centrifugal fan	2	⚠	φ245	
34.	R50 357 707	Fan base	2			
35.	Y50 033 104	Key	2		5×5×11.5	
36.	R50 217 711	Inlet ring	2			
37.	H00 189 007	PTT screw 5×10	16			
38.	Y50 120 451	Motor	2	⚠		
39.	R50 263 712	Motor fix leg	4			
40.	R50 217 225	Bush	8			
41.	D40 135 095	Spacer	8			
42.	M34 043 080	Special washer	8			
43.	H00 000 606	PT screw 5×14	8			

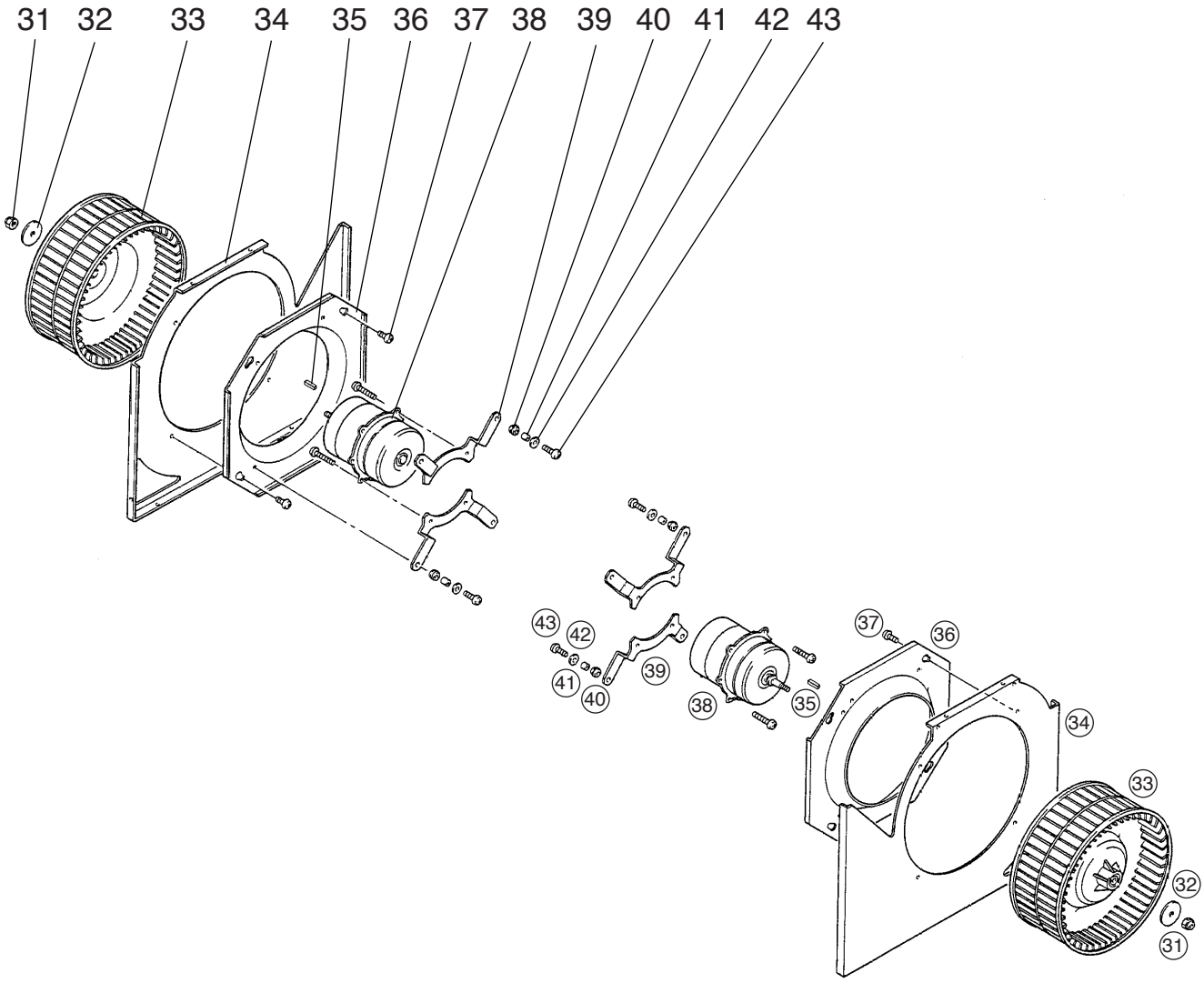

Model LGH-65RX4-E

No.	Parts No.	Name of part	Q'ty pcs/unit	Critical for safety	Remarks	Price
51.	Y50 061 693	Damper motor cover	1			
52.	R50 099 156	Pull spring	1			
53.	R50 472 716	Damper support	1			
54.	M31 234 089	Special bush	2			
55.	R50 472 715	Damper	1			
56.	Y50 061 260	Damper motor	1	⚠	220-240V	
57.	H00 312 007	PTT screw 4×6	2			
58.	R50 054 225	Bush	2			
59.	R50 233 150	Rod	1			
60.	Y50 061 706	Control cover	1			
61.	K83 170 228	Cord band	1			
62.	M45 017 228	Cord band	1			
63.	Y50 047 216	Transformer	1	⚠	230VAC	
64.	Y50 120 235	Capacitor	2	⚠	5μF·440VAC	
65.	H00 011 008	PT screw 4×8(BS)	2			
66.	H00 013 076	Lock washer	3			
67.	Y50 116 706	Earth fix plate	1			
68.	H00 154 005	PPT screw 4×12	2			
69.	K81 432 236	Terminal block	1	⚠	3P ML-20	
70.	Y50 108 226	Insulation plate	1			
71.	Y50 116 707	Circuit fix plate	1			
72.	Y50 116 368	Wiring diagram	1			
73.	H00 000 003	PP screw 4×8	2			
74.	Y50 116 171	Circuit board	1	⚠	LG-X02-E	
75.	X40 139 095	Spacer	4			
76.	R50 477 167	Thermistor	1	⚠		
77.	D42 019 095	Spacer	4			
78.	M35 164 224	Cord clip	1			
79.	K82 163 225	Cord bush	2			
80.	K83 223 225	Bush	1			

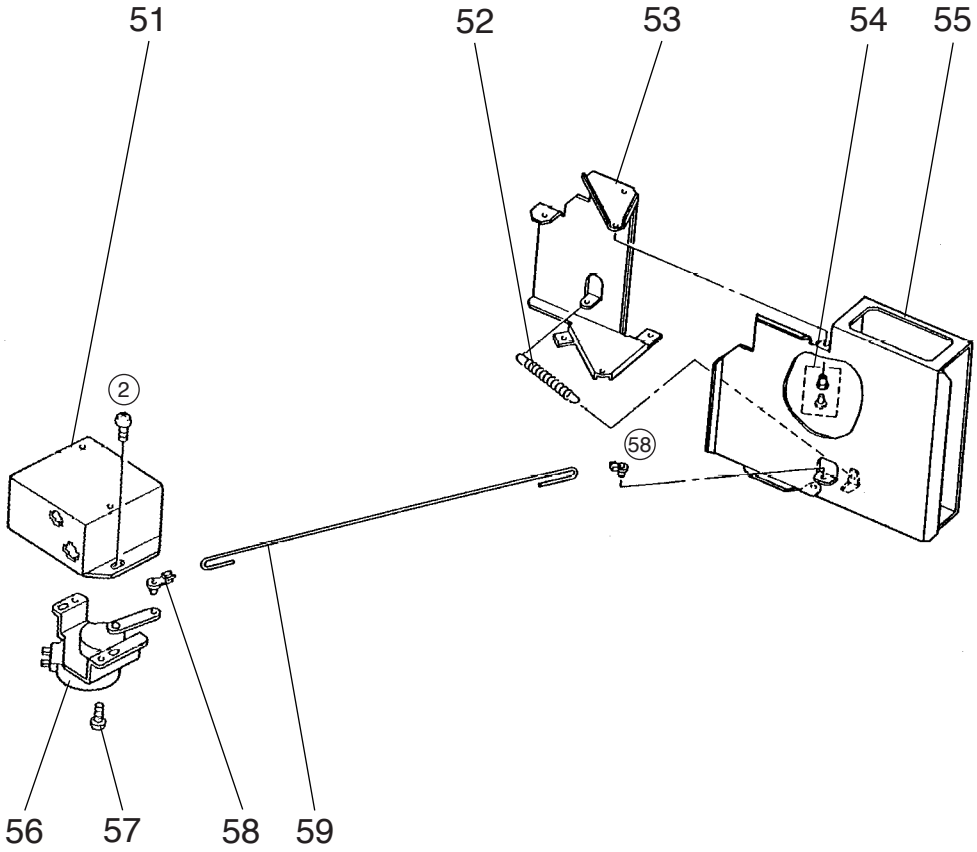
51
52
53
54
55
2
58
56
57
58
59

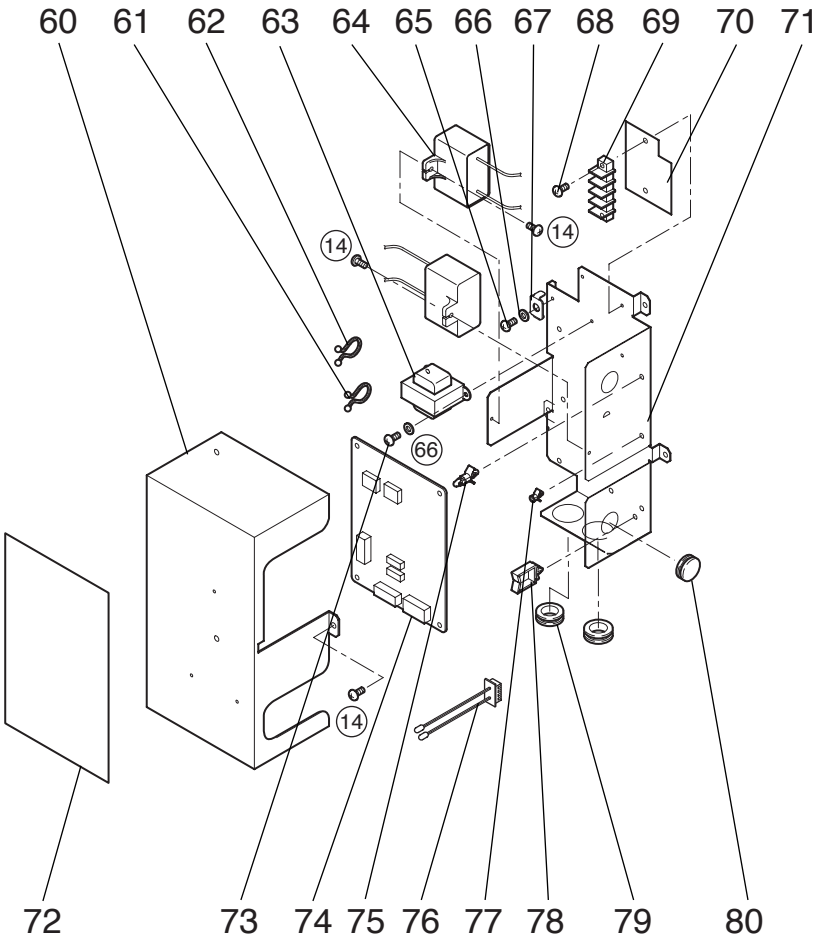
60
61
62
63
64
65
66
67
68
69
70
71
14
14
66
14
72
73
74
75
76
77
78
79
80

Model LGH-80RX4-E

No.	Parts No.	Name of part	Q'ty pcs/unit	Critical for safety	Remarks	Price
1.	H00 000 488	PTT screw 4×12	10			
2.	R50 430 609	Flange	2			
3.	H00 000 487	PTT screw 4×8	18			
4.	R50 095 380	Hanger	4			
5.	H00 000 244	PT screw 6×12	16			
6.	X50 004 707	Maintenance cover	1			
7.	R50 218 381	Core guide	1			
8.	Y50 063 717	Filter	2	⚠		
9.	R50 480 710	Lossnay core	2	⚠		
10.	R50 480 381	Core guide	1			
11.	R50 358 704	Cover	2			
12.	R50 466 344	Hinge	1			
13.	M34 074 017	Special screw 4×11	1			
14.	Y50 029 712	Fix plate	2			
15.	R50 483 704	Lead support	2			
16.	Y50 126 718	Sound absorbing material	1			
17.	Y50 021 609	Flange	2			

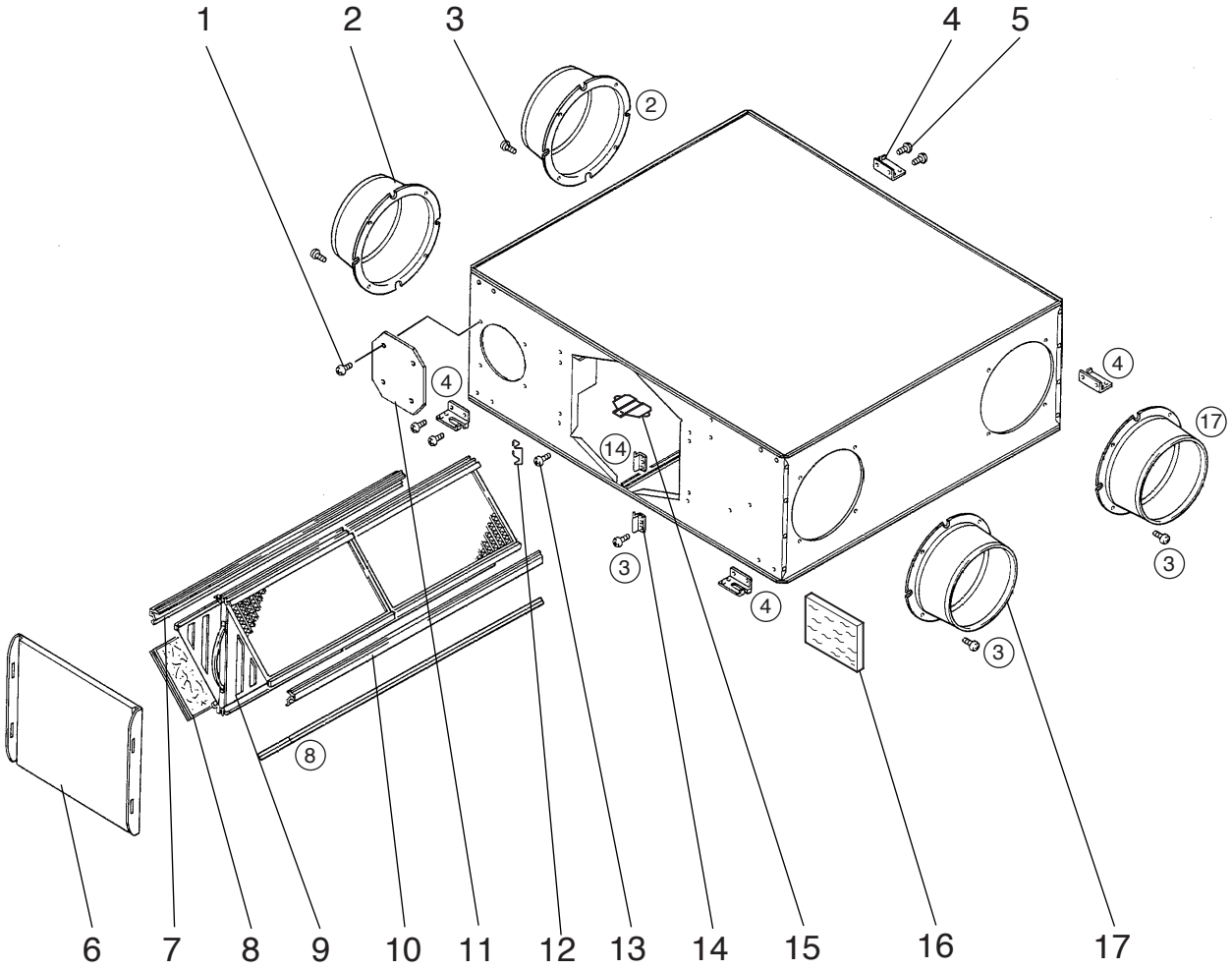

Model LGH-80RX4-E

No.	Parts No.	Name of part	Q'ty pcs/unit	Critical for safety	Remarks	Price
31.	R50 218 067	Special nut(12)	2			
32.	K83 466 113	Washer(12)	2			
33.	R50 479 480	Centrifugal fan	2	⚠	φ245	
34.	H00 157 008	PT screw 6×20	8			
35.	M34 043 080	Special washer	8			
36.	D40 135 095	Spacer	8			
37.	R50 217 225	Bush	8			
38.	R50 480 707	Fan base	2			
39.	Y50 033 104	Key	2		5×5×11.5	
40.	R50 264 711	Inlet plate	2			
41.	R50 264 712	Motor fix leg	2			
42.	H00 189 007	PTT screw 5×10	16			
43.	Y50 121 451	Motor	2	⚠		
44.	H00 061 050	Nut(6)	8			

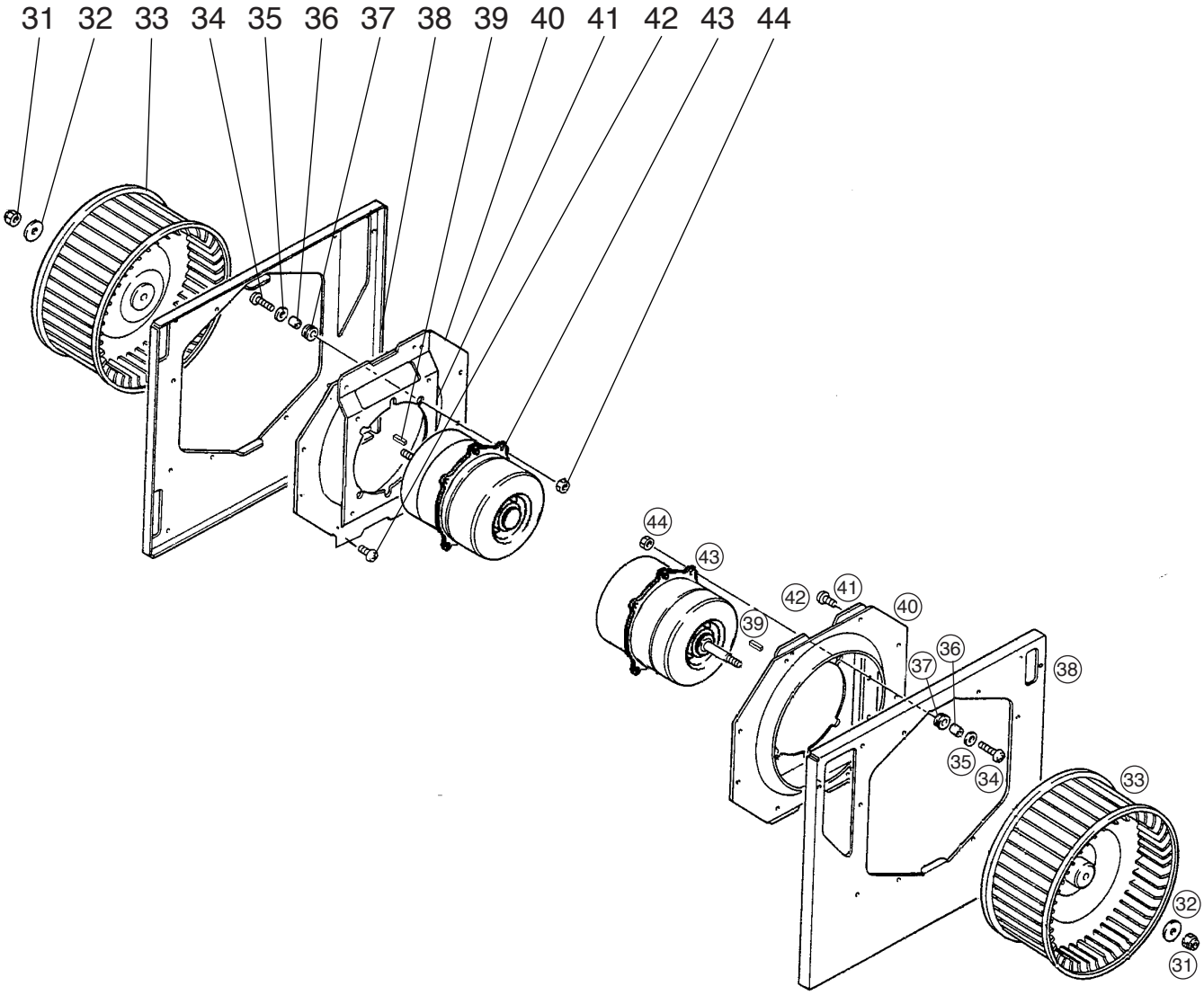

Model LGH-80RX4-E

No.	Parts No.	Name of part	Q'ty pcs/unit	Critical for safety	Remarks	Price
51.	Y50 061 693	Damper motor cover	1			
52.	R50 074 156	Pull spring	1			
53.	R50 473 715	Damper support	1			
54.	M31 234 089	Special bush	2			
55.	R50 473 716	Damper	1			
56.	Y50 061 260	Damper motor	1	⚠	220-240V	
57.	H00 312 007	PTT screw 4×6	2			
58.	R50 054 225	Bush	2			
59.	R50 265 150	Rod	1			
60.	Y50 061 706	Control cover	1			
61.	K83 170 228	Cord band	1			
62.	M45 017 228	Cord band	1			
63.	Y50 047 216	Transformer	1	⚠	230VAC	
64.	Y50 092 235	Capacitor	2	⚠	7μF·440VAC	
65.	H00 011 008	PT screw 4×8(BS)	2			
66.	H00 013 076	Lock washer	3			
67.	Y50 116 706	Earth fix plate	1			
68.	H00 154 005	PPT screw 4×12	2			
69.	K81 432 236	Terminal block	1	⚠	3P ML-20	
70.	Y50 108 226	Insulation plate	1			
71.	Y50 116 707	Circuit fix plate	1			
72.	Y50 116 368	Wiring diagram	1			
73.	H00 000 003	PP screw 4×8	2			
74.	Y50 116 171	Circuit board	1	⚠	LG-X02-E	
75.	X40 139 095	Spacer	4			
76.	Y50 121 215	Thermistor	1	⚠		
77.	D42 019 095	Spacer	4			
78.	M35 164 224	Cord clip	1			
79.	K82 163 225	Cord bush	2			
80.	K83 223 225	Bush	1			

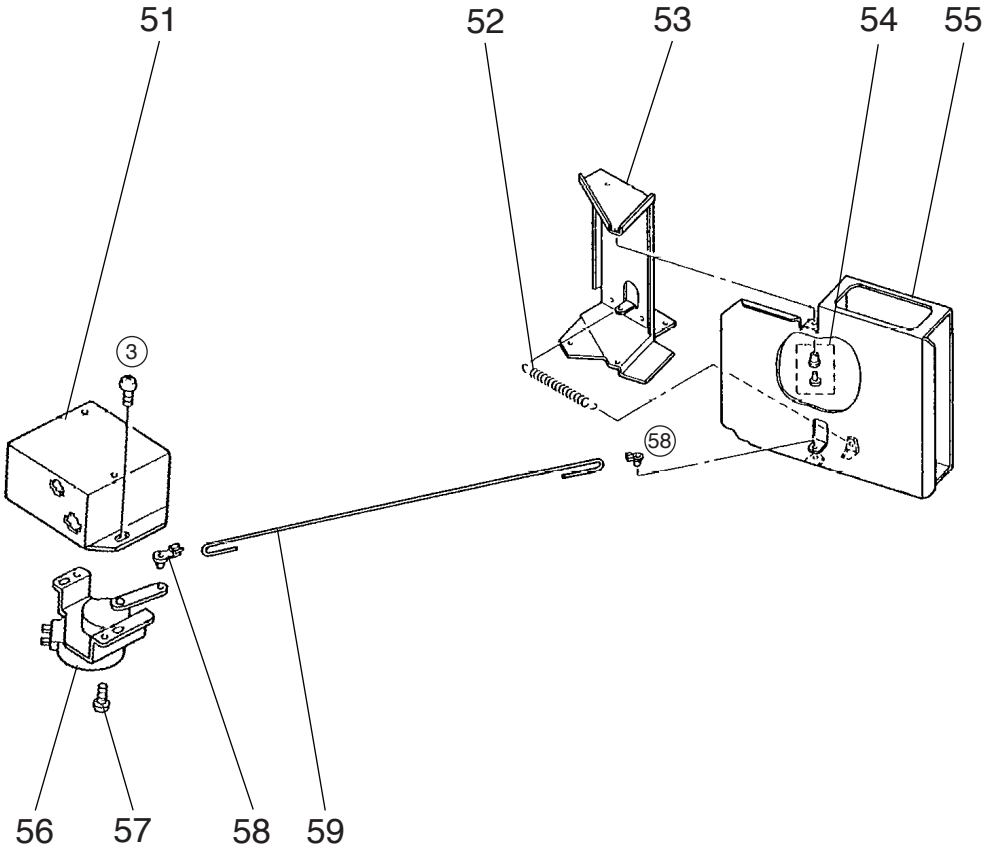
51
52
53
54
55
3
58
56
57
58
59

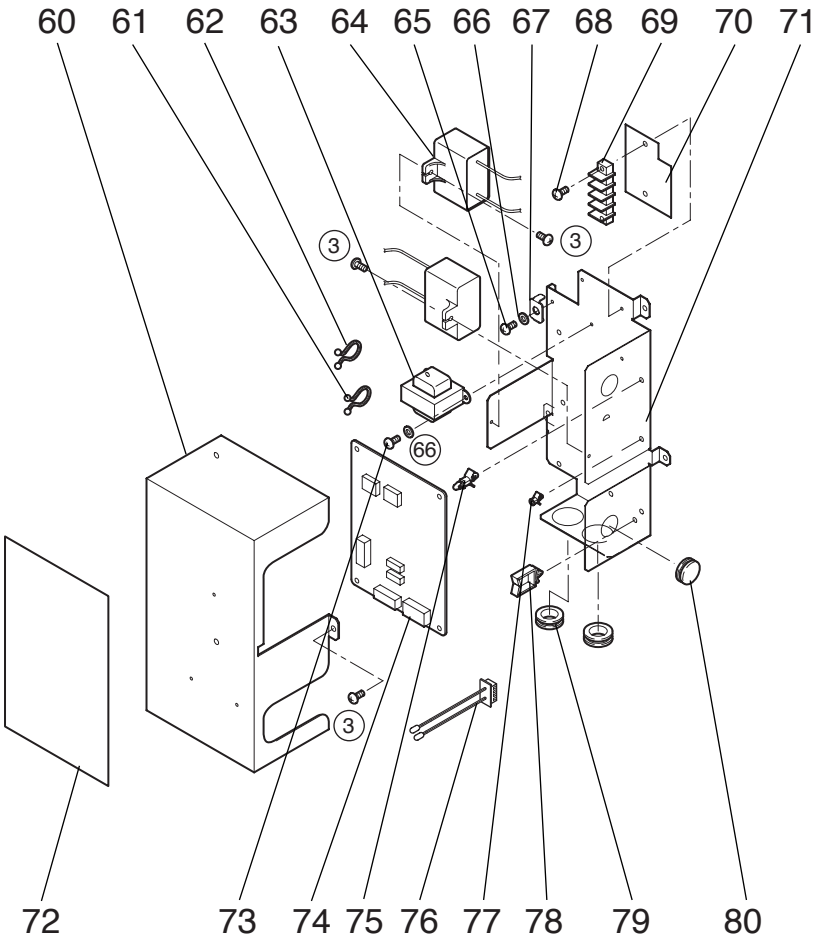
60
61
62
63
64
65
66
67
68
69
70
71
3
3
66
3
72
73
74
75
76
77
78
79
80

Model LGH-100RX4-E

No.	Parts No.	Name of part	Q'ty pcs/unit	Critical for safety	Remarks	Price
1.	H00 000 488	PTT screw 4×12	10			
2.	R50 430 609	Flange	2			
3.	H00 000 487	PTT screw 4×8	18			
4.	R50 095 380	Hanger	4			
5.	H00 000 244	PT screw 6×12	16			
6.	X50 004 707	Maintenance cover	1			
7.	R50 219 381	Core guide	1			
8.	Y50 063 718	Filter	2	⚠		
9.	R50 481 710	Lossnay core	2	⚠		
10.	R50 481 381	Core guide	1			
11.	R50 358 704	Cover	2			
12.	R50 466 344	Hinge	1			
13.	M34 074 017	Special screw 4×11	1			
14.	Y50 029 712	Fix plate	2			
15.	R50 483 704	Lead support	2			
16.	Y50 126 718	Sound absorbing material	1			
17.	Y50 021 609	Flange	2			

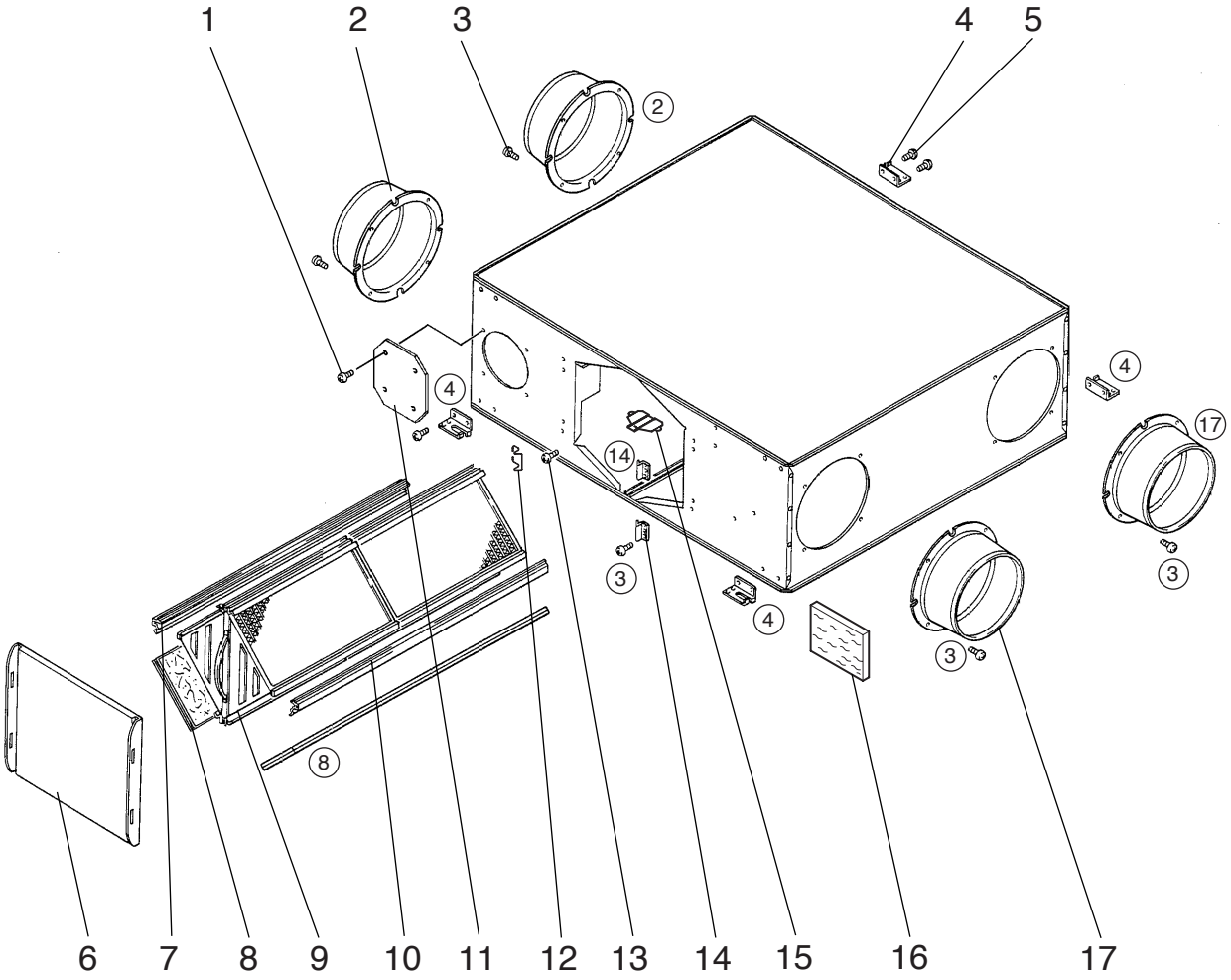

Model LGH-100RX4-E

No.	Parts No.	Name of part	Q'ty pcs/unit	Critical for safety	Remarks	Price
31.	R50 218 067	Special nut(12)	2			
32.	K83 466 113	Washer(12)	2			
33.	R50 479 480	Centrifugal fan	2	⚠	φ245	
34.	H00 157 008	PT screw 6×20	8			
35.	M34 043 080	Special washer	8			
36.	D40 135 095	Spacer	8			
37.	R50 217 225	Bush	8			
38.	R50 480 707	Fan base	2			
39.	Y50 033 104	Key	2		5×5×11.5	
40.	R50 264 711	Inlet plate	2			
41.	R50 264 712	Motor fix leg	2			
42.	H00 189 007	PTT screw 5×10	16			
43.	Y50 122 451	Motor	2	⚠		
44.	H00 061 050	Nut(6)	8			

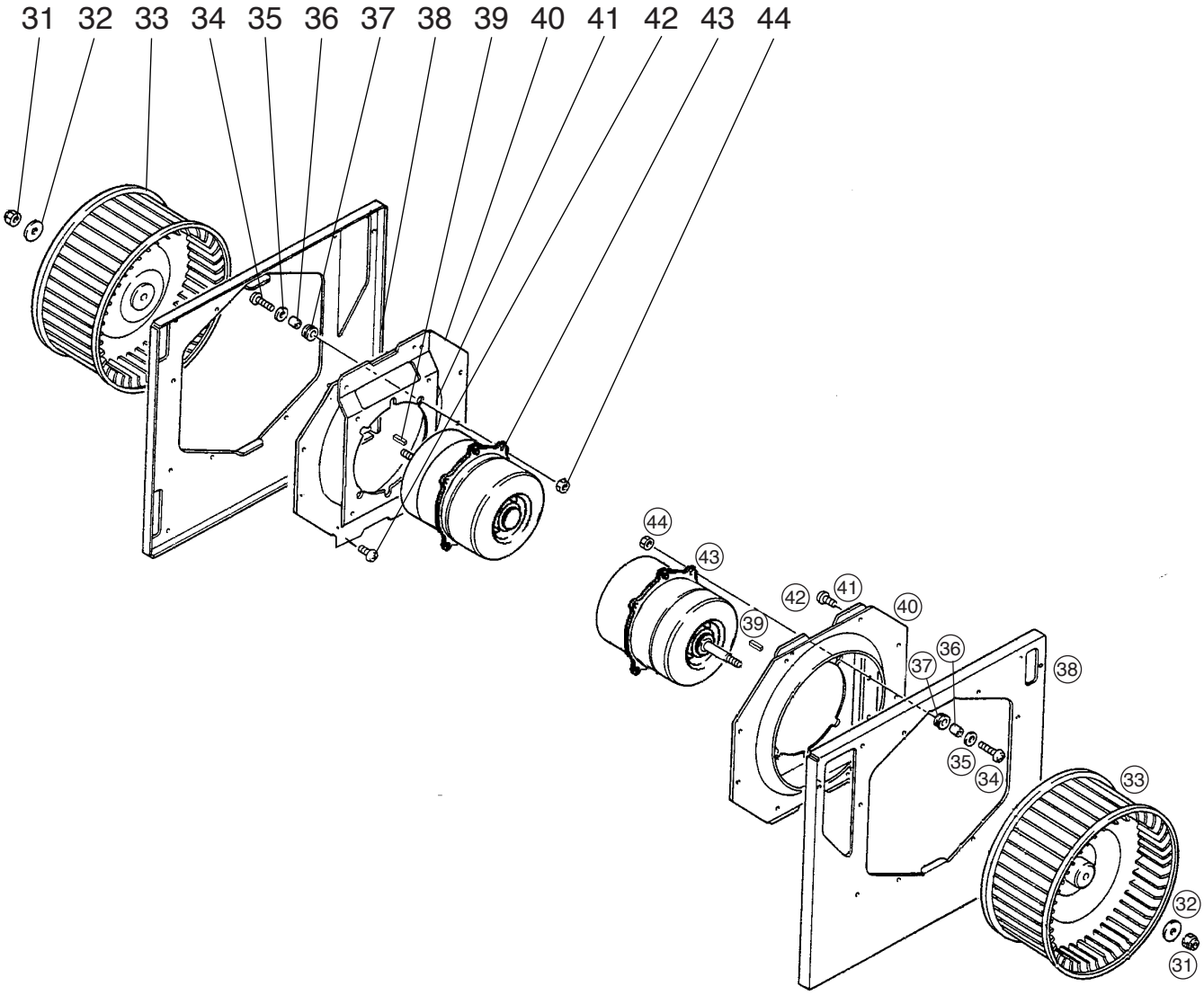

Model LGH-100RX4-E

No.	Parts No.	Name of part	Q'ty pcs/unit	Critical for safety	Remarks	Price
51.	Y50 061 693	Damper motor cover	1			
52.	R50 074 156	Pull spring	1			
53.	R50 473 715	Damper support	1			
54.	M31 234 089	Special bush	2			
55.	R50 473 716	Damper	1			
56.	Y50 061 260	Damper motor	1	⚠	220-240V	
57.	H00 312 007	PTT screw 4×6	2			
58.	R50 054 225	Bush	2			
59.	R50 265 150	Rod	1			
60.	Y50 061 706	Control cover	1			
61.	K83 170 228	Cord band	1			
62.	M45 017 228	Cord band	1			
63.	Y50 047 216	Transformer	1	⚠	230VAC	
64.	Y50 092 235	Capacitor	2	⚠	7μF·440VAC	
65.	H00 011 008	PT screw 4×8(BS)	2			
66.	H00 013 076	Lock washer	3			
67.	Y50 116 706	Earth fix plate	1			
68.	H00 154 005	PPT screw 4×12	2			
69.	K81 432 236	Terminal block	1	⚠	3P ML-20	
70.	Y50 108 226	Insulation plate	1			
71.	Y50 116 707	Circuit fix plate	1			
72.	Y50 116 368	Wiring diagram	1			
73.	H00 000 003	PP screw 4×8	2			
74.	Y50 116 171	Circuit board	1	⚠	LG-X02-E	
75.	X40 139 095	Spacer	4			
76.	Y50 122 215	Thermister	1	⚠		
77.	D42 019 095	Spacer	4			
78.	M35 164 224	Cord clip	1			
79.	K82 163 225	Cord bush	2			
80.	K83 223 225	Bush	1			

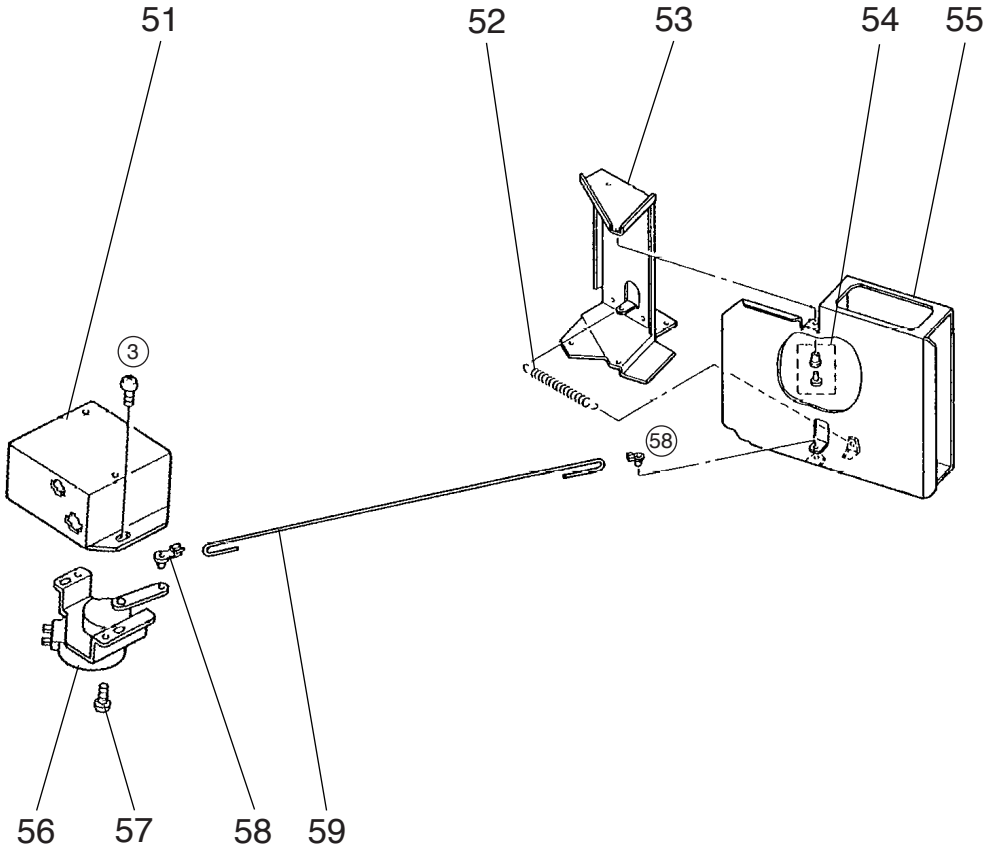
51
52
53
54
55
3
58
56
57
58
59

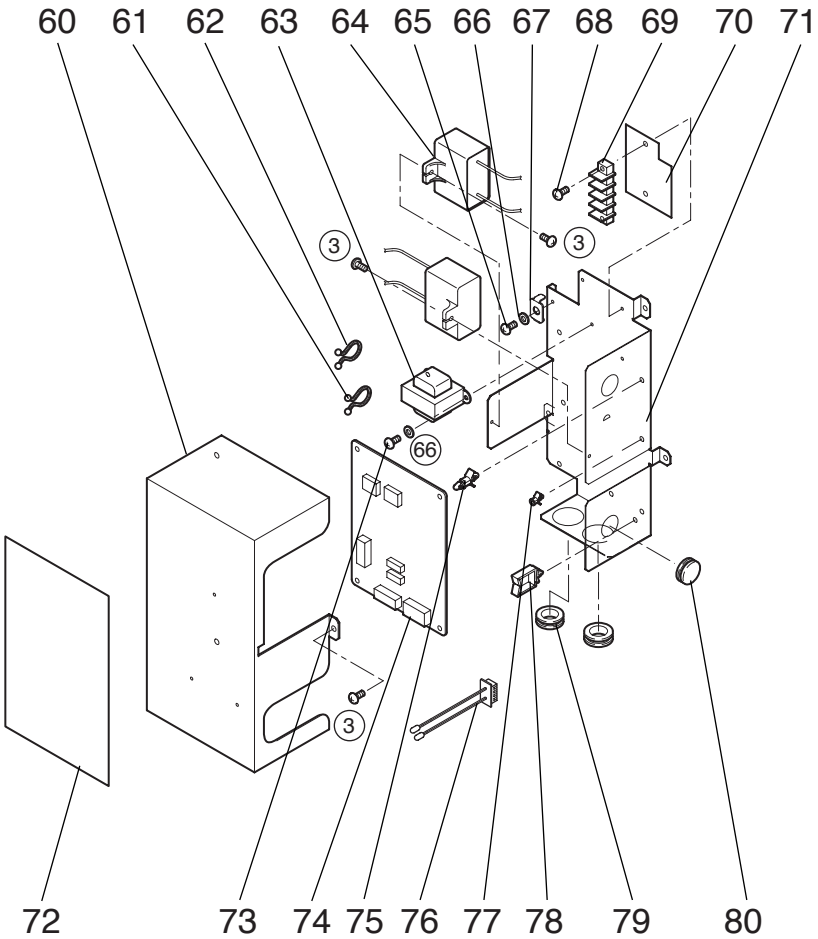
60
61
62
63
64
65
66
67
68
69
70
71
3
3
66
3
72
73
74
75
76
77
78
79
80

Model LGH-150RX4-E

No.	Parts No.	Name of part	Q'ty pcs/unit	Critical for safety	Remarks	Price
1.	Y50 123 704	Flange	2			
2.	H00 000 487	PTT screw 4×8	40			
3.	R50 466 344	Hinge	2			
4.	R50 111 381	Hanger	8			
5.	H00 000 244	PT screw 6×12	40			
6.	X50 004 707	Maintenance cover	2			
7.	R50 218 381	Core guide	2			
8.	Y50 063 717	Filter	4	⚠		
9.	R50 480 710	Lossnay core	4	⚠		
10.	R50 480 381	Core guide	2			
11.	M34 074 017	Special screw 4×11	2			
12.	Y50 029 712	Fix plate	4			
13.	R50 483 704	Lead support	4			
14.	Y50 126 718	Sound absorbing material	2			
15.	Y50 021 609	Flange	4			

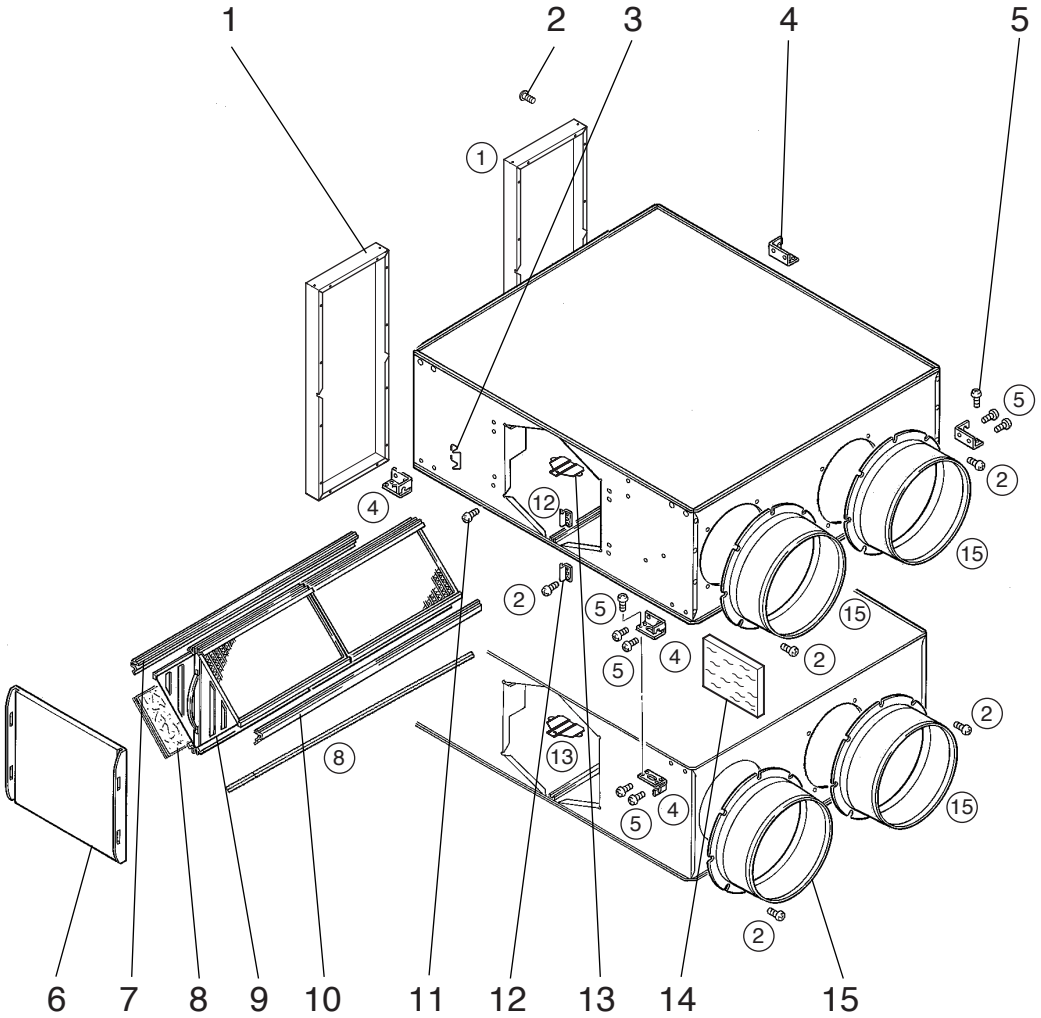

Model LGH-150RX4-E

No.	Parts No.	Name of part	Q'ty pcs/unit	Critical for safety	Remarks	Price
31.	R50 218 067	Special nut(12)	4			
32.	K83 466 113	Washer(12)	4			
33.	R50 479 480	Centrifugal fan	4	⚠	φ245	
34.	H00 157 008	PT screw 6×20	16			
35.	M34 043 080	Special washer	16			
36.	D40 135 095	Spacer	16			
37.	R50 217 225	Bush	16			
38.	R50 480 707	Fan base	4			
39.	Y50 033 104	Key	4		5×5×11.5	
40.	R50 264 711	Inlet plate	4			
41.	R50 264 712	Motor fix leg	4			
42.	H00 189 007	PTT screw 5×10	32			
43.	Y50 121 451	Motor	4	⚠		
44.	H00 061 050	Nut(6)	16			

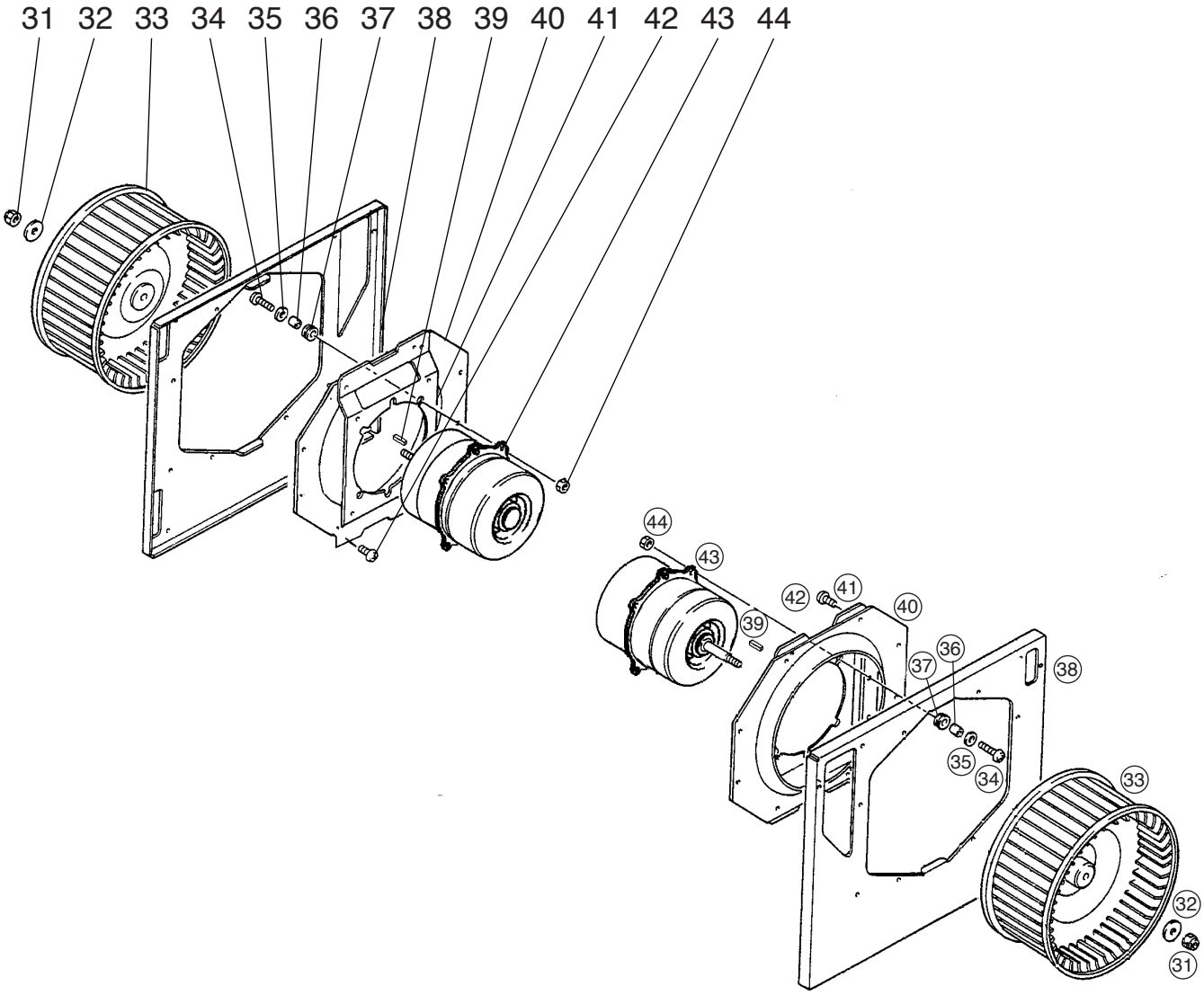

Model LGH-150RX4-E

No.	Parts No.	Name of part	Q'ty pcs/unit	Critical for safety	Remarks	Price
51.	Y50 061 693	Damper motor cover	2			
52.	R50 074 156	Pull spring	2			
53.	R50 473 715	Damper support	2			
54.	M31 234 089	Special bush	4			
55.	R50 473 716	Damper	2			
56.	Y50 123 260	Damper motor	2	⚠		
57.	H00 000 007	PPT screw 4×25	4			
58.	R50 271 150	Rod	2			
59.	H00 000 003	PP screw 4×8	6			
60.	H00 013 076	Lock washer	7			
61.	Y50 075 216	Transformer	2	⚠	AC220-240V	
62.	H00 000 487	P screw 4×8	8			
63.	Y50 092 235	Capacitor	4	⚠	7μF·440VAC	
64.	Y50 047 216	Transformer	1	⚠	230VAC	
65.	Y50 009 268	Relay	6	⚠		
66.	Y50 123 707	Control base	1			
67.	D41 093 223	Cord clip	3			
68.	Y50 123 171	Circuit board	1	⚠	LG-X02-E2	
69.	X40 139 095	Spacer	4			
70.	D42 019 095	Spacer	4			
71.	Y50 123 706	Earth fix plate	1			
72.	Y50 123 368	Wiring diagram	1			
73.	Y50 123 705	Control cover	1			
74.	M34 721 045	Special screw 4×10	2			
75.	H00 231 005	PPT screw 4×16	2			
76.	Y45 608 236	Teaminal block	1	⚠	ML-20-A37-3P	
77.	Y50 108 226	Insulation plate	1			
78.	H00 000 384	PPT screw 3×6	12			
79.	H00 011 008	PT screw 4×8(BS)	3			
80.	Y50 116 706	Earth fix plate	1			
81.	M35 698 223	Cord clip	2			
82.	Y50 123 215	Thermistor	1	⚠		
83.	R50 351 225	Bush	2			
84.	K82 163 225	Cord bush	1			

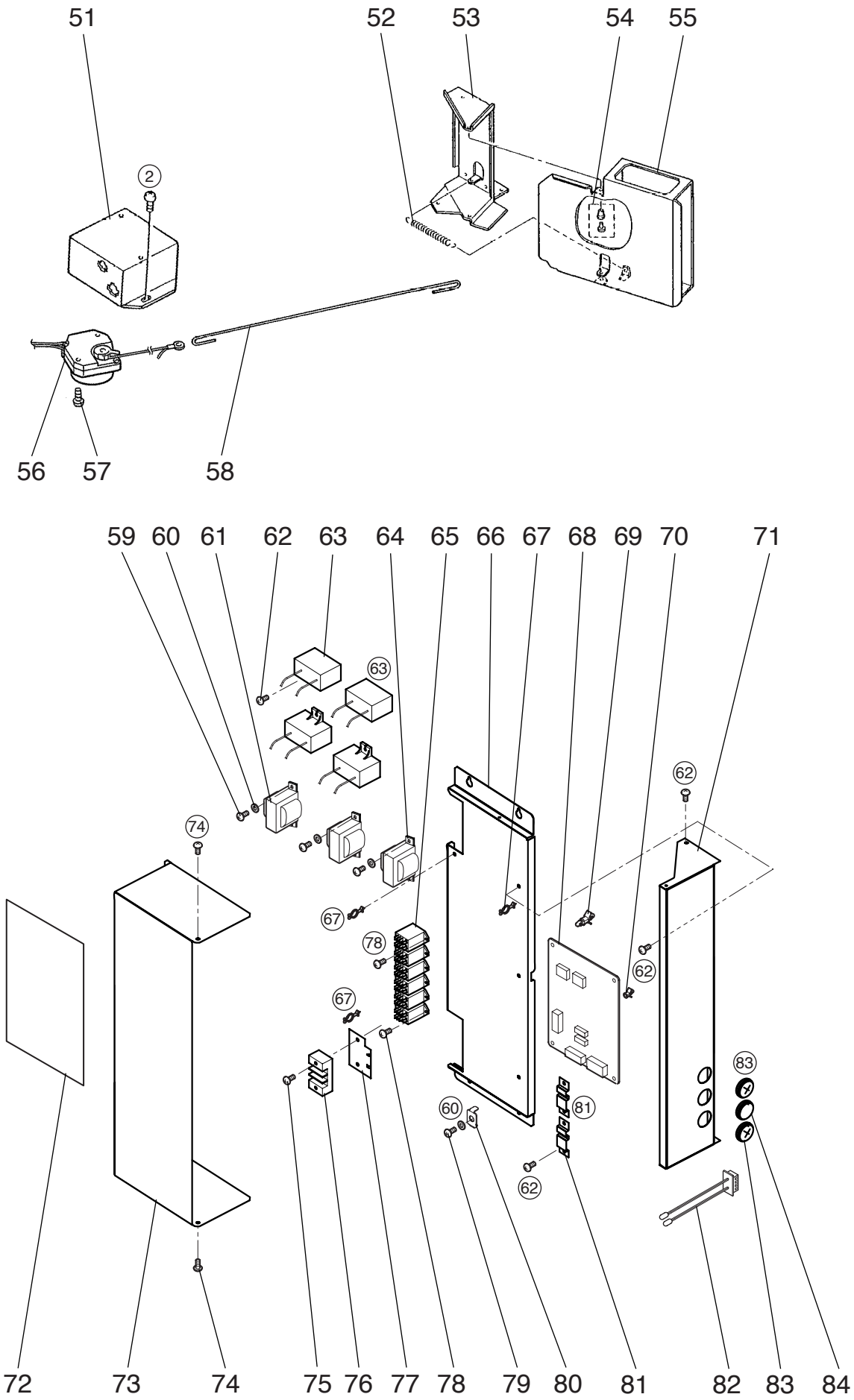
51
52
53
54
55
2
56
57
58
59
60
61
62
63
64
65
66
67
68
69
70
71
74
78
81
83
72
73
75
76
77
79
80
82
84

Model LGH-200RX4-E

No.	Parts No.	Name of part	Q'ty pcs/unit	Critical for safety	Remarks	Price
1.	Y50 123 704	Flange	2			
2.	H00 000 487	PTT screw 4×8	40			
3.	R50 466 344	Hinge	2			
4.	R50 111 381	Hanger	8			
5.	H00 000 244	PT screw 6×12	40			
6.	X50 004 707	Maintenance cover	2			
7.	R50 219 381	Core guide	2			
8.	Y50 063 718	Filter	4	⚠		
9.	R50 481 710	Lossnay core	4	⚠		
10.	R50 481 381	Core guide	2			
11.	M34 074 017	Special screw 4×11	2			
12.	Y50 029 712	Fix plate	4			
13.	R50 483 704	Lead support	4			
14.	Y50 126 718	Sound absorbing material	2			
15.	Y50 021 609	Flange	4			

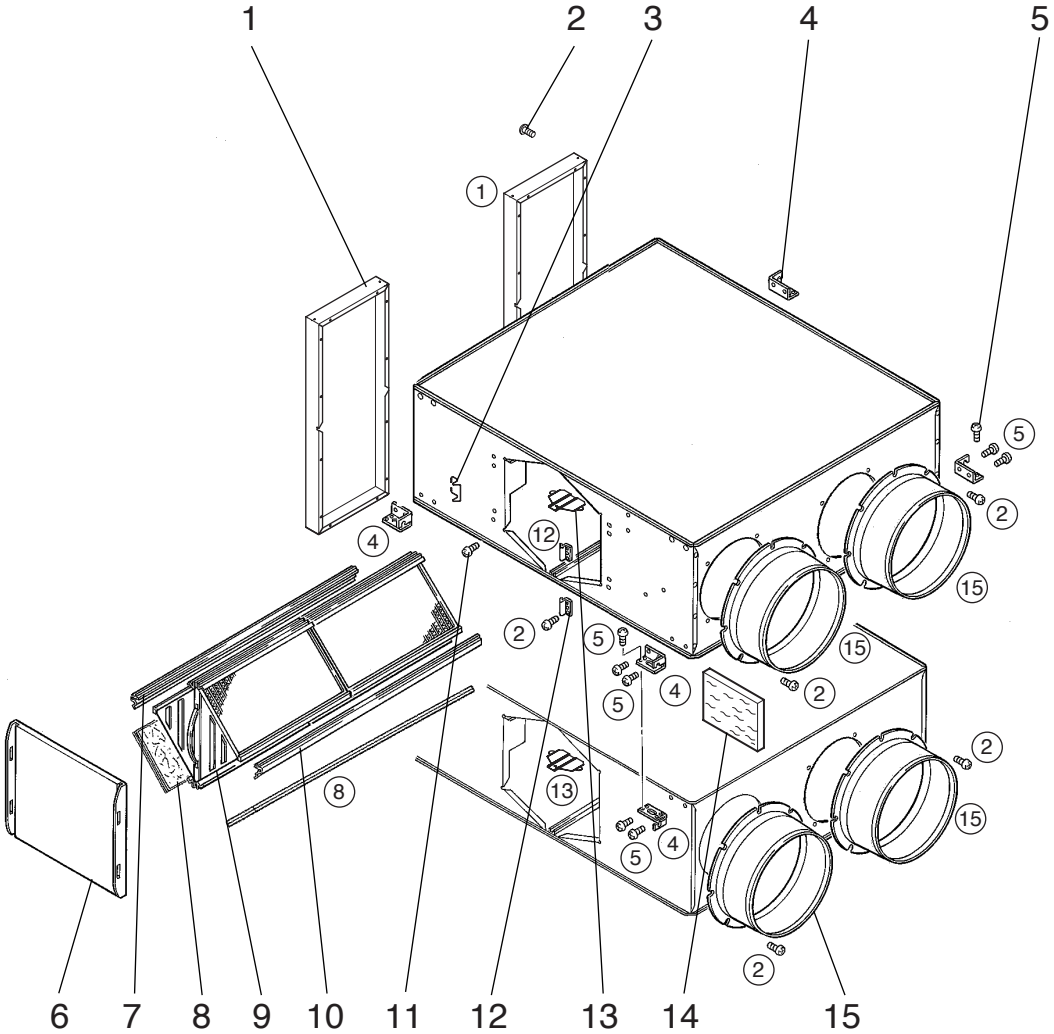

Model LGH-200RX4-E

No.	Parts No.	Name of part	Q'ty pcs/unit	Critical for safety	Remarks	Price
31.	R50 218 067	Special nut(12)	4			
32.	K83 466 113	Washer(12)	4			
33.	R50 479 480	Centrifugal fan	4	⚠	φ245	
34.	H00 157 008	PT screw 6×20	16			
35.	M34 043 080	Special washer	16			
36.	D40 135 095	Spacer	16			
37.	R50 217 225	Bush	16			
38.	R50 480 707	Fan base	4			
39.	Y50 033 104	Key	4		5×5×11.5	
40.	R50 264 711	Inlet plate	4			
41.	R50 264 712	Motor fix leg	4			
42.	H00 189 007	PTT screw 5×10	32			
43.	Y50 122 451	Motor	4	⚠		
44.	H00 061 050	Nut(6)	16			

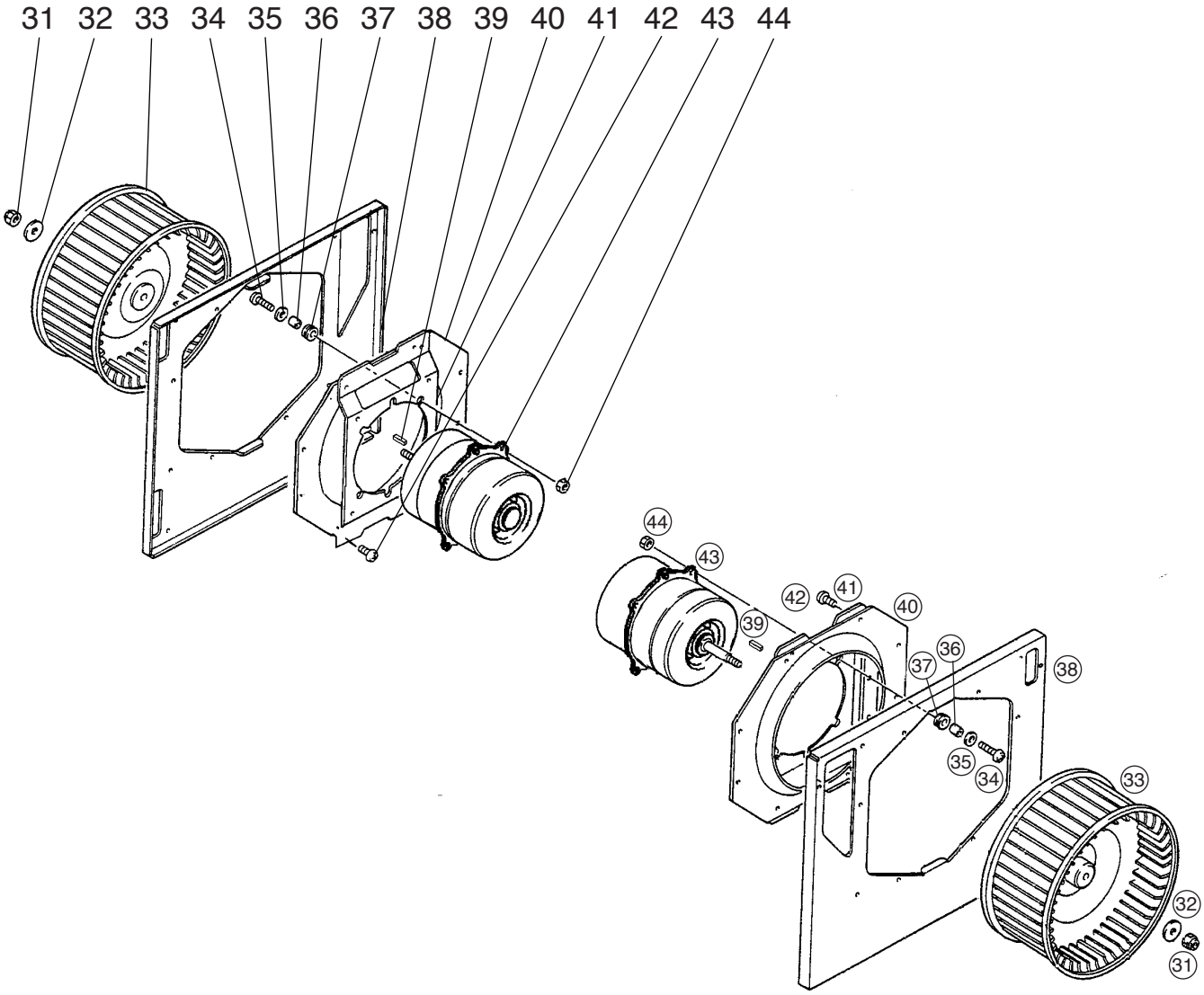

Model LGH-200RX4-E

No.	Parts No.	Name of part	Q'ty pcs/unit	Critical for safety	Remarks	Price
51.	Y50 061 693	Damper motor cover	2			
52.	R50 074 156	Pull spring	2			
53.	R50 473 715	Damper support	2			
54.	M31 234 089	Special bush	4			
55.	R50 473 716	Damper	2			
56.	Y50 123 260	Damper motor	2	⚠		
57.	H00 000 007	PPT screw 4×25	4			
58.	R50 271 150	Rod	2			
59.	H00 000 003	PP screw 4×8	6			
60.	H00 013 076	Lock washer	7			
61.	Y50 075 216	Transformer	2	⚠	AC220-240V	
62.	H00 000 487	PTT screw 4×8	8			
63.	Y50 092 235	Capacitor	4	⚠	7μF·440VAC	
64.	Y50 047 216	Transformer	1	⚠	230VAC	
65.	Y50 009 268	Relay	6	⚠		
66.	Y50 123 707	Control base	1			
67.	D41 093 223	Cord clip	3			
68.	Y50 123 171	Circuit board	1	⚠	LG-X02-E2	
69.	X40 139 095	Spacer	4			
70.	D42 019 095	Spacer	4			
71.	Y50 123 706	Earth fix plate	1			
72.	Y50 123 368	Wiring diagram	1			
73.	Y50 123 705	Control cover	1			
74.	M34 721 045	Special screw 4×10	2			
75.	H00 231 005	PPT screw 4×16	2			
76.	Y45 608 236	Teaminal block	1	⚠	ML-20-A37-3P	
77.	Y50 108 226	Insulation plate	1			
78.	H00 000 384	PPT screw 3×6	12			
79.	H00 011 008	PT screw 4×8(BS)	3			
80.	Y50 116 706	Earth fix plate	1			
81.	M35 698 223	Cord clip	2			
82.	Y50 124 215	Thermistor	1	⚠		
83.	R50 351 225	Bush	2			
84.	K82 163 225	Cord bush	1			

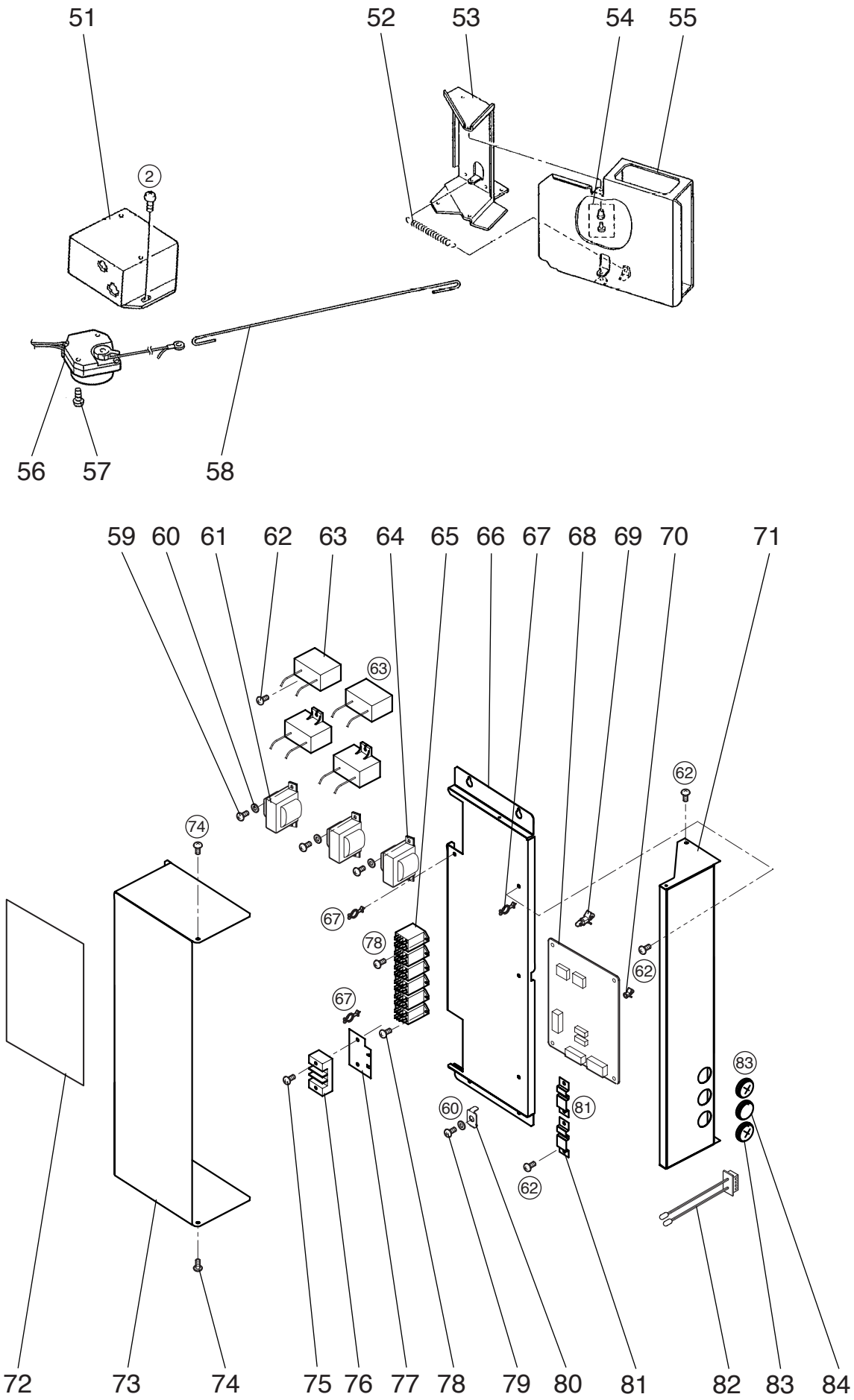
51
52
53
54
55
2
56
57
58
59
60
61
62
63
64
65
66
67
68
69
70
71
74
78
81
83
72
73
75
76
77
79
80
82
84

Printed in Japan
March, 2006
35 <MEE>