Changes for the Better

SERVICE PARTS LIST FOR MITSUBISHI ELECTRIC PACKAGED AIR-CONDITIONERS

Series PQRY-P•YGM-A

For use with the R410A

July 2005

INDEX	
Heat exchanger unit	Composing unit model
PQRY-P400YGM-A	PQRY-P400YSGM-A
PQRY-P500YGM-A	PQRY-P500YSGM-A

MITSUBISHI ELECTRIC

PQRY-P400YGM-A
PQRY-P500YGM-A

EXTERNAL PARTS

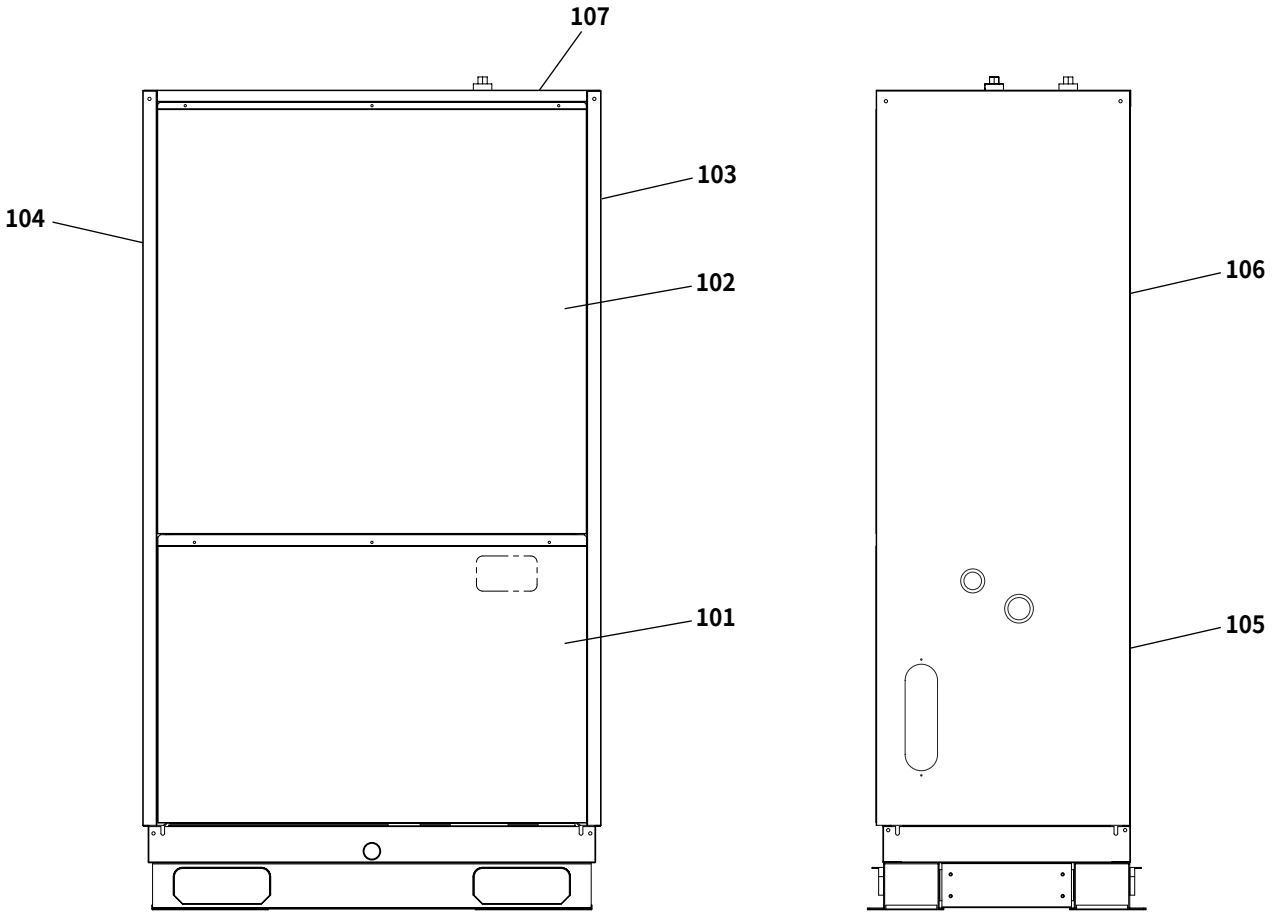

No.	Part No.	Part Name	Spec.	-P400YGM-A	-P500YGM-A		Dwg. No.	Price
101	R61 9F2 651	Front panel 1 assy		1	1		W660979G02	
102	R61 4F3 652	Front panel 2 assy		1	1		W660980G02	
103	R61 9F2 661	Side panel R assy		1	1		W661857G02	
104	R61 9F3 661	Side panel L assy		1	1		W661858G02	
105	R61 4F3 678	Rear panel 1 assy		1	1		W660981G01	
106	R61 4F3 676	Rear panel 2 assy		1	1		W660982G02	
107	R61 9F2 642	Top panel		1	1		W660925H01	

FUNCTIONAL PARTS

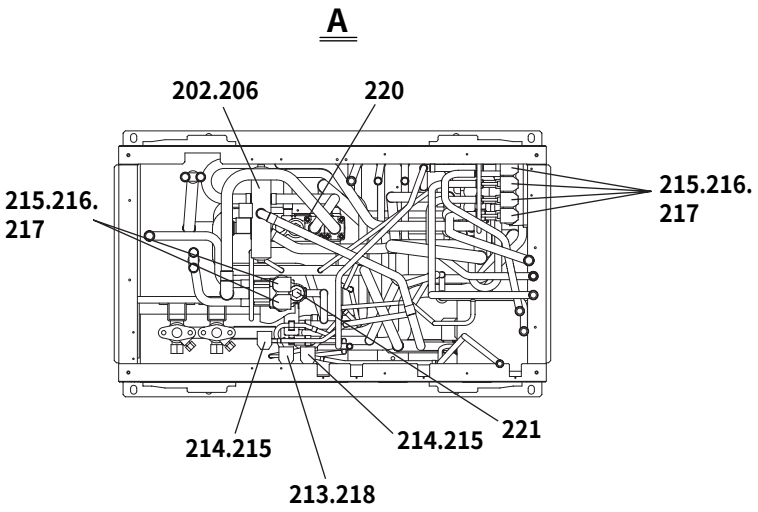

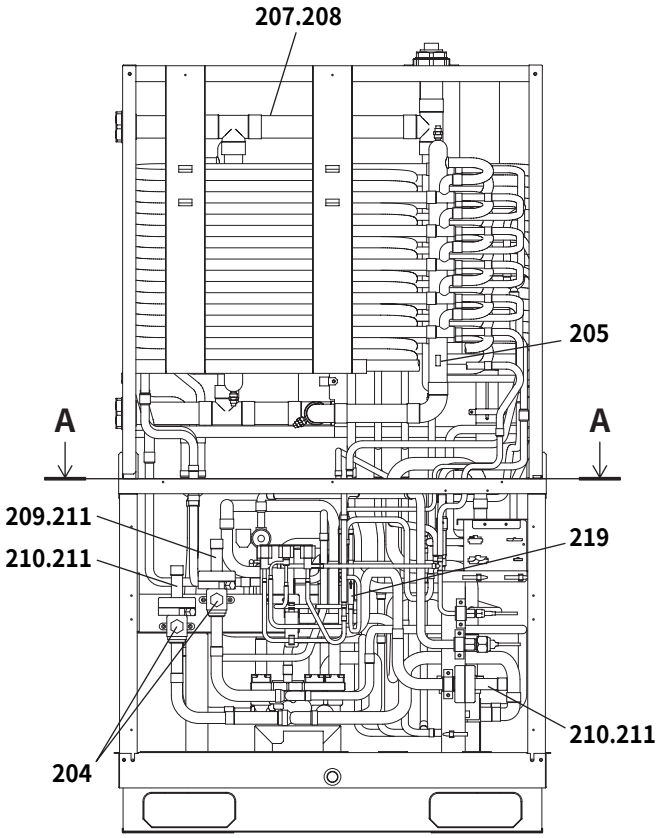

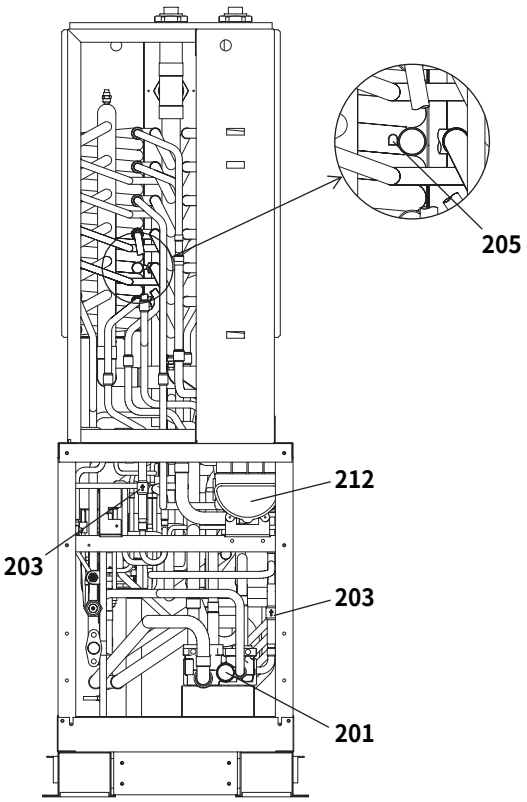

FUNCTIONAL PARTS

No.	Part No.	Part Name	Spec.	-P400YGM-A	-P500YGM-A		Dwg. No.	Price
201	R61 6A7 418	Check valve block assy		1	1		W276816G01	
202	R61 R34 154	Four way valve		1	1		P633114X01	
203	R61 R43 418	Check valve		2	2		P639165X01	
204	R61 R40 410	Ball valve		2	2		P636309X01	
205	R61 670 202	Thermistor	NTH3A14 <TH6,TH9>	2	2		P425496X01	
206	R61 Y12 242	Four way valve coil	<21S4a>	1	1		P633106X01	
207	R61 9F2 480	Heat exchanger assy		1			W278629G02	
208	R61 9F3 480	Heat exchanger assy			1		W277941G02	
209	R61 9F2 441	Pipe assy		1	1		W663334G02	
210	R61 9F2 442	Pipe assy		2	2		W663334G04	
211	R61 F14 514	Packing		3	3		P321009X01	
212	R61 6A7 232	Solenoid valve block assy		1	1		W654369G01	
213	R61 R34 232	Solenoid valve	<SV7c>	1	1		P631279X01	
214	R61 4F3 232	Solenoid valve	<SV7a,SV7b>	2	2		P631290X01	
215	R61 Y18 243	Solenoid valve coil	<SV4a~4d,SV5a,SV5b,SV7a,SV7b>	8	8		P472012X01	
216	R61 6A7 235	Solenoid valve ACS		6	6		P631285X01	
217	R61 6A7 245	Fasten part for solenoid valve		1	1		W909209G01	
218	R61 Y17 243	Solenoid valve coil	<SV7c>	1	1		P472020X01	
219	R61 M05 418	Check valve		1	1		P639147X01	
220	R61 7A7 418	Check valve block assy		1	1		W276812G01	
221	R61 7A7 232	Solenoid valve block assy		1	1		W658302G02	

MITSUBISHI ELECTRIC CORPORATION
HEAD OFFICE: MITSUBISHI DENKI BLDG., 2-2-3, MARUNOUCHI, CHIYODA-KU, TOKYO 100-8310, JAPAN

BWE05180 (20050731)