Changes for the Better

SERVICE PARTS LIST FOR MITSUBISHI ELECTRIC PACKAGED AIR-CONDITIONERS

Series : PEFY-P•VMS1-ER2.TH
PEFY-P•VMS1L-ER1.TH

REVISED

Jan. 2013

BWE1141B

INDEX

PEFY-P15VMS1-ER2.TH	PEFY-P15VMS1L-ER1.TH
PEFY-P20VMS1-ER2.TH	PEFY-P20VMS1L-ER1.TH
PEFY-P25VMS1-ER2.TH	PEFY-P25VMS1L-ER1.TH
PEFY-P32VMS1-ER2.TH	PEFY-P32VMS1L-ER1.TH
PEFY-P40VMS1-ER2.TH	PEFY-P40VMS1L-ER1.TH
PEFY-P50VMS1-ER2.TH	PEFY-P50VMS1L-ER1.TH
PEFY-P63VMS1-ER2.TH	PEFY-P63VMS1L-ER1.TH

MITSUBISHI ELECTRIC

Part information update day : **2013/01/21**

Please change the old catalog (issued Jan. 2013, No.BWE1141A) to this new catalog.
Content of revision : Some of parts are changed.

EXTERNAL PARTS

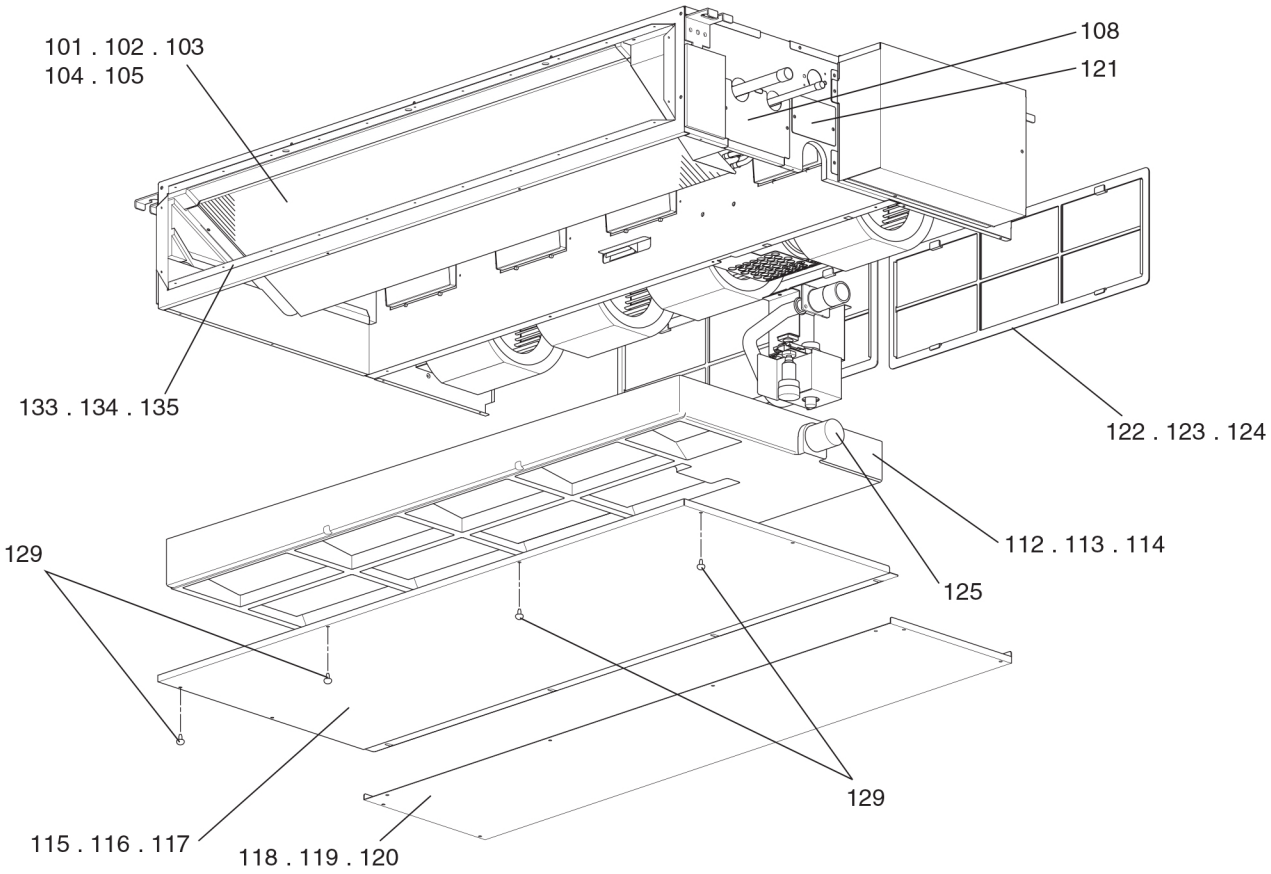

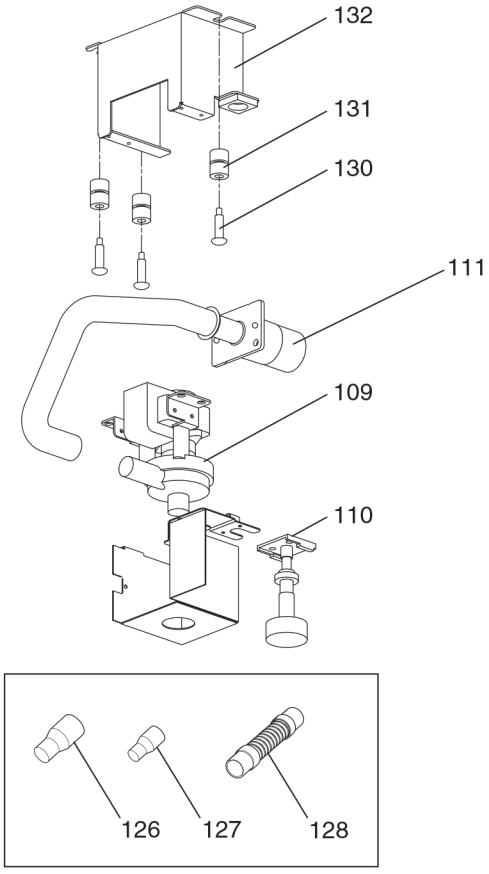

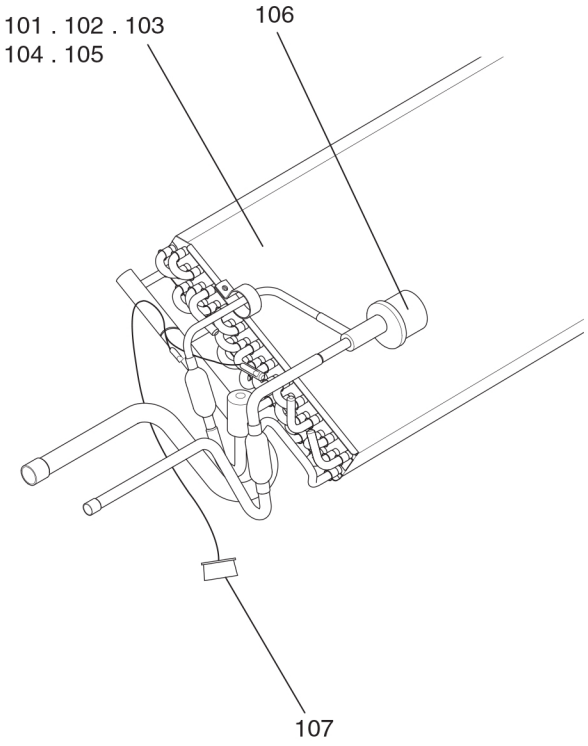

PEFY-P15,P20,P25,P32,P40,P50,P63VMS1-ER2.TH
PEFY-P15,P20,P25,P32,P40,P50,P63VMS1L-ER1.TH

EXTERNAL PARTS

No.	Part No.	G : RoHS Apply Only W : RoHS Apply by Running Change	Part Name	Spec.	PEFY-P15VMS1-ER2.TH	PEFY-P20VMS1-ER2.TH	PEFY-P25VMS1-ER2.TH	PEFY-P32VMS1-ER2.TH	PEFY-P40VMS1-ER2.TH	PEFY-P50VMS1-ER2.TH	Dwg. No.	Notes for the models	Revision info.
101	E17 402 620	G	HEAT EXCHANGER		1						KB00A079B01		
102	E17 403 620	G	HEAT EXCHANGER			1	1				KB00A082B01		
103	E17 405 620	G	HEAT EXCHANGER					1			KB00A080B01		
104	E17 406 620	G	HEAT EXCHANGER						1	1	KB00A081B01		
105	E17 408 620	G	HEAT EXCHANGER								KB00A075B01		
106	E17 409 640	G	LINEAR EXPANSION VALVE	EFM-40YGMD-1	1	1	1	1	1	1	KB50B472H01		
107	E17 319 307	G	THERMISTOR		1	1	1	1	1	1	RG71V202G01		
108	E17 319 690	G	COVER PIPE ASSY		1	1	1	1	1	1	KB00H214G02		
109	E17 409 355	G	PUMP	PLD	1	1	1	1	1	1	KB56B515H02		
110	E17 409 145	G	FLOAT SWITCH		1	1	1	1	1	1	BH68C952H02		
111	E17 409 704	G	SOCKET ASSY		1	1	1	1	1	1	KB00G754G01		
112	E17 319 700	G	DRAIN PAN S ASSY		1	1	1	1			KB00G775G19		
113	E17 320 700	G	DRAIN PAN M ASSY						1	1	KB00G775G20		
114	E17 326 700	G	DRAIN PAN L ASSY								KB00G775G21		
115	E17 319 717	G	PANEL UNDER 1 S ASSY		1	1	1	1			KB00G776G07		
116	E17 321 717	G	PANEL UNDER 1 M ASSY						1	1	KB00G776G08		
117	E17 326 717	G	PANEL UNDER 1 L ASSY								KB00G776G09		
118	E17 319 718	G	PANEL UNDER 2 S		1	1	1	1			KB02B455G02		
119	E17 320 718	G	PANEL UNDER 2 M						1	1	KB02B457G01		
120	E17 326 718	G	PANEL UNDER 2 L								KB02A071G02		
121	E17 409 690	G	COVER ASSY		1	1	1	1	1	1	KB00H222G03		
122	E17 319 100	G	FILTER 15		1	1	1	1			KB35B272G02		
123	E17 320 100	G	FILTER 40						1	1	KB35B207G02		
124	E17 326 100	G	FILTER 63								KB35B208G02		
125	E17 414 524	G	PLUG	RUBBER	1	1	1	1	1	1	KB26H049H01		
126	E17 407 204	G	REDUCER	12.7-15.88						1	KB14H395G02		
127	E17 414 204	G	REDUCER	6.35-9.52						1	KB14H390G02		
128	E17 319 702	G	DRAIN HOSE		1	1	1	1	1	1	KB27T150H02		
129	E17 319 250	G	SCREW ASSY		3	3	3	3	4	4	KB12H389G01		
130	E17 548 250	G	SCREW SPECIAL	M4×6	3	3	3	3	3	3	Z003Z333H05		
131	DB26F013L01	G	CUSHION		3	3	3	3	3	3	DB26F013L01		
132	KB00M769G02	G	ATTACHMENT PUMP		1	1	1	1	1	1	KB00M769G02		
133	E17 319 800	G	PANEL DUCT S ASSY		1	1	1	1			KB00G751G07		
134	E17 320 800	G	PANEL DUCT M ASSY						1	1	KB00G751G08		
135	E17 326 800	G	PANEL DUCT L ASSY								KB00G751G09		

EXTERNAL PARTS

No.	Part No.	G : RoHS Apply Only W : RoHS Apply by Running Change	Part Name	Spec.	PEFY-P63VMS1-ER2.TH	PEFY-P15VMS1L-ER1.TH	PEFY-P20VMS1L-ER1.TH	PEFY-P25VMS1L-ER1.TH	PEFY-P32VMS1L-ER1.TH	PEFY-P40VMS1L-ER1.TH	Dwg. No.	Notes for the models	Revision info.
101	E17 402 620	G	HEAT EXCHANGER			1					KB00A079B01		
102	E17 403 620	G	HEAT EXCHANGER				1	1			KB00A082B01		
103	E17 405 620	G	HEAT EXCHANGER						1		KB00A080B01		
104	E17 406 620	G	HEAT EXCHANGER							1	KB00A081B01		
105	E17 408 620	G	HEAT EXCHANGER		1						KB00A075B01		
106	E17 409 640	G	LINEAR EXPANSION VALVE	EFM-40YGMD-1	1	1	1	1	1	1	KB50B472H01		
107	E17 319 307	G	THERMISTOR		1	1	1	1	1	1	RG71V202G01		
108	E17 319 690	G	COVER PIPE ASSY		1	1	1	1	1	1	KB00H214G02		
109	E17 409 355	G	PUMP	PLD	1						KB56B515H02		
110	E17 409 145	G	FLOAT SWITCH		1						BH68C952H02		
111	E17 409 704	G	SOCKET ASSY		1						KB00G754G01		
112	E17 319 700	G	DRAIN PAN S ASSY			1	1	1	1		KB00G775G19		
113	E17 320 700	G	DRAIN PAN M ASSY							1	KB00G775G20		
114	E17 326 700	G	DRAIN PAN L ASSY		1						KB00G775G21		
115	E17 319 717	G	PANEL UNDER 1 S ASSY			1	1	1	1		KB00G776G07		
116	E17 321 717	G	PANEL UNDER 1 M ASSY							1	KB00G776G08		
117	E17 326 717	G	PANEL UNDER 1 L ASSY		1						KB00G776G09		
118	E17 319 718	G	PANEL UNDER 2 S			1	1	1	1		KB02B455G02		
119	E17 320 718	G	PANEL UNDER 2 M							1	KB02B457G01		
120	E17 326 718	G	PANEL UNDER 2 L		1						KB02A071G02		
121	E17 409 690	G	COVER ASSY		1						KB00H222G03		
122	E17 319 100	G	FILTER 15			1	1	1	1		KB35B272G02		
123	E17 320 100	G	FILTER 40							1	KB35B207G02		
124	E17 326 100	G	FILTER 63		2						KB35B208G02		
125	E17 414 524	G	PLUG	RUBBER	1						KB26H049H01		
126	E17 407 204	G	REDUCER	12.7-15.88							KB14H395G02		
127	E17 414 204	G	REDUCER	6.35-9.52							KB14H390G02		
128	E17 319 702	G	DRAIN HOSE		1	1	1	1	1	1	KB27T150H02		
129	E17 319 250	G	SCREW ASSY		4	3	3	3	3	4	KB12H389G01		
130	E17 548 250	G	SCREW SPECIAL	M4×6	3						Z003Z333H05		
131	DB26F013L01	G	CUSHION		3						DB26F013L01		
132	KB00M769G02	G	ATTACHMENT PUMP		1						KB00M769G02		
133	E17 319 800	G	PANEL DUCT S ASSY			1	1	1	1		KB00G751G07		
134	E17 320 800	G	PANEL DUCT M ASSY							1	KB00G751G08		
135	E17 326 800	G	PANEL DUCT L ASSY		1						KB00G751G09		

EXTERNAL PARTS

No.	Part No.	G : RoHS Apply Only W : RoHS Apply by Running Change	Part Name	Spec.	PEFY-P50VMS1L-ER1.TH	PEFY-P63VMS1L-ER1.TH					Dwg. No.	Notes for the models	Revision info.
101	E17 402 620	G	HEAT EXCHANGER								KB00A079B01		
102	E17 403 620	G	HEAT EXCHANGER								KB00A082B01		
103	E17 405 620	G	HEAT EXCHANGER								KB00A080B01		
104	E17 406 620	G	HEAT EXCHANGER		1						KB00A081B01		
105	E17 408 620	G	HEAT EXCHANGER			1					KB00A075B01		
106	E17 409 640	G	LINEAR EXPANSION VALVE	EFM-40YGMD-1	1	1					KB50B472H01		
107	E17 319 307	G	THERMISTOR		1	1					RG71V202G01		
108	E17 319 690	G	COVER PIPE ASSY		1	1					KB00H214G02		
109	E17 409 355	G	PUMP	PLD							KB56B515H02		
110	E17 409 145	G	FLOAT SWITCH								BH68C952H02		
111	E17 409 704	G	SOCKET ASSY								KB00G754G01		
112	E17 319 700	G	DRAIN PAN S ASSY								KB00G775G19		
113	E17 320 700	G	DRAIN PAN M ASSY		1						KB00G775G20		
114	E17 326 700	G	DRAIN PAN L ASSY			1					KB00G775G21		
115	E17 319 717	G	PANEL UNDER 1 S ASSY								KB00G776G07		
116	E17 321 717	G	PANEL UNDER 1 M ASSY		1						KB00G776G08		
117	E17 326 717	G	PANEL UNDER 1 L ASSY			1					KB00G776G09		
118	E17 319 718	G	PANEL UNDER 2 S								KB02B455G02		
119	E17 320 718	G	PANEL UNDER 2 M		1						KB02B457G01		
120	E17 326 718	G	PANEL UNDER 2 L			1					KB02A071G02		
121	E17 409 690	G	COVER ASSY								KB00H222G03		
122	E17 319 100	G	FILTER 15								KB35B272G02		
123	E17 320 100	G	FILTER 40		1						KB35B207G02		
124	E17 326 100	G	FILTER 63			2					KB35B208G02		
125	E17 414 524	G	PLUG	RUBBER							KB26H049H01		
126	E17 407 204	G	REDUCER	12.7-15.88	1						KB14H395G02		
127	E17 414 204	G	REDUCER	6.35-9.52	1						KB14H390G02		
128	E17 319 702	G	DRAIN HOSE		1	1					KB27T150H02		
129	E17 319 250	G	SCREW ASSY		4	4					KB12H389G01		
130	E17 548 250	G	SCREW SPECIAL	M4×6							Z003Z333H05		
131	DB26F013L01	G	CUSHION								DB26F013L01		
132	KB00M769G02	G	ATTACHMENT PUMP								KB00M769G02		
133	E17 319 800	G	PANEL DUCT S ASSY								KB00G751G07		
134	E17 320 800	G	PANEL DUCT M ASSY		1						KB00G751G08		
135	E17 326 800	G	PANEL DUCT L ASSY			1					KB00G751G09		

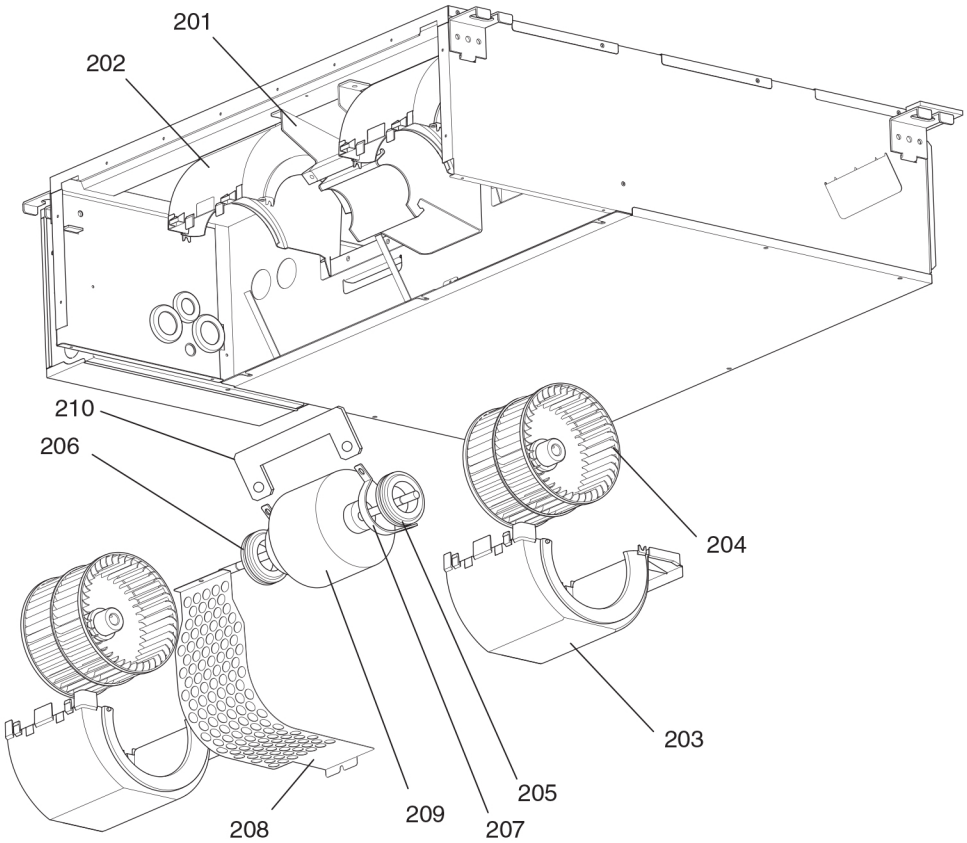
201
202
210
206
204
203
205
209
207
208

PEFY-P15,P20,P25,P32VMS1-ER2.TH BLOWER PARTS (1)
PEFY-P15,P20,P25,P32VMS1L-ER1.TH

No.	Part No.	G : RoHS Apply Only W : RoHS Apply by Running Change	Part Name	Spec.	PEFY-P15VMS1-ER2.TH	PEFY-P20VMS1-ER2.TH	PEFY-P25VMS1-ER2.TH	PEFY-P32VMS1-ER2.TH	PEFY-P15VMS1L-ER1.TH	PEFY-P20VMS1L-ER1.TH	Dwg. No.	Notes for the models	Revision info.
201	E17 319 128	G	MOTOR BASE		1	1	1	1	1	1	KB02B464G02		
202	E17 319 129	G	FAN CASE A ASSY		2	2	2	2	2	2	KB00G773G03		
203	E17 320 129	G	FAN CASE B ASSY		2	2	2	2	2	2	KB00G774G03		
204	E17 319 500	G	SIROCCO FAN ASSY		2	2	2	2	2	2	KB00H341G01		
205	E17 319 505	G	RUBBER MOUNT L		1	1	1	1	1	1	KB31D833H03		
206	E17 320 505	G	RUBBER MOUNT R		1	1	1	1	1	1	KB31D833H04		
207	KB02H047G02	G	ATTACHMENT		2	2	2	2	2	2	KB02H047G02		
208	E17 319 513	G	MOTOR COVER ASSY		1	1	1	1	1	1	KB00H600G02		
209	E17 783 300	G	MOTOR		1	1	1	1	1	1	KB61B503H03		
210	KB02U467G01	G	ATTACHMENT(M-LOCK)		1	1	1	1	1	1	KB02U467G01		

PEFY-P15,P20,P25,P32VMS1-ER2.TH BLOWER PARTS (1)
PEFY-P15,P20,P25,P32VMS1L-ER1.TH

No.	Part No.	G : RoHS Apply Only W : RoHS Apply by Running Change	Part Name	Spec.	PEFY-P25VMS1L-ER1.TH	PEFY-P32VMS1L-ER1.TH					Dwg. No.	Notes for the models	Revision info.
201	E17 319 128	G	MOTOR BASE		1	1					KB02B464G02		
202	E17 319 129	G	FAN CASE A ASSY		2	2					KB00G773G03		
203	E17 320 129	G	FAN CASE B ASSY		2	2					KB00G774G03		
204	E17 319 500	G	SIROCCO FAN ASSY		2	2					KB00H341G01		
205	E17 319 505	G	RUBBER MOUNT L		1	1					KB31D833H03		
206	E17 320 505	G	RUBBER MOUNT R		1	1					KB31D833H04		
207	KB02H047G02	G	ATTACHMENT		2	2					KB02H047G02		
208	E17 319 513	G	MOTOR COVER ASSY		1	1					KB00H600G02		
209	E17 783 300	G	MOTOR		1	1					KB61B503H03		
210	KB02U467G01	G	ATTACHMENT(M-LOCK)		1	1					KB02U467G01		

BLOWER PARTS (2)

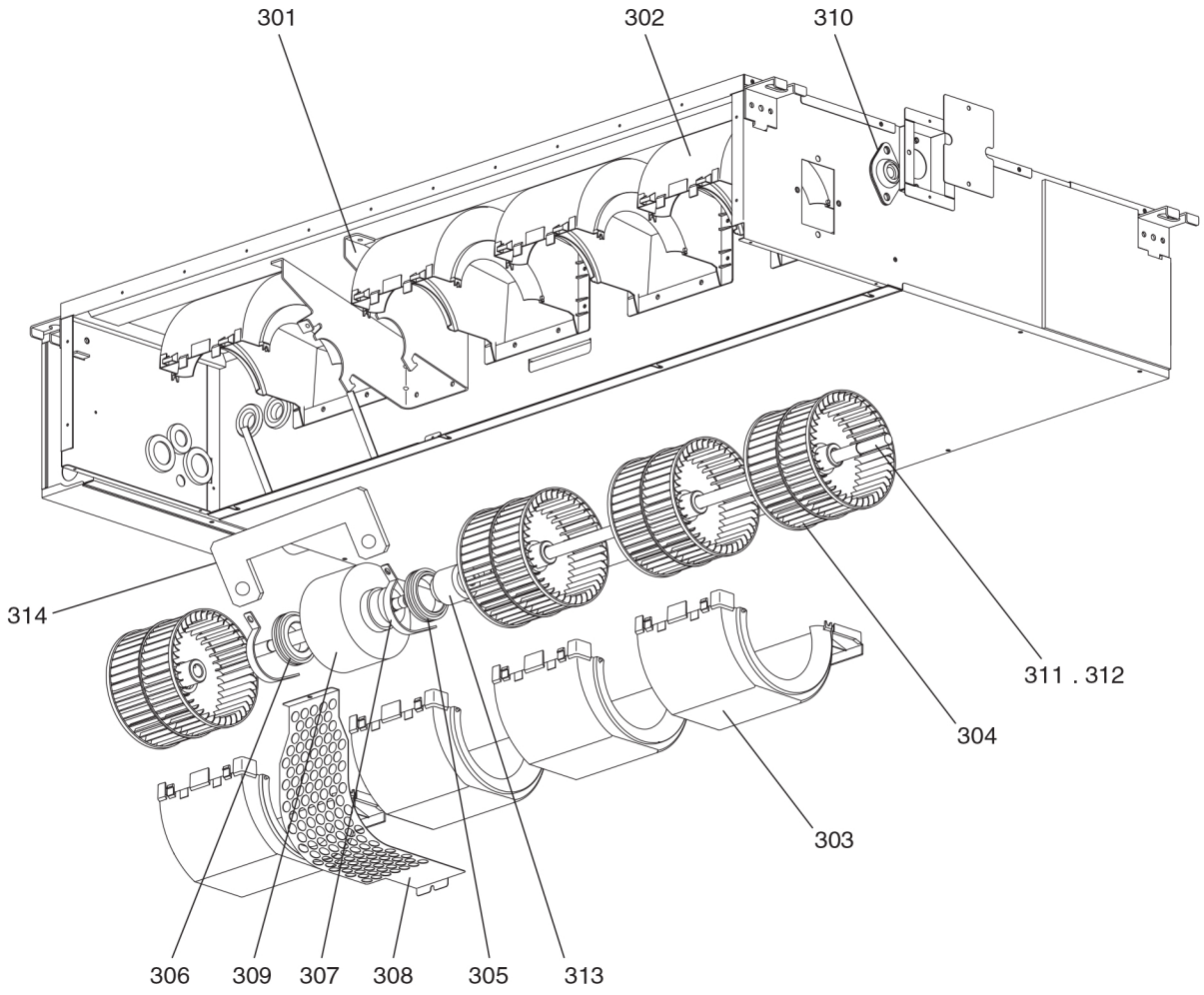

PEFY-P40,P50,P63VMS1-ER2.TH BLOWER PARTS (2)
PEFY-P40,P50,P63VMS1L-ER1.TH

No.	Part No.	G : RoHS Apply Only W : RoHS Apply by Running Change	Part Name	Spec.	PEFY-P40VMS1-ER2.TH	PEFY-P50VMS1-ER2.TH	PEFY-P63VMS1-ER2.TH	PEFY-P40VMS1L-ER1.TH	PEFY-P50VMS1L-ER1.TH	PEFY-P63VMS1L-ER1.TH	Dwg. No.	Notes for the models	Revision info.
301	E17 319 128	G	MOTOR BASE		1	1	1	1	1	1	KB02B464G02		
302	E17 319 129	G	FAN CASE A ASSY		3	3	4	3	3	4	KB00G773G03		
303	E17 320 129	G	FAN CASE B ASSY		3	3	4	3	3	4	KB00G774G03		
304	E17 319 500	G	SIROCCO FAN ASSY		3	3	4	3	3	4	KB00H341G01		
305	E17 319 505	G	RUBBER MOUNT L		1	1	1	1	1	1	KB31D833H03		
306	E17 320 505	G	RUBBER MOUNT R		1	1	1	1	1	1	KB31D833H04		
307	KB02H047G02	G	ATTACHMENT		2	2	2	2	2	2	KB02H047G02		
308	E17 319 513	G	MOTOR COVER ASSY		1	1	1	1	1	1	KB00H600G02		
309	E17 788 300	G	MOTOR		1	1	1	1	1	1	KB61B504H03		
310	E17 321 509	G	BEARING		1	1	1	1	1	1	KB58C793G01		
311	E17 321 499	G	SHAFT 3FAN		1	1		1	1		KB10B485H03		
312	E17 326 499	G	SHAFT 4FAN				1			1	KB10B486H03		
313	E17 321 518	G	FAN JOINT ASSY		1	1	1	1	1	1	KB00R475G01		
314	KB02U467G01	G	ATTACHMENT(M-LOCK)		1	1	1	1	1	1	KB02U467G01		

CONTROL BOX PARTS

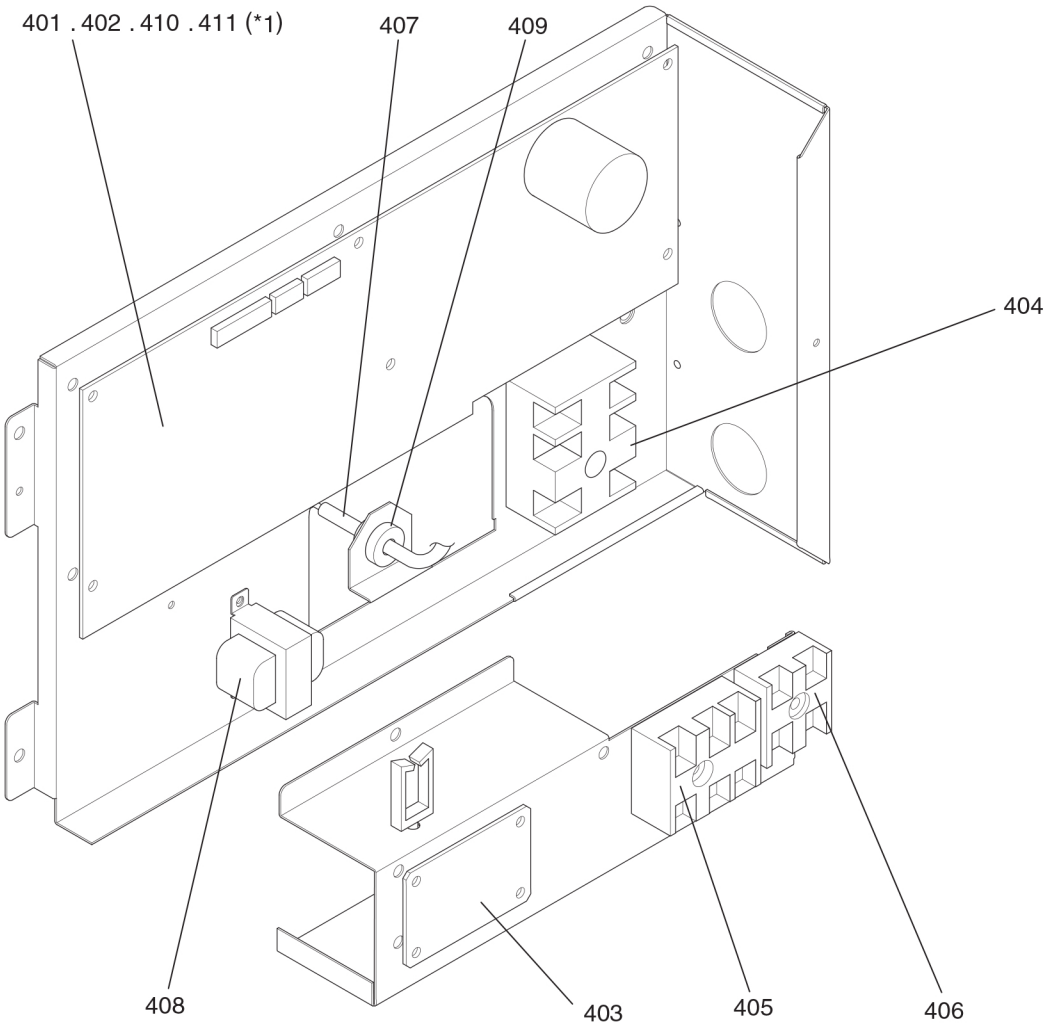

*1 Both parts No. 401 and No. 402 cannot be used with the indoor units with a production number of 2ZM***** or later.
Use parts No. 410 or No. 411 instead.
Those parts No. 401, No. 402, No. 410, and No. 411 can be used with the units with a production number of 2YM***** or earlier.
If the production number of the indoor unit is not available, procure parts No. 410 or No. 411.

Serial No.

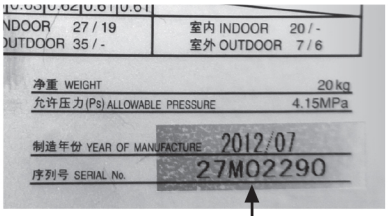

Serial No.

2 7 M 0 2 2 9 0

Running number

Production month

Production year
In this case, July / 2012

Production month / year

2	4	April / 2012
2	5	May / 2012
2	6	June / 2012
2	7	July / 2012
2	8	August / 2012
2	9	September / 2012
2	X	October / 2012
2	Y	November / 2012
2	Z	December / 2012
3	1	January / 2013
3	2	February / 2013
3	3	March / 2013
3	4	April / 2013
3	5	May / 2013

CONTROL BOX PARTS

No.	Part No.	G : RoHS Apply Only W : RoHS Apply by Running Change	Part Name	Spec.	PEFY-P15VMS1-ER2.TH	PEFY-P20VMS1-ER2.TH	PEFY-P25VMS1-ER2.TH	PEFY-P32VMS1-ER2.TH	PEFY-P40VMS1-ER2.TH	PEFY-P50VMS1-ER2.TH	Dwg. No.	Notes for the models	Revision info.
401	E17 402 447	G	PRINTED CIRCUIT ASSEMBLY	INDOOR	1	1	1	1	1	1	KE01D280B01	*1	
402	E17 403 447	G	PRINTED CIRCUIT ASSEMBLY	INDOOR							KE01D280B02	*1	
403	E17 402 456	G	PRINTED CIRCUIT ASSEMBLY	ADRESS BOARD	1	1	1	1	1	1	KE01D281B01		
404	E17 155 375	G	TERMINAL BLOCK ASSY		1	1	1	1	1	1	BG00R200G26		
405	E17 154 375	G	TERMINAL BLOCK ASSY		1	1	1	1	1	1	BH00C267G04		
406	E17 156 375	G	TERMINAL BLOCK ASSY		1	1	1	1	1	1	BG00R200G62		
407	E17 319 308	G	THERMISTOR S	250XAP	1	1	1	1	1	1	RG71J628H01		
408	E17 408 337	G	REACTOR	CHM							KE65D276H01		
409	E17 319 013	G	BUSH	SRB-R-2	1	1	1	1	1	1	KB32K138H01		
410	E17 881 447	G	PRINTED CIRCUIT ASSEMBLY	INDOOR	1	1	1	1	1	1	KE01D280B11	*1	
411	E17 888 447	G	PRINTED CIRCUIT ASSEMBLY	INDOOR							KE01D280B12	*1	

CONTROL BOX PARTS

No.	Part No.	G : RoHS Apply Only W : RoHS Apply by Running Change	Part Name	Spec.	PEFY-P63VMS1-ER2.TH	PEFY-P15VMS1L-ER1.TH	PEFY-P20VMS1L-ER1.TH	PEFY-P25VMS1L-ER1.TH	PEFY-P32VMS1L-ER1.TH	PEFY-P40VMS1L-ER1.TH	Dwg. No.	Notes for the models	Revision info.
401	E17 402 447	G	PRINTED CIRCUIT ASSEMBLY	INDOOR	1						KE01D280B01	*1	
402	E17 403 447	G	PRINTED CIRCUIT ASSEMBLY	INDOOR		1	1	1	1	1	KE01D280B02	*1	
403	E17 402 456	G	PRINTED CIRCUIT ASSEMBLY	ADRESS BOARD	1	1	1	1	1	1	KE01D281B01		
404	E17 155 375	G	TERMINAL BLOCK ASSY		1	1	1	1	1	1	BG00R200G26		
405	E17 154 375	G	TERMINAL BLOCK ASSY		1	1	1	1	1	1	BH00C267G04		
406	E17 156 375	G	TERMINAL BLOCK ASSY		1	1	1	1	1	1	BG00R200G62		
407	E17 319 308	G	THERMISTOR S	250XAP	1	1	1	1	1	1	RG71J628H01		
408	E17 408 337	G	REACTOR	CHM	1						KE65D276H01		
409	E17 319 013	G	BUSH	SRB-R-2	1	1	1	1	1	1	KB32K138H01		
410	E17 881 447	G	PRINTED CIRCUIT ASSEMBLY	INDOOR	1						KE01D280B11	*1	
411	E17 888 447	G	PRINTED CIRCUIT ASSEMBLY	INDOOR		1	1	1	1	1	KE01D280B12	*1	

CONTROL BOX PARTS

No.	Part No.	G : RoHS Apply Only W : RoHS Apply by Running Change	Part Name	Spec.	PEFY-P50VMS1L-ER1.TH	PEFY-P63VMS1L-ER1.TH					Dwg. No.	Notes for the models	Revision info.
401	E17 402 447	G	PRINTED CIRCUIT ASSEMBLY	INDOOR							KE01D280B01	*1	
402	E17 403 447	G	PRINTED CIRCUIT ASSEMBLY	INDOOR	1	1					KE01D280B02	*1	
403	E17 402 456	G	PRINTED CIRCUIT ASSEMBLY	ADRESS BOARD	1	1					KE01D281B01		
404	E17 155 375	G	TERMINAL BLOCK ASSY		1	1					BG00R200G26		
405	E17 154 375	G	TERMINAL BLOCK ASSY		1	1					BH00C267G04		
406	E17 156 375	G	TERMINAL BLOCK ASSY		1	1					BG00R200G62		
407	E17 319 308	G	THERMISTOR S	250XAP	1	1					RG71J628H01		
408	E17 408 337	G	REACTOR	CHM		1					KE65D276H01		
409	E17 319 013	G	BUSH	SRB-R-2	1	1					KB32K138H01		
410	E17 881 447	G	PRINTED CIRCUIT ASSEMBLY	INDOOR							KE01D280B11	*1	
411	E17 888 447	G	PRINTED CIRCUIT ASSEMBLY	INDOOR	1	1					KE01D280B12	*1	

MITSUBISHI ELECTRIC CORPORATION
HEAD OFFICE: TOKYO BLDG., 2-7-3, MARUNOUCHI, CHIYODA-KU, TOKYO 100-8310, JAPAN

BWE1141B (20130131)